CITY OF DULUTH
PURCHASING DIVISION
Room 120 City Hall
411 West First Street
Duluth, Minnesota 55802-1199
218/730-5340
purchasing@duluthmn.gov

Addendum 1
File # 19-17AA
RFP Professional Services for 2020 Street Preservation Project

This addendum serves to notify all bidders of the following changes to the solicitation documents:

1. The City of Duluth 2018 Street Preservation project no. 1690 sample plan is included to clarify the plan deliverable to City by consultant.
2. Maps of the project streets are included for reference.

Please acknowledge receipt of this Addendum by returning a copy of it with your proposal. This page will not be included in the page count.

Posted: September 23, 2019.

MINNESOTA DEPARTMENT OF TRANSPORTATION

CITY OF DULUTH

DEPARTMENT OF PUBLIC WORKS AND UTILITIES
ENGINEERING DIVISION

CONSTRUCTION PLAN FOR : MILL & OVERLAY, RECLAIMING, CURB & GUTTER, SIDEWALKS, ADA IMPROVEMENTS,

LOCATED ON: W. ANOKA ST., BRISTOL ST., CLOVER ST., E. 8TH ST., HIGHLAND ST., MAXWELL AVE.

MAXWELL STREET AND W. ANOKA STREET

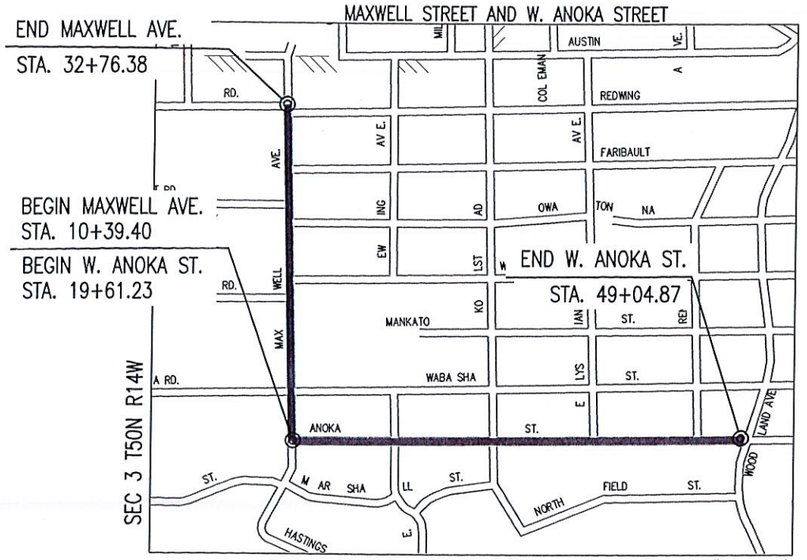

SCALE: 1" = 1000'

CLOVER STREET AND E. 8TH STREET.

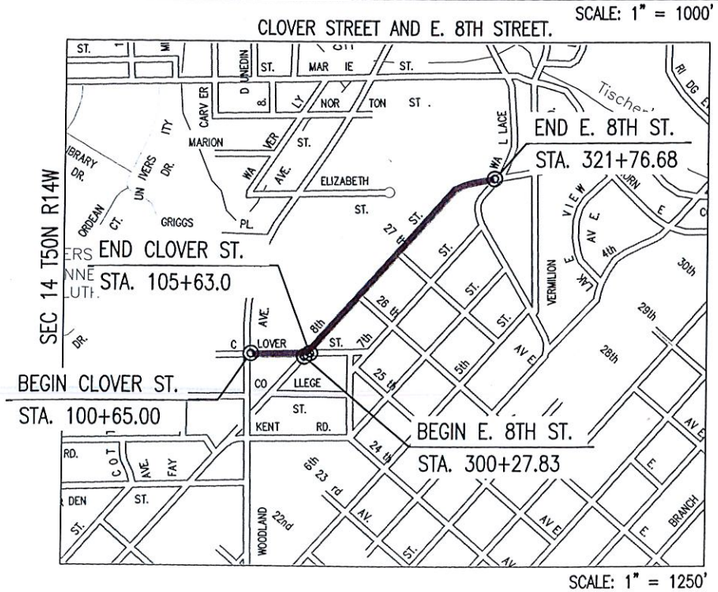

SCALE: 1" = 1250'

HIGHLAND STREET, CENTRAL AVE. AND BRISTOL ST.

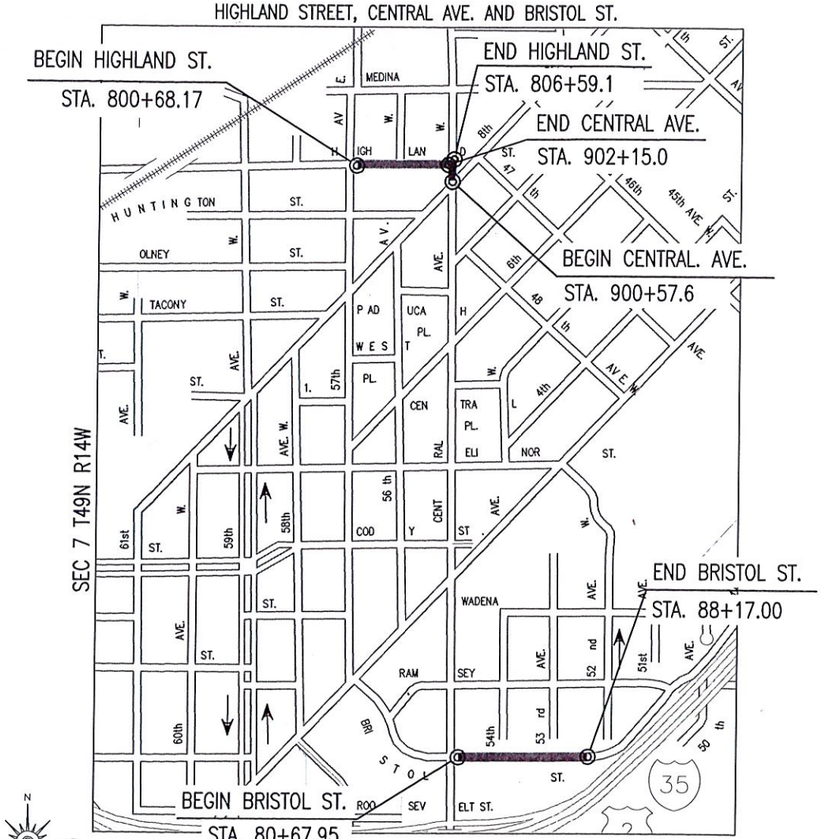

SCALE: 1" = 1000'

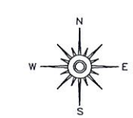

SCALE: 1" = 2250'

PLAN REVISIONS		
DATE	SHEET NO.	APPROVER

WARNING:
LOCATION OF UNDERGROUND UTILITIES TO BE VERIFIED BY CONTRACTOR.
CALL BEFORE DIGGING. GOPHER STATE ONE CALL 1-800-252-1166
REQUIRED BY LAW

GOVERNING SPECIFICATIONS

THE 2016 EDITION OF THE MINNESOTA DEPARTMENT OF TRANSPORTATION "STANDARD SPECIFICATIONS FOR CONSTRUCTION" SHALL GOVERN.
AVAILABLE AT:
http://www.dot.state.mn.us/pre-letting/spec/index.html

THE 2017 EDITION OF
THE CITY OF DULUTH PUBLIC WORKS AND UTILITIES DEPARTMENT
CONSTRUCTION STANDARDS AND SUPPLEMENTS OR ADDENDUMS SHALL APPLY.
AVAILABLE AT:
http://www.duluthmn.gov/engineering/standard-construction-specifications/

ALL TRAFFIC CONTROL DEVICES AND SIGNING SHALL CONFORM TO THE MN MUTCD, INCLUDING THE FIELD MANUAL DATED JANUARY 2014
AVAILABLE AT:
http://www.dot.state.mn.us/trafficeng/publ/fieldmanual/index.html

THE SUBSURFACE UTILITY INFORMATION IN THIS PLAN IS UTILITY LEVEL D. THIS QUALITY LEVEL WAS DETERMINED ACCORDING TO THE GUIDELINES OF CI/ASCE 38-02, ENTITLED "STANDARD GUIDELINES FOR THE COLLECTION AND DEPICTION OF EXISTING SUBSURFACE UTITLITY DATA".

INDEX

THIS PLAN CONTAINS 36 SHEETS

CITY OF DULUTH PROJECT NO. 1690

GROSS LENGTH	8990.24	FEET	1.703	MILES
W. ANOKA ST.	2943.6'	FEET	0.557	MILES
BRISTOL ST.	748.85	FEET	0.142	MILES
CENTRAL ST.	157.4	FEET	0.030	MILES
CLOVER ST.	410.26	FEET	0.078	MILES
HIGHLAND ST.	590.9	FEET	0.112	MILES
E. 8TH ST.	1902.25	FEET	0.360	MILES
MAXWELL ST.	2236.98	FEET	0.424	MILES
EXCEPTIONS-LENGTH	0	FEET	0	MILES
NET LENGTH	8990.24	FEET	1.703	MILES

I HEREBY CERTIFY THAT THIS PLAN WAS PREPARED BY ME OR UNDER MY DIRECT SUPERVISION AND THAT I AM A DULY LICENSED PROFESSIONAL ENGINEER UNDER THE LAWS OF THE STATE OF MINNESOTA.

PRINT NAME: PATRICK LOOMIS LICENSE # 49099

DATE: 5/3/18 SIGNATURE: Patrick Loomis

DESIGN TEAM P.LOOMIS, D.KRATOCHWILL, S.ANDERSON

CITY OF DULUTH APPROVALS

RECOMMENDED FOR APPROVAL 5/3 20 18
CHIEF ENGINEER OF TRANSPORTATION

RECOMMENDED FOR APPROVAL 5/3 20 18
CHIEF ENGINEER OF UTILITIES

RECOMMENDED FOR APPROVAL 5/3 20 18
CITY ENGINEER

STATEMENT OF ESTIMATED QUANTITIES

LINE	NOTES	CHART	SHEET	SPEC. NO	DESCRIPTION	UNIT	TOTAL PROJECT ESTIMATED QUANTITY	ANOKA SECTION ESTIMATED QUANTITY	MAXWELL SECTION ESTIMATED QUANTITY	BRISTOL SECTION ESTIMATED QUANTITY	CLOVER SECTION ESTIMATED QUANTITY	EIGHTH ST SECTION ESTIMATED QUANTITY	CENTRAL AVE. HIGHLAND ST SECTION ESTIMATED QUANTITY
1				2021.501	MOBILIZATION	LUMP SUM	1	0.2	0.2	0.2	0.2	0.2	0.2
2	3	A	4, 5	2104.501	REMOVE CURB & GUTTER	LIN FT	1 606	388	356	312	42	355	153
3	3	A	4, 5	2104.503	REMOVE CONCRETE WALK	SQ FT	6 114	731	1 282	1 283	153	1 539	1 126
4		A	4, 5	2104.505	REMOVE CONCRETE PAVEMENT	SQ YD	434	134	0	104	0	0	196
5	1	A	4, 5	2104.505	REMOVE BITUMINOUS PAVEMENT	SQ YD	2 659	107	68	852	84	1 382	166
6		A	4, 5	2104.509	REMOVE VALVE BOX	EACH	3	1	2	0	0	0	0
7		A	4, 5	2104.511	SAWING CONCRETE PAVEMENT (FULL DEPTH)	LIN FT	132	0	0	119	0	0	13
8		A	4, 5	2104.511	SAWING BITUMINOUS PAVEMENT (FULL DEPTH)	LIN FT	1 241	135	31	329	47	515	184
9		A	4, 5	2104.523	SALVAGE SIGN	EACH	2	0	1	1	0	0	0
10													
11		B	6	2123.503	MOTOR GRADER	HOUR	20	5	5	5	5	0	0
12		B	6	2131.501	WATER	M GALLON	30	10	10	5	5	0	0
13	7	B	6	2131.501	CALCIUM CHLORIDE SOLUTION	GALLON	3 930	1 635	1 243	416	228	0	408
14													
15	1	B	6	2215.501	FULL DEPTH RECLAMATION	SQ YD	29 055	13 245	9 699	2 017	1 473	0	2 621
16		C	6	2231.501	BITUMINOUS PATCHING MIXTURE	TON	92	0	0	40	5	30	17
17	1, 5	B	6	2232.501	MILL BITUMINOUS SURFACE (2.5")	SQ YD	25 237	13 587	10 578	1 072	0	0	0
18	1	B	6	2232.501	MILL BITUMINOUS SURFACE (3.0")	SQ YD	10 134	0	0	129	1 473	5 911	2 621
19	1	B	6	2232.501	MILL BITUMINOUS SURFACE (5.0")	SQ YD	2 017	0	0	2 017	0	0	0
20													
21	6	C	6	2360.501	TYPE SP 9.5 WEARING COURSE MIXTURE (3,C)	TON	3 601	1 230	960	506	133	532	240
22	6	C	6	2360.501	TYPE SP 12.5 WEARING COURSE MIXTURE (3,C)	TON	3 957	1 590	1 240	0	177	710	240
23	6	C	6	2360.501	TYPE SP 12.5 NON WEARING COURSE MIXTURE (3,C)	TON	883	0	0	883	0	0	0
24													
25		E		2504.602	CONCRETE ENCASED VALVE BOX COLLAR	EACH	29	9	10	3	0	4	3
26		E	8	2504.602	CONCRETE ENCASED CASTING COLLAR	EACH	58	21	19	3	3	6	6
27		E	8	2506.602	CASTING ASSEMBLY	EACH	11	3	7	0	0	0	1
28		E	8	2506.602	ADJUST FRAME AND RING CASTING	EACH	16	5	4	2	2	2	1
29		E	8	2506.602	REPAIR DRAINAGE STRUCTURE	EACH	12	6	4	1	0	1	0
30													
31	3, 4	D	7	2521.501	4" CONCRETE WALK	SQ FT	3 812	415	773	1 294	120	1 006	204
32	3, 4	D	7	2521.501	6" CONCRETE WALK	SQ FT	3 661	518	890	448	93	699	1 013
33													
34	3, 4	D	7	2531.501	CONCRETE CURB & GUTTER DESIGN B624	LIN FT	1 694	387	377	349	42	386	153
35	3, 4	D	7	2531.502	CONCRETE CURB DESIGN V8	LIN FT	96	0	31	0	0	0	65
36	4	D	7	2531.618	TRUNCATED DOMES	SQ FT	428	80	118	72	16	120	22
37	3	D	7	2531.507	7" CONCRETE DRIVEWAY PAVEMENT	SQ YD	89	18	0	0	0	39	32
38		E	8	2540.602	CONSTRUCT SURVEY MARKER	EACH	5	2	2	0	0	0	1
39				2563.61	TRAFFIC CONTROL	LUMP SUM	1	0.167	0.167	0.167	0.167	0.167	0.167
40		F	9	2564.536	INSTALL SIGN PANEL TYPE C	EACH	1	0	1				
41		E	8	2573.53	STORM DRAIN INLET PROTECTION	LUMP SUM	1	0.167	0.167	0.167	0.167	0.167	0.167
42													
43		F	9	2582.503	4" SOLID LINE PAINT	LIN FT	76	0	0	76	0	0	0
44		F	9	2582.503	12" SOLID LINE PAINT	LIN FT	50	0	0	0	29	21	0
45		F	9	2582.503	24" SOLID LINE PAINT	LIN FT	215	0	0	0	88	127	0
46		F	9	2582.503	4" DOUBLE SOLID LINE PAINT	LIN FT	5 980	2 700	1 880	780	0	0	620
47													
48													

I HEREBY CERTIFY THAT THIS PLAN WAS PREPARED BY ME OR UNDER MY DIRECT SUPERVISION AND THAT I AM A DULY LICENSED PROFESSIONAL ENGINEER UNDER THE LAWS OF THE STATE OF MINNESOTA.

SIGNATURE: Patrick Loomis

PATRICK LOOMIS
TYPE NAME

DATE: 04/15/2018

LIC. NO: 49099

CITY OF DULUTH
ENGINEERING DIVISION
411 W. 1ST ST. STE. 211
DULUTH, MN 55802

1690 – STREET PRESERVATION

CITY PROJECT NO.: 1690

STATE AID PROJECT NO.: NA

DRAWN BY: SCA / DJK

STATEMENT OF ESTIMATED QUANTITIES

SHEET NO. 2 OF 36

PLAN LEGEND

RIGHT OF WAY LINE
DITCH CENTERLINE
FENCE LINE
RETAINING WALL
GRAVEL LINE
GUARD RAIL LINE
RAILROAD TRACK LINE
ROAD CENTERLINE
STREAM LINE
WETLAND LINE
EX SANITARY LINE
AB SANITARY LINE
EX FORCEMAIN LINE
AB FORCEMAIN LINE
EX STORM LINE
EX GAS LINE
AB GAS LINE
EX STEAM LINE
UG CABLE TV LINE
UG ELECTRIC LINE
UG FIBEROPTIC LINE
AB FIBEROPTIC LINE
UG TELEPHONE LINE
OH ELECTRIC LINE
OH TELEPHONE LINE
OH CABLE TV LINE

SYMBOLS

EX SANITARY MANHOLE
EX SANITARY CLEANOUT
EX STORM MANHOLE
EX STORM CATCHBASIN
EX. WATER MANHOLE
EX. WATER VALVE
EX. WATER HYDRANT
EX. WATER SHUTOFF
EX. WATER & GAS MH
EX. GAS MANHOLE
EX. GAS VALVE
EX. GAS SHUTOFF
EX. STEAM MANHOLE
EX. TELEPHONE MANHOLE
EX. ELECTRIC MANHOLE
EX. POWERPOLE
EX. LIGHT POLE
EX. ELECTRIC VAULT
EX. ANCHOR
EX. ELECTRIC TRANSFORMER
EX. STREET LIGHT
EX. SIGNAL W/ STREET LIGHT
EX. HANDHOLE
EX. HANDHOLE
EX. TELEPHONE PEDESTAL
EX. SIGN
CONTROL POINT
EX. PARKING METER

ADA LEGEND

LANDING AREA – SHALL NOT EXCEED 2.0% SLOPE IN ALL DIRECTIONS
RAISED DOMES

CONSTRUCTION NOTES:

1) IN PLACE BITUMINOUS PAVEMENT THICKNESS SHOWN IN THIS PLAN ARE APPROXIMATE. VALUES INDICATED IN THE TYPICAL SECTIONS MAY NOT REFLECT ACTUAL FIELD CONDITIONS. DISCREPANCIES FOUND IN THE FIELD SHALL BE DISCUSSED WITH THE ENGINEER PRIOR TO COMMENCEMENT OF MILLING OPERATIONS.

2) COMMON EXCAVATION , AGGREGATE BASE CLASS 5 AND TURF ESTABLISHMENT ARE INCIDENTAL TO THE INSTALLATION OF SIDEWALKS, DRIVEWAY APRONS, AND CURB & GUTTER. ALL SIDEWALKS WILL INCLUDE A 6" AGGREGATE CLASS 5 BASE. TURF RESTORATION INCLUDES: SOIL PREPARATION, 4" MIN. TOPSOIL, SEED MIXTURE 25-131, AND WATER.

3) SAWING IS INCIDENTAL TO SIDEWALK AND CURB & GUTTER REMOVALS.

4) TEMPORARY PEDESTRIAN ACCESS ROUTES MUST BE MAINTAINED AT ALL TIMES WHILE WORKING ON ADA IMPROVEMENTS.

5) MILL BITUMINOUS SURFACE ON BRISTOL ST. FROM STA. 80+ 67.98 TO STA. 83+08.91 WILL BE PAID AT 2.5" DEPTH REGARDLESS OF ACTUAL BITUMIINOUS DEPTHS. THE CONTRACTOR SHALL MILL TO CONCRETE PAVEMENT.

6) CALCULATIONS FOR BITUMINOUS PAVING ARE COMPUTED USING 120-LBS/ SQ/IN.

7) CALCIUM CHLORIDE QUANTITY ARE COMPUTED USING AN APPLICATION RATE OF 0.25 GAL / SY. AREAS COMPUTATION IS 20' WIDE BY STREET LENGTH.

TABULATION CHART INDEX

MnDOT STANDARD PLATES

THE FOLLOWING STANDARD PLATES SHALL APPLY ON THIS PROJECT

PLATE NO.	DESCRIPTION
4000J	MANHOLE OR CATCH BASIN - MASONRY FIELD CONSTRUCTED
7038A	DETECTABLE WARNING SURFACE
7100H	CONCRETE CURB AND GUTTER - DESIGN B AND DESIGN V
7111J	INSTALLATION OF CATCH BASIN CASTINGS
8000J	CHANNELIZERS

CITY OF DULUTH STANDARD DETAILS

DETAIL NO.	DESCRIPTION
EX-1	PVC AND CORRUGATED POLYETHYLENE SEWER PIPE BEDDING
EX-3	CONCRETE STORM SEVER BEDDING
STRM-2	CATCH BASIN/ CURB BOX CASTINGS
STRM-3	CATCH BASIN CASTINGS
STRM-4	FABRIC WRAPPED CATCH BASIN
STRM-5	STORM MANHOLE NON-PAVED AREAS
STRM -5A	CONCRETE ENCASED CASTING COLLAR FOR STORM MH
STRM-6	GUTTER SWALE
STRM-7	GUTTER STAMP
W-19	CONCRETE ENCASED VALVE BOX COLLAR

A	REMOVALS									
		REMOVE VALVE BOX	SALVAGE SIGN	SAWING CONCRETE PAVEMENT (FULL DEPTH)	SAWING BITUMINOUS PAVEMENT (FULL DEPTH)	REMOVE CURB & GUTTER	REMOVE CONCRETE PAVEMENT	REMOVE BITUMINOUS PAVEMENT	REMOVE CONCRETE WALK	
CITY OF DULUTH PROJ. 1690	L / R	2104	2104	2104	2104	2104	2104	2104	2104	
LOCATION		EACH	EACH	LIN FT	LIN FT	LIN FT	SQ FT	SQ FT	SQ FT	REMARKS
ANOKA ST.										
19+74	LT					28			80	
20+00	RT				70					
20+32	LT				10	39	67	24	20	
21+33	RT					16				
22+20	RT					16				
22+77	RT					16				
23+30	RT					16				
25+84	RT					16				
26+43	LT					28			58	
26+91	LT					26			73	
29+99	RT					12				
33+10	LT					31			69	
33+60	LT					18			71	
39+48	LT	1								VERIFY AND ABANDON IF GAS VALVE
39+59	LT					18			100	
39+65	RT				15	56	67	83		SAWCUT AND REMOVE BIT IF NEEDED
40+06	LT					19			91	
45+97	LT					17			90	
46+44	LT					16			79	
49+05	CL				40					EOP
TOTAL - THIS SECTION		1	0	0	135	388	134	107	731	
MAXWELL AVE.										
10+45	LT					9				
13+23	LT					19			68	
13+45	RT		1							
13+50	RT					22			142	
13+72	LT					21			68	
13+91	RT					26			106	
17+67	RT					25				
19+51	LT					20			80	
19+67	RT	1								VERIFY AND ABANDON IF GAS VALVE
20+02	LT					20			94	
21+35	RT	1								VERIFY AND ABANDON IF GAS VALVE
25+89	LT					22			85	
26+38	LT					20			92	
28+18	RT				16	35		35	111	FAIRBAULT
28+54	RT				15	22		33	88	FAIRBAULT
28+57	LT					16			80	
29+37	LT					20			80	
32+33	LT					24			97	
32+36	RT					35			91	
TOTAL - THIS SECTION		2	1	0	31	356	0	68	1 282	

I HEREBY CERTIFY THAT THIS PLAN WAS PREPARED BY ME OR UNDER MY DIRECT SUPERVISION AND THAT I AM A DULY LICENSED PROFESSIONAL ENGINEER UNDER THE LAWS OF THE STATE OF MINNESOTA.

SIGNATURE: Patrick Loomis

PATRICK LOOMIS
TYPE NAME

DATE: 04/15/2018

LIC. NO: 49099

DULUTH MINNESOTA

CITY OF DULUTH
ENGINEERING DIVISION
411 W. 1ST ST. STE. 211
DULUTH, MN 55802

1690 – STREET PRESERVATION

CITY PROJECT NO.: 1690

STATE AID PROJECT NO.: NA

DRAWN BY: SCA / DJK

TABULATION CHART

SHEET NO. 4 OF 36

A

REMOVALS

		REMOVE VALVE BOX	SALVAGE SIGN	SAWING CONCRETE PAVEMENT (FULL DEPTH)	SAWING BITUMINOUS PAVEMENT (FULL DEPTH)	REMOVE CURB & GUTTER	REMOVE CONCRETE PAVEMENT	REMOVE BITUMINOUS PAVEMENT	REMOVE CONCRETE WALK	
CITY OF DULUTH PROJ. 1690	L / R	2104	2104	2104	2104	2104	2104	2104	2104	
LOCATION		EACH	EACH	LIN FT	LIN FT	LIN FT	SQ FT	SQ FT	SQ FT	REMARKS
BRISTOL ST.										
80+68 TO 81+31	23.6' LT			67	36	63		378		BITUMINOUS PAVEMENT (PKG LOT)
80+85 TO 81+21	27.8' LT				36					PARKING LOT
81+59 TO 82+43	29' RT					48			375	BITUMINOUS AND CONCRETE WALKS
81+68 TO 82+43	19'-23' RT			52			104			ALLEY ENTRANCE TO WALK
83+78 TO 84+70	30' LT									
83+75 TO 83+90	LT				20	16		40	100	
84+11 O 84+27	31.5 RT				21	17		42	80	
84+65 TO 84+79	18 LT				20	16		40	97	INPLACE CURB CUT AND RAMP
84+62 TO 84+79	25' RT				41	31		82	139	INPLACE CURB CUT AND RAMP
84+68	34' RT		1							STOP SIGN AT SUPER ONE ENTRANCE
	18' RT				28	25		50		CURB & GUTTER REPLACEMENT
86+55 TO 86+70	30' RT				20	16		40	145	
86+55 TO 86+70	19 LT				20	16		40	62	
87+39.0 TO 88+25.63	30' RT				87	64		140	285	(2) ADA IMPROVEMENTS
TOTAL - THIS SECTION		0	1	119	329	312	104	852	1 283	
CLOVER ST.										
104+24.5 TO 104+49.4	18.5 LT				25	25		50	153	
104+26.5 TO 104+43.6	18.5 RT				22	17		34		
TOTAL - THIS SECTION		0	0	0	47	42	0	84	153	
EIGHTH ST.										
300+27.83 TO 300+50.3	RT				17	13		26	116	
300+30.5 TO 300+44.0	14.1' - 26.9' LT				22	23		40	87	
301+02.5 TO 301+23.0	33'-40.6' RT				18	13		26	140	
301+45.9 TO 301+54.9	RT					22			179	
306+70.3 TO 306+87.8	LT				38	17		34	75	
306+70.7 TO 307+06.8	RT				57	47		114	176	
307+28.5 TO 307+58.1	RT				21	15		34	116	
308+10.0 TO 308+47.1	RT				59	37		305	50	RESIDENTIAL DRIVEWAY
311+47.7 TO 312+24.5	LT				126	45		540	150	27TH AVE E. & DRIVEWAY
311+47.5 TO 311+75.8	RT				40	31		66	90	
311+90.8 TO 312+16.8	RT				44	35		75	131	
316+11.0 TO 316+40.9	LT				34	26		56	112	28TH AVE E.
316+59.4 TO 316+87.3	LT				39	31		66	117	28TH AVE E.
TOTAL - THIS SECTION		0	0	0	515	355	0	1 382	1 539	
HIGHLAND ST. - CENTRAL AVE.										
802+50	LT			13	31	27	196	28	165	
803+10	LT				33	25		29	140	
803+75	LT				43	36		39	280	
806+45	LT				41	35		38	245	
806+45	RT				36	30		32	296	
TOTAL - THIS SECTION		0	0	13	184	153	196	166	1 126	
TOTALS		3	2	132	1241	1606	434	2659	6114	

I HEREBY CERTIFY THAT THIS PLAN WAS PREPARED BY ME OR UNDER MY DIRECT SUPERVISION AND THAT I AM A DULY LICENSED PROFESSIONAL ENGINEER UNDER THE LAWS OF THE STATE OF MINNESOTA.

SIGNATURE: Patrick Loomis

PATRICK LOOMIS
TYPE NAME

DATE: 04/15/2018

LIC. NO: 49099

CITY OF DULUTH
ENGINEERING DIVISION
411 W. 1ST ST. STE. 211
DULUTH, MN 55802

1690 – STREET PRESERVATION

CITY PROJECT NO.: 1690

STATE AID PROJECT NO.: NA

DRAWN BY: SCA / DJK

TABULATION CHART

SHEET NO. 5 OF 36

B — MILLING OPERATIONS

CITY OF DULUTH PROJ. 1690	LT / RT	MOTOR GRADER	WATER	CALCIUM CHLORIDE SOLUTION	FULL DEPTH RECLAMATION	MILL BITUMINOUS SURFACE (2.5")	MILL BITUMINOUS SURFACE (3"0)	MILL BITUMINOUS SURFACE (5.0")	REMARKSS
		2123	2130	2131	2215	2232	2232	2232	
		HOUR	MGAL	GALLON	SQ YD	SQ YD	SQ YD	SQ YD	
W. ANOKA ST.									
19+61.23 (BOP) TO 49+04.87 (EOP)	LT / RT	5	10	1 635	13 245	13 587			RECLAIM - 2.5" BIT,2.5" CL 5
TOTAL - THIS SECTION		5	10	1 635	13 245	13 587	0	0	
MAXWELL AVE.									
10+39.40 (BOP) TO 32+76.38 (EOP)		5	10	1 243	9 699	10 578			RECLAIM - 2.5" BIT,2.5" CL 5
TOTAL - THIS SECTION		5	10	1 243	9 699	10 578	0	0	
BRISTOL ST.									
80+68 TO 83+08.9	LT / RT					1 072			CONC AREA…(9651)
83+08.9 TO 88+17.00	LT / RT	5	5	416	2 017			2 017	7" BITUMINOUS SECTION (26 499 sf)
84+15 TO 84+77	RT						70		628 SF SUPER ONE ENTRANCE
87+39.0 TO 88+25.63							59		EAST ENTRANCE TO SUPER ONE
TOTAL - THIS SECTION		5	5	416	2 017	1 072	129	2 017	
CLOVER ST.									
100+65.0 TO 104+75.26	LT / RT	5	5	228	1 473		1 473		12534 (1473 SY)
TOTAL - THIS SECTION		5	5	228	1 473	0	1 473	0	
EIGHTH ST.									
300+27.8 TO 321+76.68	LT / RT						5 911		(53195.97 SF) - 5911 SY
TOTAL - THIS SECTION		0	0	0	0	0	5 911	0	
HIGHLAND ST. - CENTRAL AVE.									
800+68.17 TO 806+60.5	LT / RT	0	0	408	2 107		2 107		
900+57.6 TO 902+15.0	LT / RT				514		514		
TOTAL - THIS SECTION		0	0	408	2 621	0	2 621	0	
TOTALS		20	30	3930	29055	25237	10134	2017	

C — BITUMINOUS PAVEMENT

CITY OF DULUTH PROJ. 1690		BITUMINOUS PATCHING MIXTURE	TYPE SP 9.5 WEARING COURSE MIXTURE (3, C)	TYPE SP 12.5 WEARING COURSE MIXTURE (3, C)	TYPE SP 12.5 NON WEARING COURSE MIXTURE (3, C)	REMARKS
	LT/RT	2231	2360	2360	2360	
		TON	TON	TON	TON	
W. ANOKA ST						
LOCATION						
19+61.23 (BOP) TO 49+04.87 (EOP)	LT/RT	0	1 230	1 590	0	
TOTAL - THIS SECTION		0	1 230	1 590	0	
MAXWELL AVE.						
10+39.40 (BOP) TO 32+76.38 (EOP)	LT/RT	0	960	1 240	0	
TOTAL - THIS SECTION		0	960	1 240	0	
BRISTOL ST.						
	LT/RT					REMARK
80+68 TO 83+08.9		5	129			2" (9.5")WEAR OVER CONC
83+08.9 TO 88+17.00		25	353	0	883	5" (12.5) WEAR 2" (9.5) WEAR
84+15 TO 84+77		5	13			3" (9.5") WEAR (SUPER ONE ENTRANCE) W
87+39.0 TO 88+25.63		5	11			3" (9.5") WEAR (SUPER ONE ENTRANCE) E
TOTAL - THIS SECTION		40	506	0	883	
CLOVER ST.						
	LT/RT					REMARK
100+65.00 TO 105+63.0		5	133	177	0	1.5" 9.5, 2.0" 12.5
						12534 (1473 SY)
TOTAL - THIS SECTION		5	133	177	0	
E. EIGHTH ST.						
						REMARK
300+27.8 TO 319+51.54	LT / RT	30	532	710	0	1.5" 9.5 2" 12.5 (5911 SY)
TOTAL - THIS SECTION		30	532	710	0	
HIGHLAND ST. - CENTRAL AVE.						
800+68.17 TO 806+60.5	LT/RT	17	194	194	0	1.5" (9.5 WEAR) 1.5" (12.5 WEAR)
900+57.6 TO 902+15.0	LT/RT		46	46		1.5" (9.5 WEAR) 1.5" (12.5 WEAR)
TOTAL - THIS SECTION		17	240	240	0	
TOTALS		92	3601	3957	883	

NOTES:

BITUMINOUS PATCHING QUANTITY IS CALCULATED USING THE FOLLOWING:(REMOVAL AREA X THE PROPOSED PAVEMENT DEPTH.)

I HEREBY CERTIFY THAT THIS PLAN WAS PREPARED BY ME OR UNDER MY DIRECT SUPERVISION AND THAT I AM A DULY LICENSED PROFESSIONAL ENGINEER UNDER THE LAWS OF THE STATE OF MINNESOTA.

SIGNATURE: Patrick Loomis — PATRICK LOOMIS (TYPE NAME)

DATE: 04/15/2018

LIC. NO: 49099

CITY OF DULUTH
ENGINEERING DIVISION
411 W. 1ST ST. STE. 211
DULUTH, MN 55802

1690 – STREET PRESERVATION

CITY PROJECT NO.: 1690 | STATE AID PROJECT NO.: NA

DRAWN BY: SCA / DJK

TABULATION CHART

SHEET NO. 6 OF 36

D	PROPOSED CONCRETE							
		4" CONCRETE WALK	6" CONCRETE WALK	CONCRETE CURB & GUTTER DESIGN B624	CONCRETE CURB DESIGN V8	TRUNCATED DOMES	7" CONCRETE DRIVEWAY PAVEMENT	
CITY OF DULUTH PROJ. 1690	LT / R T	2521	2521	2531	2 531	2531	2531	
LOCATION		SQ FT	SQ FT	LIN FT	LIN FT	SQ FT	SQ YD	REMARKS
W. ANOKA ST.								
19+74	LT	40	40	28		8		
20+32	LT	20	85	39		8	10	
21+33	RT			16				
22+20	RT			16				
22+77	RT			16				
23+30	RT			16				
25+84	RT			16				
26+43	LT	23	55	28		8		
26+91	LT	40	50	25		8		
30+02	RT			12				
33+10	LT	32	48	31		8		
33+60	LT	34	55	18		8		
39+59	LT	54	48	18		8		
39+65	RT			56			8	
40+06	LT	61	52	19		8		
45+97	LT	53	44	17		8		
46+44	LT	58	41	16		8		
TOTAL - THIS SECTION		415	518	387	0	80	18	
MAXWELL AVE.								
10+45	LT			9				
13+23	LT	40	55	19		9		RADIAL DOMES
13+50	RT	72	112	22		9		RADIAL DOMES
13+72	LT		116	21		9		RADIAL DOMES
13+91	RT	60	70	26		9		RADIAL DOMES
17+67	RT			25				
19+51	LT	28	60	20		8		
20+02	LT	45	72	20		8		
25+89	LT	34	80	22		8		
26+38	LT	51	70	20		8		
28+05	LT	80	50	16		8		
28+05 TO 28+20	RT	185	40	51		17		(2) LANDINGS
28+54	RT		100	38	31	8		
29+37	LT	80		20				
32+33	LT	50	25	20		9		
32+36	RT	48	40	28		8		
TOTAL - THIS SECTION		773	890	377	31	118	0	

D	PROPOSED CONCRETE							
		4" CONCRETE WALK	6" CONCRETE WALK	CONCRETE CURB & GUTTER DESIGN B624	CONCRETE CURB DESIGN V8	TRUNCATED DOMES	7" CONCRETE DRIVEWAY PAVEMENT	
CITY OF DULUTH PROJ. 1690	LT / R T	2521	2521	2531	2 531	2531	2531	
LOCATION		SQ FT	SQ FT	LIN FT	LIN FT	SQ FT	SQ YD	REMARKS
BRISTOL ST.								
80+68 TP 81+31	19' LT			63				
81+59 TO 82+07	19' RT			48				
81+65 TO 82+43	RT	371						CX AND CL-5, INCIDENTAL TO WALK
83+09 TO 83+34	19' LT			25				
83+79 TO 84+75	LT	488						CL-5, INCIDENTAL TO WALK
83+75 TO 83+90	19 LT			16				
84+11 TO 82+27	30'RT	25	60	13		8		84+65 TO 84+81
84+63 TO 84+80	20'- 43' RT	96	99	31		24		RADIAL DOMES
84+65 TO 84+81	20 LT	25	71	16		8		CX AND CL 5, INCIDENTAL TO WALK
85+11.0 TO 85+36.0	19 LT			25				
86+55 TO 86+71	20 LT	25	51	16		8		
86+54 TO 86+71	20 RT	75	71	16		8		
87+08 TO 87+23	20 LT			16				
87+39.0 TO 88+25.63	30 RT	189	96	64		16		(2) ADA IMPROVEMENTS
TOTAL - THIS SECTION		1 294	448	349	0	72	0	
CLOVER ST.								
104+24.4 TO 104+49.4	LT	120	30	25		8		ADA IMPROVEMNTS
104+26.3 TO 104.45.6	RT		63	17		8		ADA IMPROVEMNTS
TOTAL - THIS SECTION		120	93	42	0	16	0	
EIGHTH ST.								
LOCATION	LT / RT							
300+25.3 TO 300+50.3	RT	98	25	13		8		ADA IMPROVEMENTS
300+43.6 TO 300+50.9	14' - 34' LT	100	22	23		8		ADA IMPROVEMENTS
301+02.5 TO 301+23.0	33' - 41' RT	25	83	13		8		ADA IMPROVEMENTS
301+45.9 TO 301+66.9	33.7'- 18.5' RT		92	22		16		ADA IMPROVEMENTS
306+70.3 TO 306+87.8	LT	75	42	17		8		ADA IMPROVEMENTS
306+70.7 TO 307+06.8	RT	145	68	47		16		(2) ADA IMPROVEMENTS
307+28.5 TO 307+58.1	RT	80	29	15		8		ADA IMPROVEMENTS
308+10.0 TO 308+47.1	RT		144	37			17	RESIDENTIAL ENTRANCE
311+47.7 TO 312+24.5	LT	258	36	77		8	22	
311+47.5 TO 311+75.8	RT	40	44	31		16		SW CORNER
311+90.8 TO 312+16.8	RT	101	52	35		8		NE
316+11.0 TO 316+40.9	LT	42	25	26		8		28TH AVE E
316+59.4 TO 316+87.3	LT	42	37	30		8		28TH AVE E
TOTAL - THIS SECTION		1 006	699	386	0	120	39	
HIGHLAND ST. - CENTRAL AVE.								
802+50	LT		165	27		22		
803+10	LT	33	104	25	20		8	
803+75	LT	75	198	36	15		8	
806+45	LT	96	156	35	30		8	
806+45	RT		390	30			8	
TOTAL - THIS SECTION		204	1 013	153	65	22	32	
TOTALS		3812	3661	1694	96	428	89	

I HEREBY CERTIFY THAT THIS PLAN WAS PREPARED BY ME OR UNDER MY DIRECT SUPERVISION AND THAT I AM A DULY LICENSED PROFESSIONAL ENGINEER UNDER THE LAWS OF THE STATE OF MINNESOTA.

SIGNATURE: Patrick Loomis

PATRICK LOOMIS
TYPE NAME

DATE: 04/15/2018

LIC. NO: 49099

CITY OF DULUTH
ENGINEERING DIVISION
411 W. 1ST ST. STE. 211
DULUTH, MN 55802

1690 – STREET PRESERVATION

CITY PROJECT NO.: 1690

STATE AID PROJECT NO.: NA

DRAWN BY: SCA / DJK

TABULATION CHART

SHEET NO. 7 OF 36

E — ENCASEMENT AND REPAIR

CITY OF DULUTH PROJ. 1690	SHEET	CONCRETE ENCASED VALVE BOX COLLAR	CONCRETE ENCASED CASTING COLLAR	CASTING ASSEMBLY	ADJUST FRAME AND RING CASTING	REPAIR DRAINAGE STRUCTURE	CONSTRUCT SURVEY MONUMENT	STORM DRAIN INLET PROTECTION	REMARKS
		2504	2506	2506	2506	2506	2540	2540	
		EACH	EACH	EACH	EACH	LIN FT	EACH	LUMP SUM	
W. ANOKA ST.									
19+61.23(BOP) TO 27+00	20	5	4	2	2		1	7	2- SANITARY CASTINGS
27+01 TO 33+75	20	2	7	1	2		1	2	1- STORM CASTING
33+76 TO 40+25	21	1	6		1			4	
40+26 TO 46+75	21	1	4					2	
46+76 TO 49+04.87(EOP)	22								
VARIOUS LOCATIONS						6			PER ENGINEER
TOTAL - THIS SECTION		9	21	3	5	6	2	15	
MAXWELL AVE.									
10+39.40(BOP) TO 17+00	23	3	2	1	1			4	1- SANITARY CASTING
17+01 TO 25+00	23	4	10	4	1		1	6	4-STORM CASTINGS
25+01 TO 32+76.38(EOP)	24	3	7	2	2		1	5	1- SANITARY, 1-STORM CASTING
VARIOUS LOCATIONS						4			PER ENGINEER
TOTAL - THIS SECTION		10	19	7	4	4	2	15	
BRISTOL ST.									
LOCATON									
80+67.95 TO 88+17.00	25	3						4	WATER VALVES
80+67.95 TO 88+17.00			3						SANITARY MH
80+67.95 TO 88+17.00					2	1			CATCTH BASINS
TOTAL - THIS SECTION		3	3	0	2	1	0	4	
CLOVER ST.									
100+65.00 TO 104+75.26			3						STORM MH CASTINGS
100+65.00 TO 104+75.26	27				2			2	CATCH BASINS
TOTAL - THIS SECTION		0	3	0	2	0	0	2	
EIGHTH ST.									
300+68.75 TO 321+76.68	27-29	4	6		2	1		7	
TOTAL - THIS SECTION		4	6	0	2	1	0	7	
HIGHLAND ST. - CENTRAL AVE.									
800+68.17 TO 806+60.5	30	2	4	1	1			8	
900+57.6 TO 902+15.0		1	2				1		PER ENGINEER
TOTAL - THIS SECTION		3	6	1	1	0	1		
TOTALS		29	58	11	16	12	5	43	

I HEREBY CERTIFY THAT THIS PLAN WAS PREPARED BY ME OR UNDER MY DIRECT SUPERVISION AND THAT I AM A DULY LICENSED PROFESSIONAL ENGINEER UNDER THE LAWS OF THE STATE OF MINNESOTA.

SIGNATURE: Patrick Loomis

PATRICK LOOMIS
TYPE NAME

DATE: 04/15/2018

LIC. NO: 49099

CITY OF DULUTH
ENGINEERING DIVISION
411 W. 1ST ST. STE. 211
DULUTH, MN 55802

1690 – STREET PRESERVATION

CITY PROJECT NO.: 1690

STATE AID PROJECT NO.: NA

DRAWN BY: SCA / DJK

TABULATION CHART

SHEET NO. 8 OF 36

F

PAVEMENT MARKINGS AND SIGNS

		INSTALL SIGN PANEL TYPE C	4" SOLID LINE PAINT (WHITE)	12" SOLID LINE PAINT (WHITE)	24" SOLID LINE PAINT (WHITE)	4" DOUBLE SOLID PAINT (YELLOW)	REMARKS
CITY OF DULUTH PROJ. 1690	L / R	2564	2582	2582	2582	2582	
LOCATION		EA	LIN FT	LIN FT	LIN FT	LIN FT	
W. ANOKA ST.							
19+61.23 (BOP) TO 49+04.87 (EOP)	CL		0	0	0	2 700	
TOTAL - THIS SECTION		0	0	0	0	2 700	
MAXWELL ST.							
10+39.40 (BOP) TO 32+76.38 (EOP)	CL						
13+43	RT	1				1 880	PREVIOUSLY SALVAGESD STREET SIGN
TOTAL - THIS SECTION		1	0	0	0	1 880	
BRISTOL ST.							
	LT/RT						
80+67.95 TO 88+25.6	CL					780	
80+44.0 TO 81+20.0			76				
TOTAL - THIS SECTION		0	76	0	0	780	
CLOVER ST.							
	LT/RT						
104+27.9	C/L TO 17' RT			17			STOP BAR
104+36.8	16' LT / RT				32		PED X-ING (6' WIDTH)
105+53.0	LT/RT				56		PED X-ING (6' WIDTH)
105+69				12			STOP BAR
TOTAL - THIS SECTION		0	0	29	88	0	
EIGHTH ST.							
	LT/RT						
300+29.0	C/L TO 10' RT			10			STOP BAR
300+37.0	LT / RT				50		PED X-ING (6' WIDTH)
301+32.0	LT / RT				77		PED X-ING (6' WIDTH)
301+43	C/L TO 11' RT			11			STOP BAR
TOTAL - THIS SECTION		0	0	21	127	0	
HIGHLAND ST. - CENTRAL AVE.							
	CL						
800+68.17 TO 806+60.5						515	
900+57.6 TO 902+15.0						105	
TOTAL - THIS SECTION		0	0	0	0	620	
TOTALS		1	76	50	215	5980	

I HEREBY CERTIFY THAT THIS PLAN WAS PREPARED BY ME OR UNDER MY DIRECT SUPERVISION AND THAT I AM A DULY LICENSED PROFESSIONAL ENGINEER UNDER THE LAWS OF THE STATE OF MINNESOTA.

SIGNATURE: Patrick Loomis

PATRICK LOOMIS
TYPE NAME

DATE: 04/15/2018

LIC. NO: 49099

THE CITY OF DULUTH MINNESOTA

CITY OF DULUTH
ENGINEERING DIVISION
411 W. 1ST ST. STE. 211
DULUTH, MN 55802

1690 – STREET PRESERVATION

CITY PROJECT NO.: 1690

STATE AID PROJECT NO.: NA

DRAWN BY: SCA / DJK

TABULATION CHART

SHEET NO. 9 OF 36

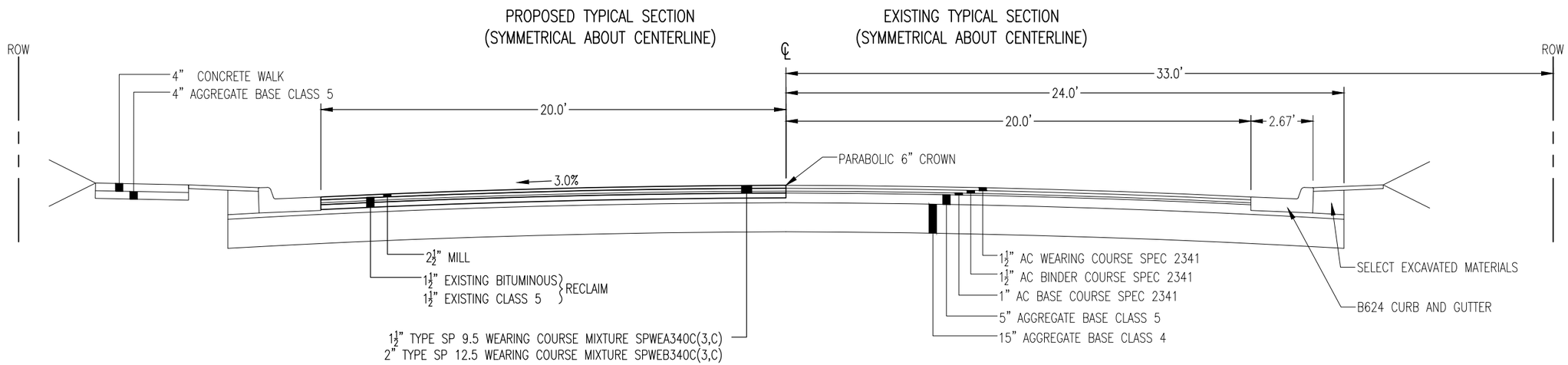

PROPOSED/EXISTING TYPICAL SECTION

W. ANOKA ST.
STA 19+61.23 TO STA 49+04.87

I HEREBY CERTIFY THAT THIS PLAN WAS PREPARED BY ME OR UNDER MY DIRECT SUPERVISION AND THAT I AM A DULY LICENSED PROFESSIONAL ENGINEER UNDER THE LAWS OF THE STATE OF MINNESOTA.

SIGNATURE: Patrick Loomis

PATRICK LOOMIS
TYPE NAME

DATE: 04/15/2018

LIC. NO: 49099

THE CITY OF DULUTH MINNESOTA

CITY OF DULUTH
ENGINEERING DIVISION
411 W. 1ST ST. STE. 211
DULUTH, MN 55802

1690 – STREET PRESERVATION

CITY PROJECT NO.: 1690

STATE AID PROJECT NO.: NA

DRAWN BY: SCA / DJK

TYPICAL SECTION – ANOKA ST.

SHEET NO. 10 OF 35

PROPOSED TYPICAL SECTION
(SYMMETRICAL ABOUT CENTERLINE)

EXISTING TYPICAL SECTION
(SYMMETRICAL ABOUT CENTERLINE)

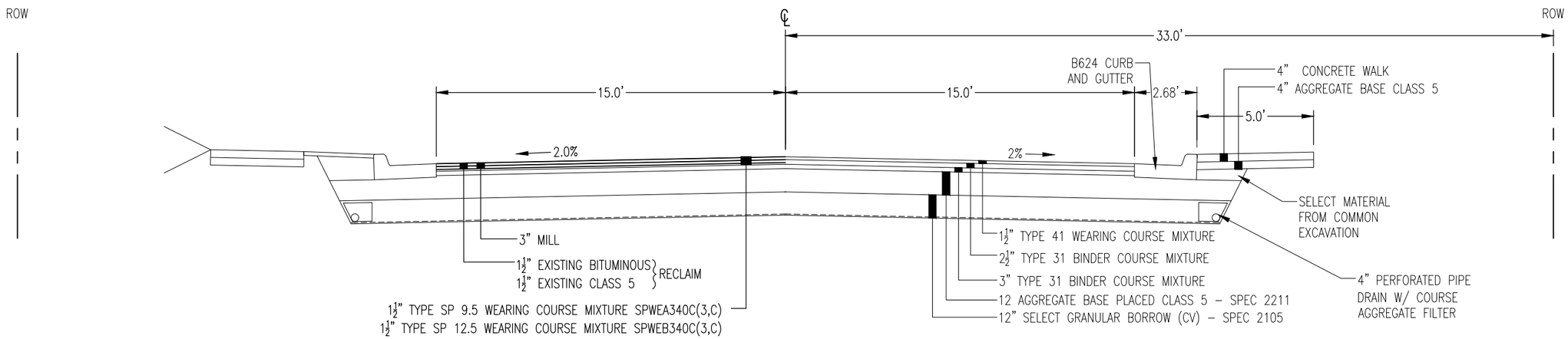

PROPOSED/EXISTING TYPICAL SECTION

HIGHLAND ST.
800+68.17 TO 806+60.5
CENTRAL AVE.
900+57.6 TO 902+16.0

I HEREBY CERTIFY THAT THIS PLAN WAS PREPARED BY ME OR UNDER MY DIRECT SUPERVISION AND THAT I AM A DULY LICENSED PROFESSIONAL ENGINEER UNDER THE LAWS OF THE STATE OF MINNESOTA.

SIGNATURE: Patrick Loomis — PATRICK LOOMIS (TYPE NAME)

DATE: 04/15/2018
LIC. NO: 49099

CITY OF DULUTH
ENGINEERING DIVISION
411 W. 1ST ST. STE. 211
DULUTH, MN 55802

1690 – STREET PRESERVATION

CITY PROJECT NO.: 1690 | STATE AID PROJECT NO.: NA

DRAWN BY: SCA / DJK
TYPICAL SECTION – HIGHLAND ST.
SHEET NO. 11 OF 35

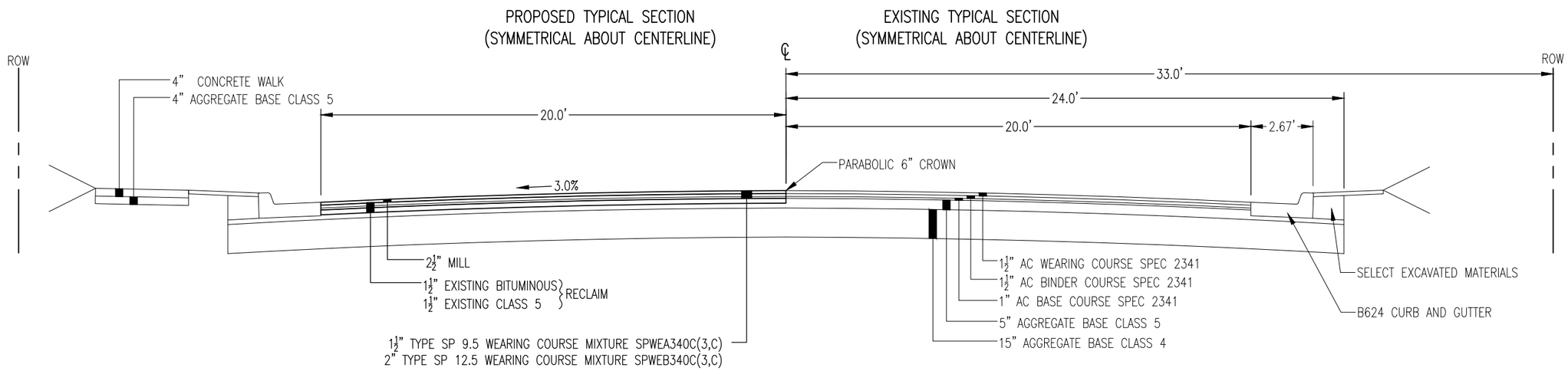

PROPOSED/EXISTING TYPICAL SECTION

MAXWELL AVE.
STA 10+39.40 TO STA 32+76.38

I HEREBY CERTIFY THAT THIS PLAN WAS PREPARED BY ME OR UNDER MY DIRECT SUPERVISION AND THAT I AM A DULY LICENSED PROFESSIONAL ENGINEER UNDER THE LAWS OF THE STATE OF MINNESOTA.

SIGNATURE: Patrick Loomis

PATRICK LOOMIS
TYPE NAME

DATE: 04/15/2018

LIC. NO: 49099

THE CITY OF DULUTH

CITY OF DULUTH
ENGINEERING DIVISION
411 W. 1ST ST. STE. 211
DULUTH, MN 55802

1690 – STREET PRESERVATION

CITY PROJECT NO.: 1690

STATE AID PROJECT NO.: NA

DRAWN BY: SCA / DJK

TYPICAL SECTION – MAXWELL AVE.

SHEET NO. 12 OF 35

BRISTOL STREET
INPLACE TYPICAL SECTION
APPLIES:
STA. 80+67.98 TO 81+58.87

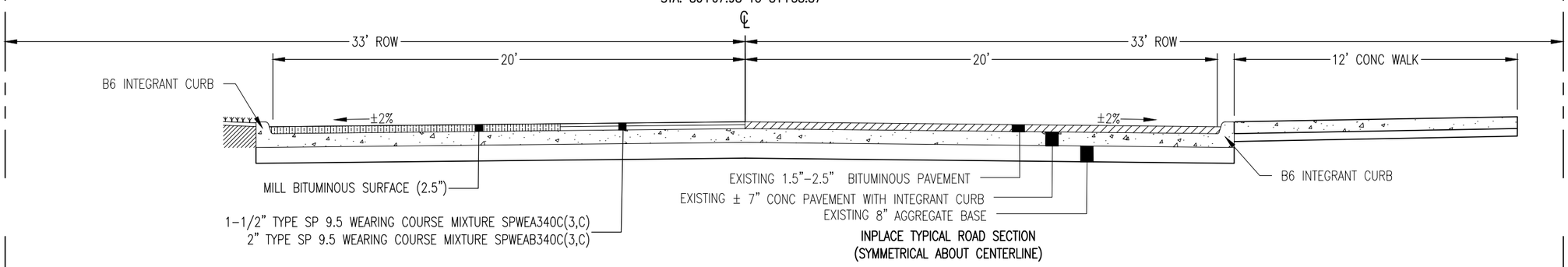

INPLACE TYPICAL ROAD SECTION
(SYMMETRICAL ABOUT CENTERLINE)

TYPICAL IS REFERENCED FROM FROM CITY JOB 2335 (1927)

BRISTOL STREET
INPLACE TYPICAL SECTION
APPLIES:
STA. 81+58.87 TO 83+08.91

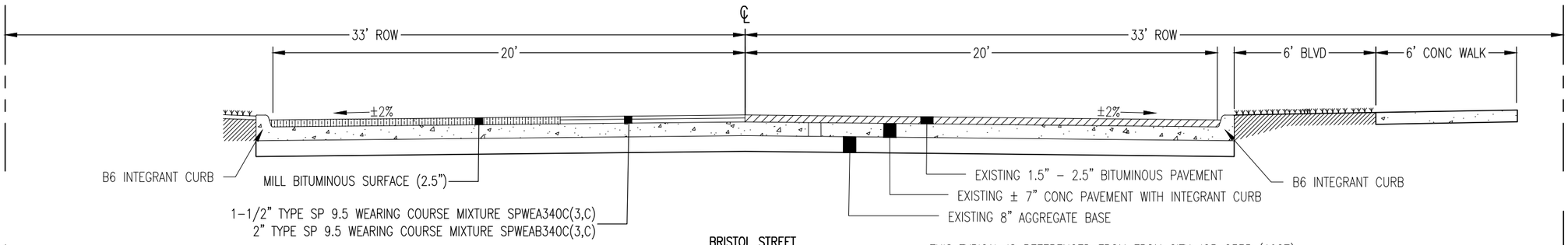

THIS TYPICAL IS REFERENCED FROM FROM CITY JOB 2335 (1927)

BRISTOL STREET
INPLACE TYPICAL SECTION
APPLIES:
STA. 83+08.91 TO 88+17.00

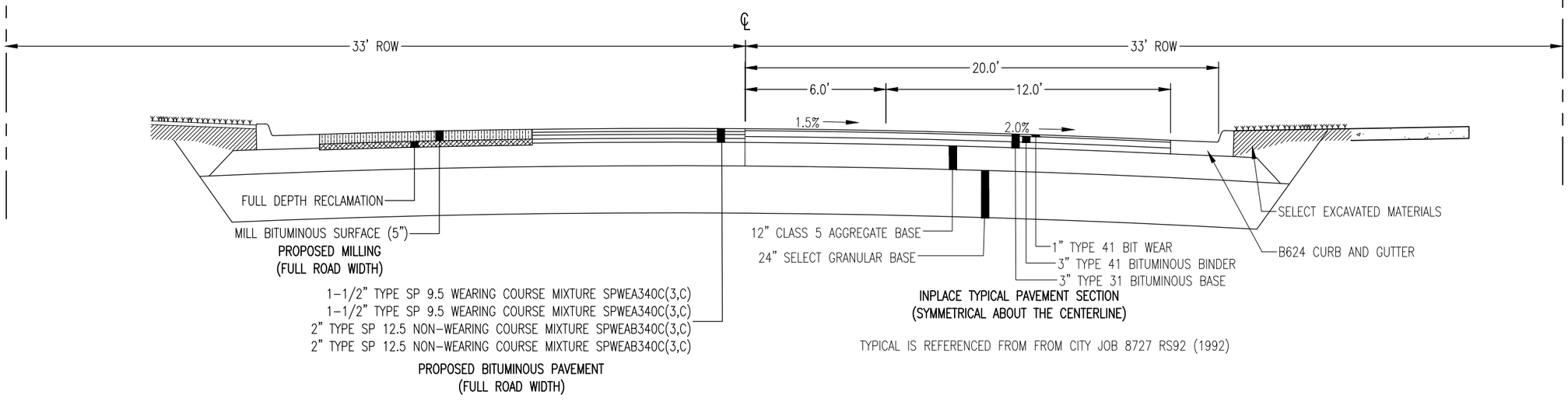

INPLACE TYPICAL PAVEMENT SECTION
(SYMMETRICAL ABOUT THE CENTERLINE)

TYPICAL IS REFERENCED FROM FROM CITY JOB 8727 RS92 (1992)

I HEREBY CERTIFY THAT THIS PLAN WAS PREPARED BY ME OR UNDER MY DIRECT SUPERVISION AND THAT I AM A DULY LICENSED PROFESSIONAL ENGINEER UNDER THE LAWS OF THE STATE OF MINNESOTA.

SIGNATURE: Patrick Loomis

PATRICK LOOMIS
TYPE NAME

DATE: 04/15/2018

LIC. NO: 49099

CITY OF DULUTH
ENGINEERING DIVISION
411 W. 1ST ST. STE. 211
DULUTH, MN 55802

1690 – STREET PRESERVATION

CITY PROJECT NO.: 1690

STATE AID PROJECT NO.: NA

DRAWN BY: SCA / DJK

TYPICAL SECTION – BRISTOL ST.

SHEET NO. 13 OF 35

i:\pwu\engineer\projects\1500-1999\1690_2018_street_preservation\drawings\bristol\1690_ts.dwg 5/3/2018 9:34 AM

CLOVER STREET
INPLACE TYPICAL SECTION
APPLIES:
STA. 100+69.00 TO 104+53.15

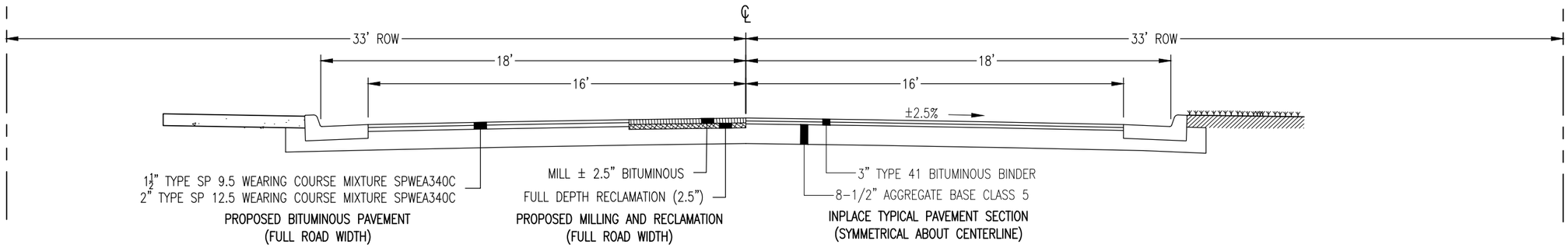

TYPICAL IS REFERENCED FROM FROM CITY JOB 6861 (1970)

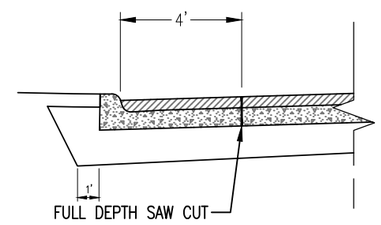

TYPICAL CURB REMOVAL DETAIL – E. EIGHTH ST.
NO SCALE

E. 8TH STREET
TYPICAL SECTION
INPLACE & PROPOSED
APPLIES:
STA. 300+27.83 TO 319+51.54

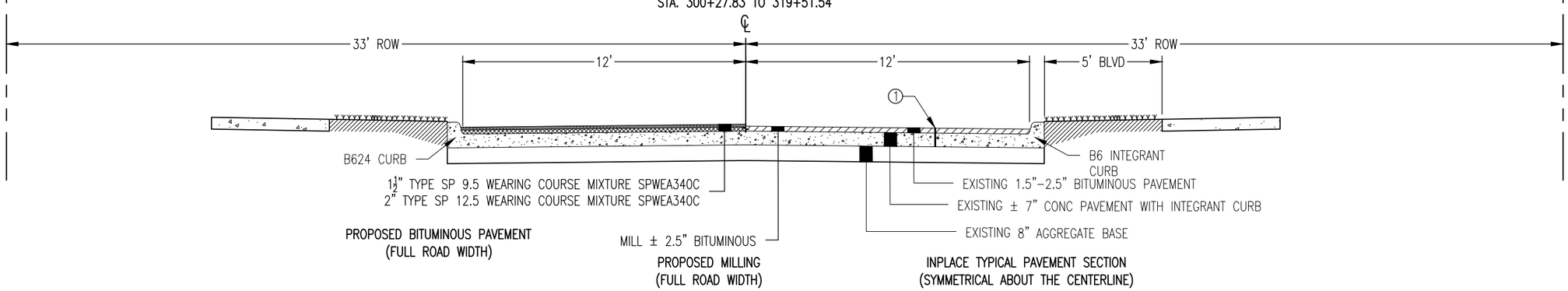

INPLACE SECTION IS REFERENCED FROM FROM CITY JOB 2948 (1929)

I HEREBY CERTIFY THAT THIS PLAN WAS PREPARED BY ME OR UNDER MY DIRECT SUPERVISION AND THAT I AM A DULY LICENSED PROFESSIONAL ENGINEER UNDER THE LAWS OF THE STATE OF MINNESOTA.

SIGNATURE: Patrick Loomis

PATRICK LOOMIS
TYPE NAME

DATE: 04/15/2018

LIC. NO: 49099

DULUTH MINNESOTA

CITY OF DULUTH
ENGINEERING DIVISION
411 W. 1ST ST. STE. 211
DULUTH, MN 55802

1690 – STREET PRESERVATION

CITY PROJECT NO.: 1690

STATE AID PROJECT NO.: NA

DRAWN BY: SCA / DJK

TYPICAL SECTION – CLOVER ST.

SHEET NO. 14 OF 35

i:\pwu\engineer\projects\1500-1999\1690_2018_street_preservation\drawings\clover_ e. eighth\1690_ts_c8.dwg 5/2/2018 2:13 PM

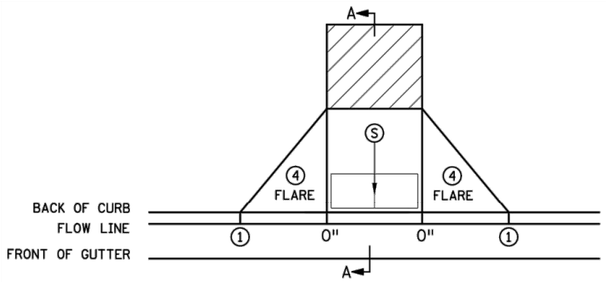

PERPENDICULAR

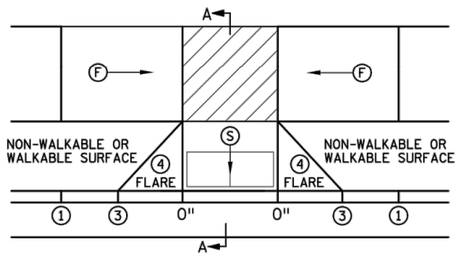

TIERED PERPENDICULAR

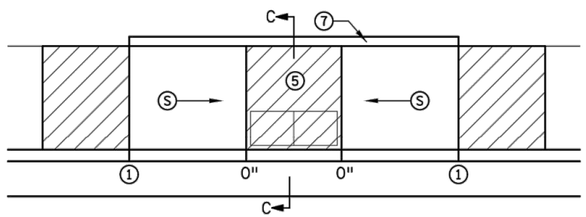

PARALLEL

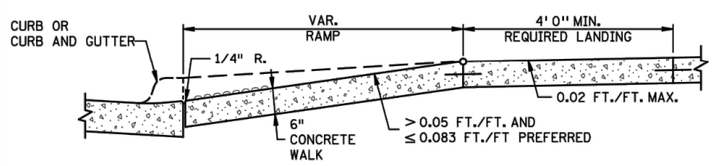

SECTION A-A

PERPENDICULAR/TIERED/DIAGONAL

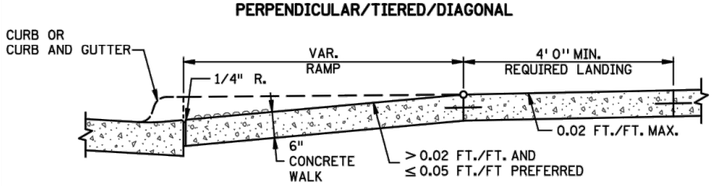

SECTION B-B

FAN

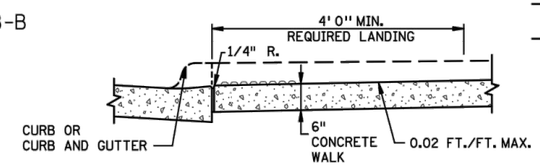

SECTION C-C

PARALLEL/DEPRESSED CORNER

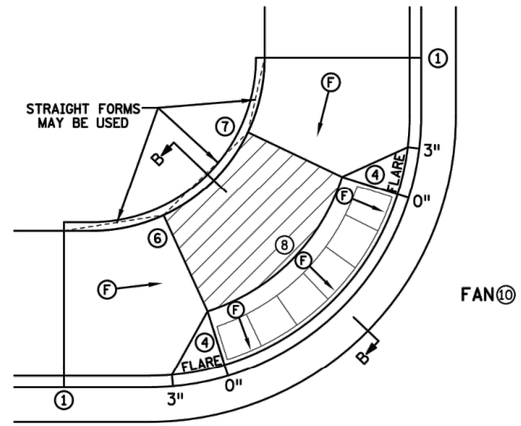

FAN 10

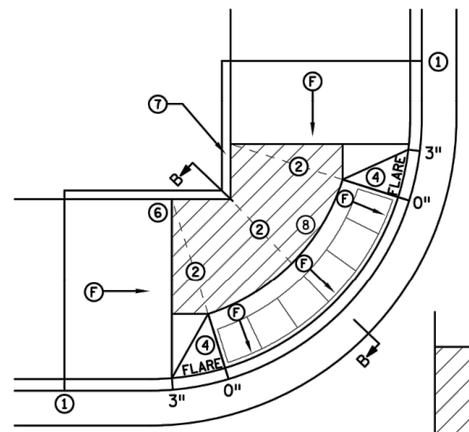

MODIFIED FAN 10

USED WHEN RIGHT-OF-WAY IS CONSTRAINED

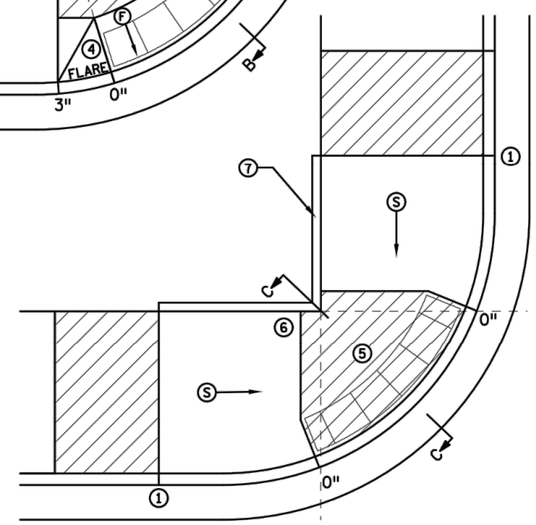

DEPRESSED CORNER

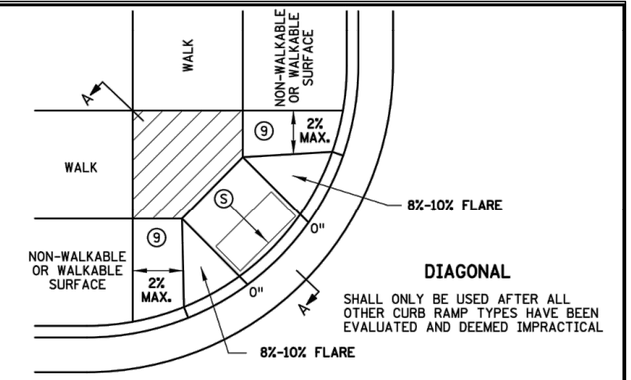

DIAGONAL

SHALL ONLY BE USED AFTER ALL OTHER CURB RAMP TYPES HAVE BEEN EVALUATED AND DEEMED IMPRACTICAL

NOTES:

LANDINGS SHALL BE LOCATED ANYWHERE THE PEDESTRIAN ACCESS ROUTE (PAR) CHANGES DIRECTION, AT THE TOP OF RAMPS THAT HAVE RUNNING SLOPES GREATER THAN 5.0%, AND IF THE APPROACHING WALK IS INVERSE GRADE GREATER THAN 2%.

INITIAL CURB RAMP LANDINGS SHALL BE CONSTRUCTED WITHIN 15' FROM THE BACK OF CURB, WITH 6' FROM THE BACK OF CURB BEING THE PREFERRED DISTANCE, ONLY APPLICABLE WHEN THE INITIAL RAMP RUNNING SLOPE IS OVER 5.0%.

SECONDARY CURB RAMP LANDINGS ARE REQUIRED FOR EVERY 30" OF VERTICAL RISE WHEN THE LONGITUDINAL RUNNING SLOPE IS GREATER THAN 5.0%.

CONTRACTION JOINTS SHALL BE CONSTRUCTED ALONG ALL GRADE BREAKS WITHIN THE PAR. 1/4" DEEP VISUAL JOINTS SHALL BE USED AT THE TOPS OF CONCRETE FLARES ADJACENT TO WALKABLE SURFACES.

ALL GRADE BREAKS WITHIN THE PAR SHALL BE PERPENDICULAR TO THE PATH OF TRAVEL, THUS BOTH SIDES OF A SLOPED WALKING SURFACE MUST BE EQUAL LENGTH. (EXCEPT AS STATED IN 6 BELOW.

TO ENSURE INITIAL RAMPS AND INITIAL LANDINGS ARE PROPERLY CONSTRUCTED, LANDINGS SHALL BE CAST SEPARATELY. FOLLOW SIDEWALK REINFORCEMENT DETAILS ON SHEET 6 AND THE ADA SPECIAL PROVISIONS - PROSECUTION OF WORK (ADA).

TOP OF CURB SHALL MATCH PROPOSED ADJACENT WALK GRADE.

WHEN THE BOULEVARD IS 4' WIDE OR LESS, THE TOP OF CURB TAPER SHALL MATCH THE RAMP SLOPES TO REDUCE NEGATIVE BOULEVARD SLOPES FROM THE TOP BACK OF CURB TO THE PAR.

ALL RAMP TYPES SHOULD HAVE A MINIMUM 3' LONG RAMP LENGTH.

4' MINIMUM WIDTH OF DETECTABLE WARNING IS REQUIRED FOR ALL RAMPS. DETECTABLE WARNINGS SHALL CONTINUOUSLY EXTEND FOR A MIN. OF 24" IN THE PATH OF TRAVEL. DETECTABLE WARNING TO COVER ENTIRE WIDTH OF SHARED-USE PATHS AND THE ENTIRE PAR WIDTH OF THE WALK. DETECTABLE WARNING SHOULD BE 6" LESS THAN THE PAR/TRAIL WIDTH. ARC LENGTH OF RADIAL DETECTABLE WARNINGS SHOULD NOT BE GREATER THAN 20 FEET.

RECTANGULAR DETECTABLE WARNINGS SHALL BE SETBACK 3" FROM THE BACK OF CURB. RADIAL DETECTABLE WARNINGS SHALL BE SETBACK 3" MINIMUM TO 6" MAXIMUM FROM THE BACK OF CURB.

1. MATCH FULL HEIGHT CURB.
2. 4' MINIMUM DEPTH LANDING REQUIRED ACROSS TOP OF RAMP.
3. 3" HIGH CURB WHEN USING A 3' LONG RAMP, 4" HIGH CURB WHEN USING A 4' LONG RAMP.
4. SEE SHEET 4 OF 6, TYPICAL SIDE TREATMENT OPTIONS, FOR DETAILS ON FLARES AND RETURNED CURBS, WHEN INITIAL LANDING IS AT FULL CURB HEIGHT.
5. DETECTABLE WARNINGS MAY BE PART OF THE 4' X 4' MIN. LANDING AREA IF IT IS NOT FEASIBLE TO CONSTRUCT THE LANDING OUTSIDE OF THE DETECTABLE WARNING AREA.
6. THE GRADE BREAK SHALL BE PERPENDICULAR TO THE BACK OF WALK. THIS WILL ENSURE THAT THE GRADE BREAK IS PERPENDICULAR TO THE DIRECTION OF TRAVEL. (TYPICAL FOR ALL)
7. WHEN ADJACENT TO GRASS, GRADING SHALL ALWAYS BE USED WHEN FEASIBLE. V CURB, IF USED, SHALL BE PLACED OUTSIDE THE SIDEWALK LIMITS WHEN RIGHT OF WAY ALLOWS. WHEN ADJACENT TO PARKING LOTS, CONCRETE OR BITUMINOUS TAPERS SHOULD BE USED OVER V CURB TO REDUCE TRIPPING HAZARDS AND FACILITATE SNOW & ICE REMOVAL.
8. A 7' MIN TOP RADIUS GRADE BREAK REQUIRED TO BE CONSTRUCTIBLE.
9. PAVE FULL WALK WIDTH.
10. "S" SLOPES ON FANS SHALL ONLY BE USED WHEN ALL OTHER FEASIBLE OPTIONS HAVE BEEN EVALUATED AND DEEMED IMPRACTICAL.

LEGEND

THESE LONGITUDINAL SLOPE RANGES SHALL BE THE STARTING POINT. IF SITE CONDITIONS WARRANT, LONGITUDINAL SLOPES UP TO 8.3% OR FLATTER ARE ALLOWED.

- S — INDICATES PEDESTRIAN RAMP - SLOPE SHALL BE BETWEEN 5.0% MINIMUM AND 8.3% MAXIMUM IN THE DIRECTION SHOWN AND THE CROSS SLOPE SHALL NOT EXCEED 2.0%.
- F — INDICATES PEDESTRIAN RAMP - SLOPE SHALL BE GREATER THAN 2.0% AND LESS THAN 5.0% IN THE DIRECTION SHOWN AND CROSS SLOPE SHALL NOT EXCEED 2.0%.
- LANDING AREA - 4' X 4' MIN. (5' X 5' MIN. PREFERRED) DIMENSIONS AND MAX 2.0% SLOPE IN ALL DIRECTIONS. LANDING SHALL BE FULL WIDTH OF INCOMING PARS.
- X" — CURB HEIGHT

REVISION:

APPROVED: JANUARY 23, 2017

OPERATIONS ENGINEER

MINNESOTA DEPARTMENT OF TRANSPORTATION

STATE DESIGN ENGINEER

REVISED:

APPROVED: 1-23-2017

PEDESTRIAN CURB RAMP DETAILS

STANDARD PLAN 5-297.250 | 1 OF 6

I HEREBY CERTIFY THAT THIS PLAN WAS PREPARED BY ME OR UNDER MY DIRECT SUPERVISION AND THAT I AM A DULY LICENSED PROFESSIONAL ENGINEER UNDER THE LAWS OF THE STATE OF MINNESOTA.

SIGNATURE: Patrick Loomis

PATRICK LOOMIS
TYPE NAME

DATE: 04/15/2018

LIC. NO: 49099

CITY OF DULUTH
ENGINEERING DIVISION
411 W. 1ST ST. STE. 211
DULUTH, MN 55802

1690 - STREET PRESERVATION

CITY PROJECT NO.: 1690

STATE AID PROJECT NO.: NA

DRAWN BY: SCA / DJK

ADA 1.6

SHEET NO. 15 OF 36

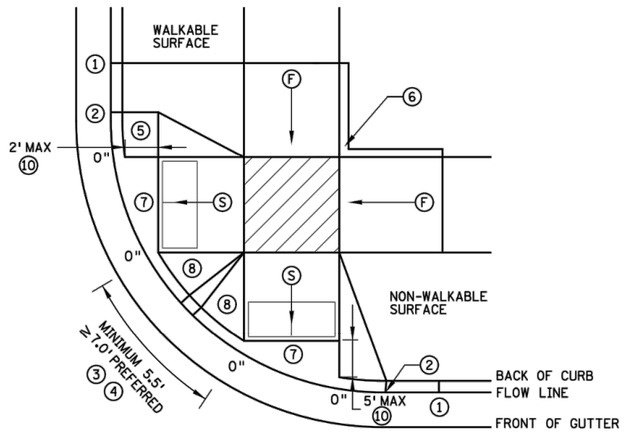

COMBINED DIRECTIONAL ⑨

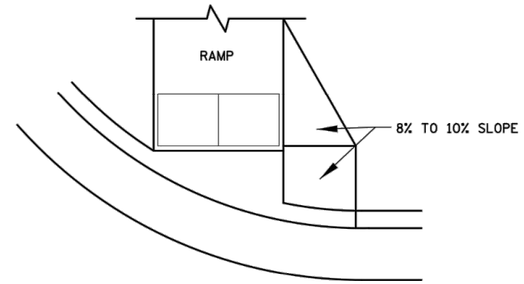

DIRECTIONAL RAMP WALKABLE FLARE

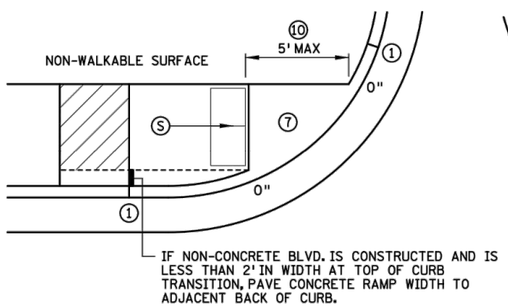

STANDARD ONE-WAY DIRECTIONAL ⑨

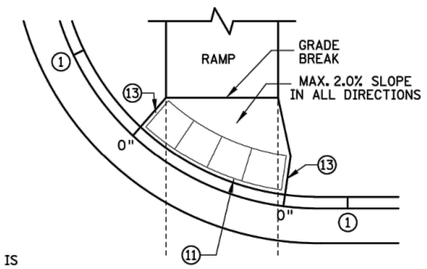

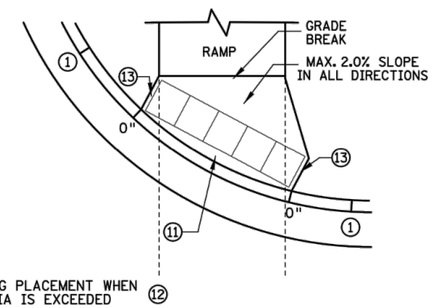

ONE-WAY DIRECTIONAL WITH DETECTABLE WARNING AT BACK OF CURB

NOTES:

LANDINGS SHALL BE LOCATED ANYWHERE THE PEDESTRIAN ACCESS ROUTE (PAR) CHANGES DIRECTION, AT THE TOP OF RAMPS THAT HAVE RUNNING SLOPES GREATER THAN 5.0%, AND IF THE APPROACHING WALK IS INVERSE GRADE.

INITIAL CURB RAMP LANDINGS SHALL BE CONSTRUCTED WITHIN 15' FROM THE BACK OF CURB, WITH 6' FROM THE BACK OF CURB BEING THE PREFERRED DISTANCE. ONLY APPLICABLE WHEN THE INITIAL RAMP RUNNING SLOPE IS OVER 5.0%.

SECONDARY CURB RAMP LANDINGS ARE REQUIRED FOR EVERY 30" OF VERTICAL RISE WHEN THE LONGITUDINAL SLOPE IS GREATER THAN 5.0%.

CONTRACTION JOINTS SHALL BE CONSTRUCTED ALONG ALL GRADE BREAKS WITHIN THE PAR. 1/4" DEEP VISUAL JOINTS SHALL BE USED AT THE TOP GRADE BREAK OF CONCRETE FLARES ADJACENT TO WALKABLE SURFACES.

ALL GRADE BREAKS WITHIN THE PAR SHALL BE PERPENDICULAR TO THE PATH OF TRAVEL. THUS BOTH SIDES OF A SLOPED WALKING SURFACE MUST BE EQUAL LENGTH.

TO ENSURE INITIAL RAMPS AND INITIAL LANDINGS ARE PROPERLY CONSTRUCTED, LANDINGS SHALL BE CAST SEPARATELY. FOLLOW SIDEWALK REINFORCEMENT DETAILS ON SHEET 6 AND THE ADA SPECIAL PROVISION (PROSECUTION OF WORK).

TOP OF CURB SHALL MATCH PROPOSED ADJACENT WALK GRADE.

WHEN THE BOULEVARD IS 4' WIDE OR LESS, THE TOP OF CURB TAPER SHALL MATCH THE RAMP SLOPES TO REDUCE NEGATIVE BOULEVARD SLOPES FROM THE TOP BACK OF CURB TO THE PAR.

ALL RAMP TYPES SHOULD HAVE A MINIMUM 3' LONG RAMP LENGTH.

4' MINIMUM WIDTH OF DETECTABLE WARNING IS REQUIRED FOR ALL RAMPS. DETECTABLE WARNINGS SHALL CONTINUOUSLY EXTEND FOR A MIN. OF 24" IN THE PATH OF TRAVEL. DETECTABLE WARNING TO COVER ENTIRE WIDTH OF SHARED-USE PATH AND THE ENTIRE PAR WIDTH OF THE WALK. DETECTABLE WARNING SHOULD BE 6" LESS THAN THE PAR/PATH WIDTH. ARC LENGTH OF RADIAL DETECTABLE WARNINGS SHOULD NOT BE GREATER THAN 20 FEET.

RADIAL DETECTABLE WARNINGS SHALL BE SETBACK 3" MINIMUM TO 6" MAXIMUM FROM THE BACK OF CURB. SEE NOTES ⑩ & ⑪ FOR INFORMATION REGARDING RECTANGULAR DETECTABLE WARNING PLACEMENT.

① MATCH FULL CURB HEIGHT.

② 3" HIGH CURB WHEN USING A 3' LONG RAMP
4" HIGH CURB WHEN USING A 4' LONG RAMP.

③ 3" MINIMUM CURB HEIGHT (5.5' MIN. DISTANCE REQUIRED BETWEEN DOMES)
4" PREFERRED (7' MIN. DISTANCE REQUIRED BETWEEN DOMES).

④ THE "BUMP" IN BETWEEN THE RAMPS SHOULD NOT BE IN THE PATH OF TRAVEL FOR COMBINED DIRECTIONAL RAMPS. IF THIS OCCURS MODIFY THE RAMP LOCATION OR SWITCH RAMP TO A FAN/DEPRESSED CORNER.

⑤ WHEN USING CONCRETE PAVED FLARES ON THE OUTSIDE OF DIRECTIONAL RAMPS, AND ADJACENT TO A WALKABLE SURFACE, DIRECTIONAL RAMP FLARES SHOULD BE USED. SEE THE DETAIL ON THIS SHEET.

⑥ GRADING SHALL ALWAYS BE USED WHEN FEASIBLE. V CURB, IF USED, SHALL BE PLACED OUTSIDE THE SIDEWALK LIMITS WHEN RIGHT OF WAY ALLOWS. WHEN ADJACENT TO PARKING LOTS, CONCRETE OR BITUMINOUS TAPERS SHOULD BE USED OVER V CURB TO REDUCE TRIPPING HAZARDS AND FACILITATE SNOW & ICE REMOVAL.

⑦ MAX. 2.0% SLOPE IN ALL DIRECTIONS IN FRONT OF GRADE BREAK AND DRAIN TO FLOW LINE. SHALL BE CONSTRUCTED INTEGRAL WITH CURB AND GUTTER.

⑧ 8% TO 10% WALKABLE FLARE.

⑨ PLACE DOMES AT THE BACK OF CURB WHEN ALLOWABLE SETBACK CRITERIA IS EXCEEDED.

⑩ FRONT EDGE OF DETECTABLE WARNING SHALL BE SET BACK 2' MAXIMUM WHEN ADJACENT TO WALKABLE SURFACE, AND 5' MAXIMUM WHEN ADJACENT TO NON-WALKABLE SURFACE WITH ONE CORNER SET 3" FROM BACK OF CURB. A WALKABLE SURFACE IS DEFINED AS A PAVED SURFACE ADJACENT TO A CURB RAMP WITHOUT RAISED OBSTACLES THAT COULD MISTAKENLY BE TRAVERSED BY A USER WHO IS VISUALLY IMPAIRED.

⑪ RECTANGULAR DETECTABLE WARNINGS MAY BE SETBACK UP TO 9" FROM THE BACK OF CURB WITH CORNERS SET 3" FROM BACK OF CURB. IF 9" SETBACK IS EXCEEDED USE RADIAL DETECTABLE WARNINGS.

⑫ FOR DIRECTIONAL RAMPS WITH THE DETECTABLE WARNINGS PLACED AT THE BACK OF CURB, THE DETECTABLE WARNINGS SHALL COVER THE ENTIRE WIDTH OF THE WALK/PATH. THIS ENSURES A DETECTABLE EDGE AND HELPS ELIMINATE THE CURB TAPER OBSTRUCTING THE PATH OF PEDESTRIAN TRAVEL.

⑬ THE CONCRETE WALK SHALL BE FORMED AND CONSTRUCTED PERPENDICULAR TO THE BACK OF CURB. MAINTAIN 3" BETWEEN EDGE OF DOMES AND EDGE OF CONCRETE.

⑭ TO BE USED FOR ALL DIRECTIONAL RAMPS, EXCEPT WHERE DOMES ARE PLACED ALONG THE BACK OF CURB.

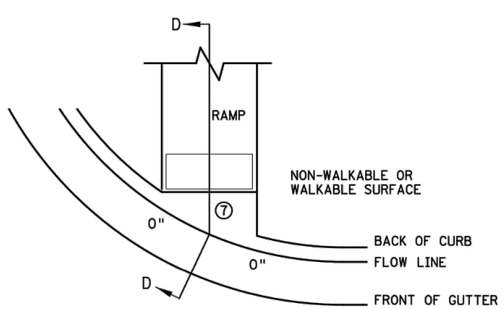

CURB FOR DIRECTIONAL RAMPS ⑭

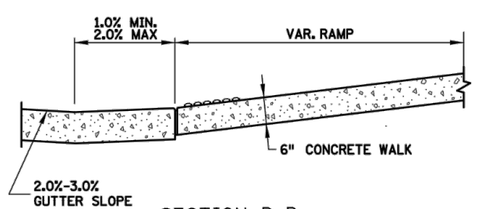

SECTION D-D

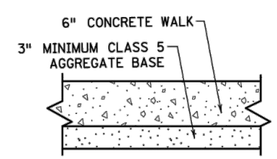

TYPICAL SIDEWALK SECTION WITHIN INTERSECTION CORNER

LEGEND

THESE LONGITUDINAL SLOPE RANGES SHALL BE THE STARTING POINT. IF SITE CONDITIONS WARRANT, LONGITUDINAL SLOPES UP TO 8.3% OR FLATTER ARE ALLOWED.

Ⓢ INDICATES PEDESTRIAN RAMP - SLOPE SHALL BE BETWEEN 5.0% MINIMUM AND 8.3% MAXIMUM IN THE DIRECTION SHOWN AND THE CROSS SLOPE SHALL NOT EXCEED 2.0%.

Ⓕ INDICATES PEDESTRIAN RAMP - SLOPE SHALL BE GREATER THAN 2.0% AND LESS THAN 5.0% IN THE DIRECTION SHOWN AND CROSS SLOPE SHALL NOT EXCEED 2.0%.

LANDING AREA - 4' X 4' MIN. (5' X 5' MIN. PREFERRED) DIMENSIONS AND MAX 2.0% SLOPE IN ALL DIRECTIONS. LANDING SHALL BE FULL WIDTH OF INCOMING PARS.

X" CURB HEIGHT

REVISION:

APPROVED: JANUARY 23, 2017

OPERATIONS ENGINEER

MINNESOTA DEPARTMENT OF TRANSPORTATION

STATE DESIGN ENGINEER

REVISED:

APPROVED: 1-23-2017

PEDESTRIAN CURB RAMP DETAILS

STANDARD PLAN 5-297.250 | 2 OF 6

I HEREBY CERTIFY THAT THIS PLAN WAS PREPARED BY ME OR UNDER MY DIRECT SUPERVISION AND THAT I AM A DULY LICENSED PROFESSIONAL ENGINEER UNDER THE LAWS OF THE STATE OF MINNESOTA.

SIGNATURE: Patrick Loomis

PATRICK LOOMIS
TYPE NAME

DATE: 04/15/2018

LIC. NO: 49099

CITY OF DULUTH
ENGINEERING DIVISION
411 W. 1ST ST. STE. 211
DULUTH, MN 55802

1690 – STREET PRESERVATION

CITY PROJECT NO.: 1690

STATE AID PROJECT NO.: NA

DRAWN BY: SCA / DJK

ADA 2.6

SHEET NO. 16 OF 36

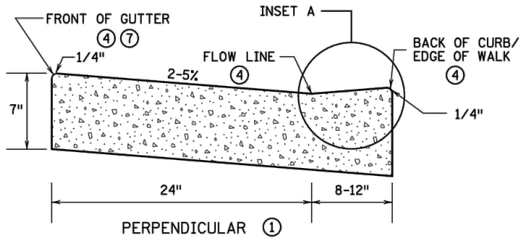

PERPENDICULAR ①

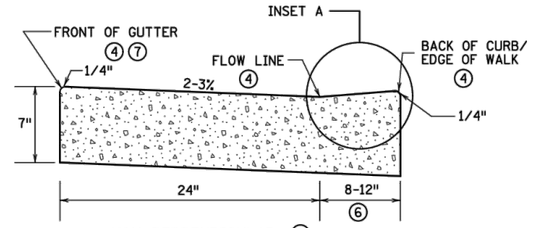

NON PERPENDICULAR ②

PEDESTRIAN ACCESS ROUTE CURB & GUTTER DETAIL

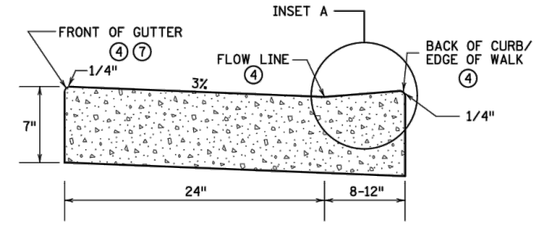

FOR CURB MACHINE PLACEMENT AROUND RADIUS ③

(REGARDLESS OF RAMP TYPE)

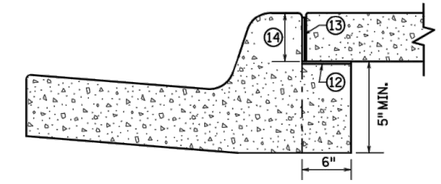

OPTIONAL SILL CURB WHEN SIDEWALK IS AT BACK OF CURB

CONCRETE SILL TO BE USED ONLY WHEN SPECIFIED IN THE PLAN.

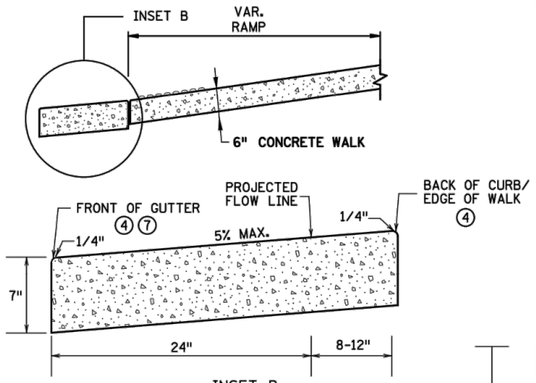

INSET B

OUTFLOW GUTTER ⑧

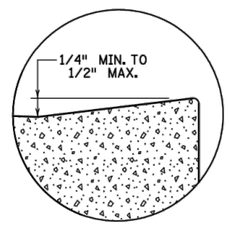

INSET A

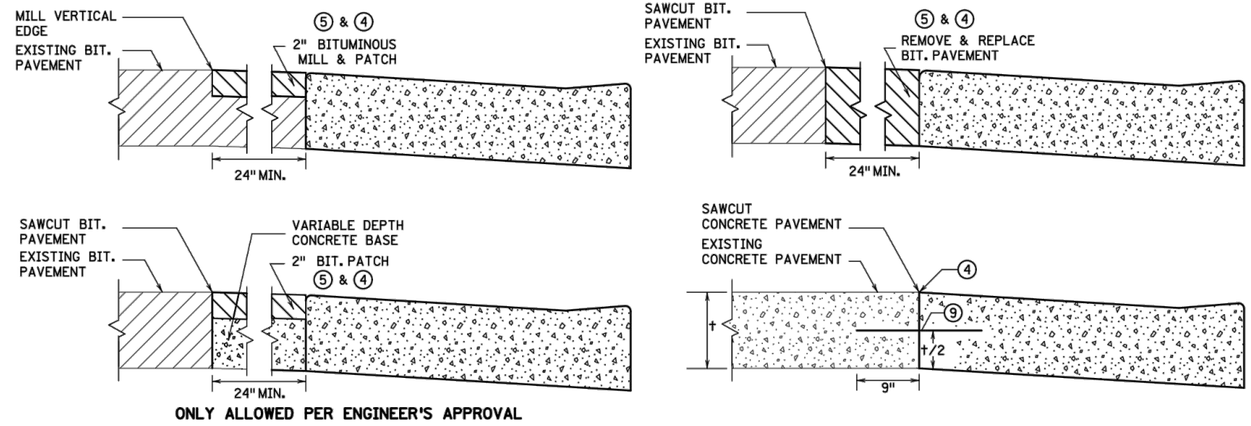

ONLY ALLOWED PER ENGINEER'S APPROVAL

PAVEMENT TREATMENT OPTIONS IN FRONT OF CURB & GUTTER

FOR USE ON CURB RAMP RETROFITS

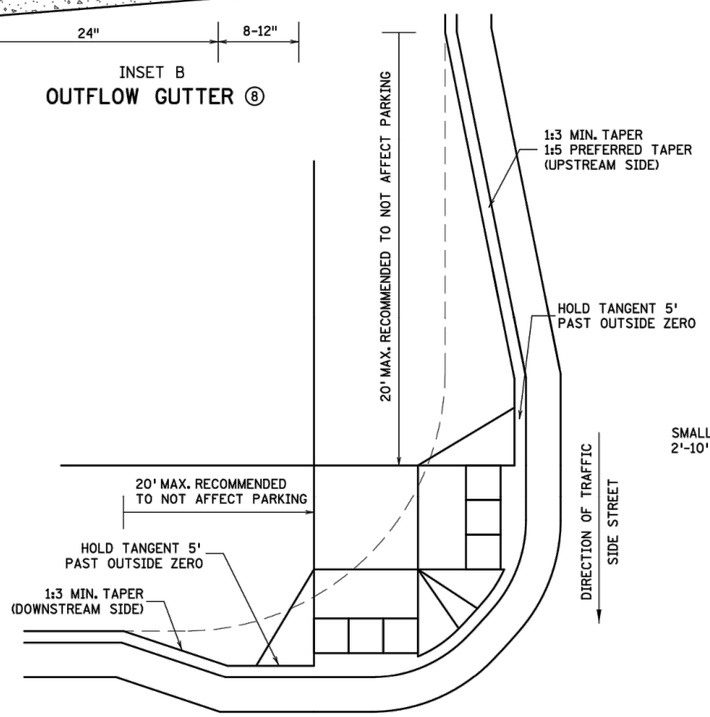

ADA CURB EXTENSION WITH COMPOUND RADIUS (BUMP OUT) ⑪

DIRECTION OF TRAFFIC

MAIN STREET

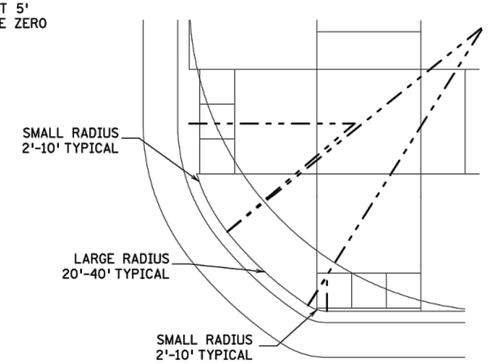

COMBINED DIRECTIONAL ⑩ (COMPOUND RADIUS)

NOTES:

POSITIVE FLOW LINE DRAINAGE SHALL BE MAINTAINED THROUGH THE PEDESTRIAN ACCESS ROUTE (PAR) AT A 2% MAXIMUM.

NO PONDING SHALL BE PRESENT IN THE PAR.

ANY VERTICAL LIP THAT OCCURS AT THE FLOW LINE SHALL NOT BE GREATER THAN 1/4 INCH.

① FOR USE AT CURB CUTS WHERE THE PEDESTRIAN'S PATH OF TRAVEL IS ASSUMED PERPENDICULAR TO THE GUTTER FLOW LINE. RAMP TYPES INCLUDE: PERPENDICULAR, TIERED PERPENDICULAR, PARALLEL, AND DIAGONAL RAMPS.

② FOR USE AT CURB RAMPS WHERE THE PEDESTRIAN'S PATH OF TRAVEL IS ASSUMED NON PERPENDICULAR TO THE GUTTER FLOW LINE. RAMP TYPES INCLUDE: FANS & DEPRESSED CORNERS.

③ BEGIN GUTTER SLOPE TRANSITION 10' OUTSIDE OF ALL CURB RAMPS.

④ THERE SHALL BE NO VERTICAL DISCONTINUITIES GREATER THAN 1/4".

⑤ ELEVATION CHANGE TAKES PLACE FROM THE EXISTING TO NEW FRONT OF GUTTER. PATCH IS USED TO MATCH THE NEW GUTTER FACE INTO THE EXISTING ROADWAY.

⑥ VARIABLE WIDTH FOR DIRECTIONAL CURB APPLICATIONS. SEE SHEET 2 FOR DIRECTIONAL CURB SLOPE REQUIREMENTS.

⑦ TOP FRONT OF GUTTER SHALL BE CONSTRUCTED FLUSH WITH PROPOSED ADJACENT PAVEMENT ELEVATION. TOP 1.5" OF THE GUTTER FACE MUST BE A FORMED EDGE. PAR GUTTER SHALL NOT BE OVERLAID.

⑧ SHOULD BE USED AT VERTICALLY CONSTRAINED AREAS WHEN AT A DRAINAGE HIGH POINT OR SUPER ELEVATED ROADWAY SEGMENTS.

⑨ DRILL AND GROUT NO. 4 EPOXY-COATED 18" LONG TIE BARS AT 30" CENTER TO CENTER INTO EXISTING CONCRETE PAVEMENT 1' MINIMUM FROM ALL JOINTS.

⑩ HELPS PROVIDE TWO SEPARATE RAMPS, REDUCES THE DOME SETBACK LENGTH AND MINIMIZES DIRECTIONAL CURB. THIS RADIUS DESIGN CLOSELY FOLLOWS THE TURNING VEHICLE PATH WHILE OPTIMIZING CURB RAMP LENGTH.

⑪ CURB EXTENSIONS SHOULD BE USED IN VERTICALLY CONSTRAINED AREAS, USUALLY IN DOWNTOWN ROADWAY SEGMENTS WHERE ON-STREET PARKING IS AVAILABLE. CURB EXTENSIONS SHOULD BE CONSIDERED FOR APS INTERSECTIONS WHERE SPACE IS LIMITED. PUSH BUTTONS MUST MEET APS CRITERIA AS DESCRIBED IN THE PUSH BUTTON LOCATION DETAIL SHEET.

⑫ PLACE BOND BREAKER BETWEEN WALK AND TOP OF SILL.

⑬ 1/2" PREFORMED JOINT FILLER PER MNDOT SPEC. 3702.

⑭ DIMENSION TO BE SAME AS SIDEWALK THICKNESS, 4" MIN.

REVISION:

APPROVED: JANUARY 23, 2017

OPERATIONS ENGINEER

REVISED:

APPROVED: 1-23-2017

STATE DESIGN ENGINEER

PEDESTRIAN CURB RAMP DETAILS

STANDARD PLAN 5-297.250 | 3 OF 6

I HEREBY CERTIFY THAT THIS PLAN WAS PREPARED BY ME OR UNDER MY DIRECT SUPERVISION AND THAT I AM A DULY LICENSED PROFESSIONAL ENGINEER UNDER THE LAWS OF THE STATE OF MINNESOTA.

SIGNATURE: Patrick Loomis

PATRICK LOOMIS
TYPE NAME

DATE: 04/15/2018

LIC. NO: 49099

CITY OF DULUTH
ENGINEERING DIVISION
411 W. 1ST ST. STE. 211
DULUTH, MN 55802

1690 – STREET PRESERVATION

CITY PROJECT NO.: 1690

STATE AID PROJECT NO.: NA

DRAWN BY: SCA / DJK

ADA 3. 6

SHEET NO. 17 OF 36

i:\pwu\engineer\projects\1500-1999\1690_2018_street_preservation\drawings\ada details_2017.dwg 5/2/2018 1:36 PM

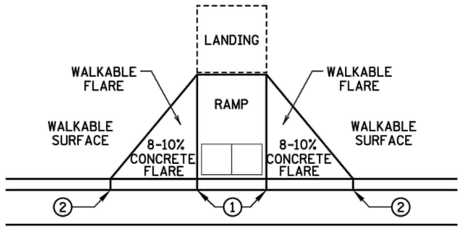

PAVED FLARES
ADJACENT TO WALKABLE SURFACE

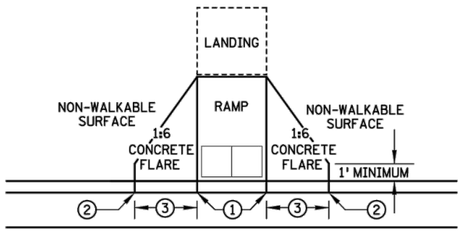

PAVED FLARES
ADJACENT TO NON-WALKABLE SURFACE

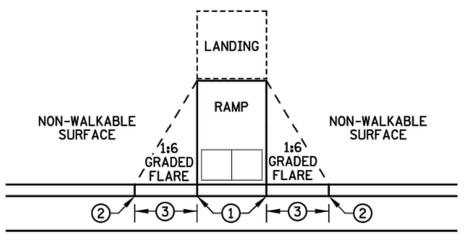

GRADED FLARES

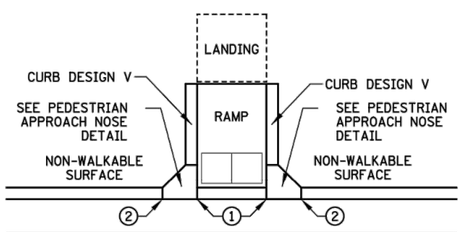

RETURNED CURB ⑤

TYPICAL SIDE TREATMENT OPTIONS ④ ⑪

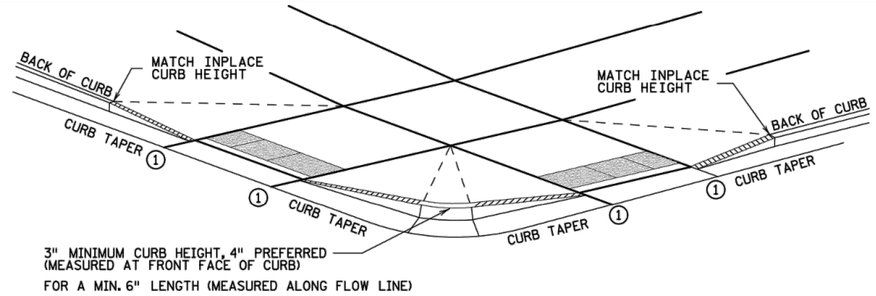

DETECTABLE EDGE WITH ⑧ CURB AND GUTTER

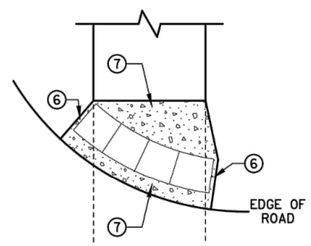

RADIAL DETECTABLE WARNING

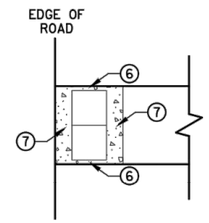

RECTANGULAR DETECTABLE WARNING

DETECTABLE EDGE WITHOUT CURB AND GUTTER

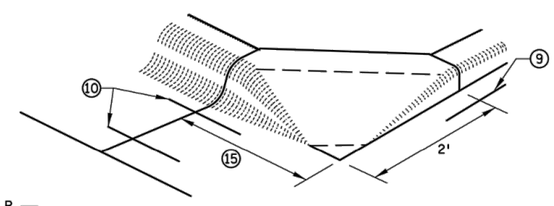

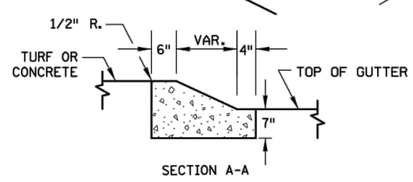

SECTION A-A

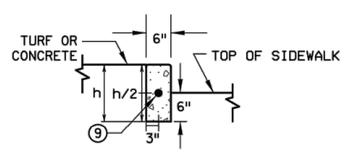

SECTION B-B

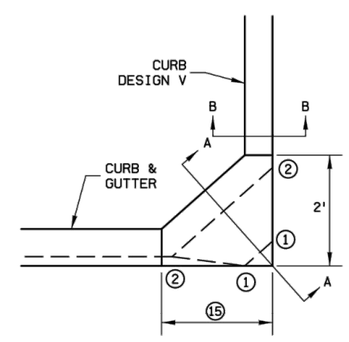

PEDESTRIAN APPROACH NOSE DETAIL
(FOR RETURNED CURB SIDE TREATMENT)

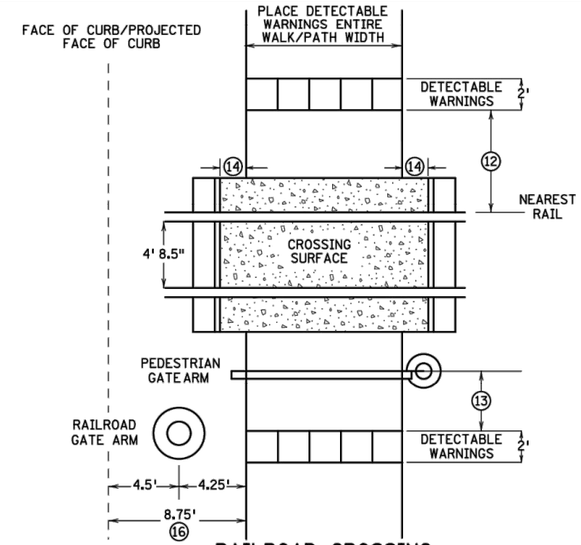

RAILROAD CROSSING PLAN VIEW

NOTES:

SEE STANDARD PLATE 7038 AND THIS SHEET FOR ADDITIONAL DETAILS ON DETECTABLE WARNING.

A WALKABLE SURFACE IS DEFINED AS A PAVED SURFACE ADJACENT TO A CURB RAMP WITHOUT RAISED OBSTACLES THAT COULD MISTAKENLY BE TRAVERSED BY A USER WHO IS VISUALLY IMPAIRED.

CONCRETE FLARE LENGTHS ADJACENT TO NON-WALKABLE SURFACES SHOULD BE LESS THAN 8' LONG MEASURED ALONG THE RAMPS FROM THE BACK OF CURB.

① 0" CURB HEIGHT.

② FULL CURB HEIGHT.

③ 2' FOR 4" HIGH CURB AND 3' FOR 6" HIGH CURB.

④ SIDE TREATMENTS ARE APPLICABLE TO ALL RAMP TYPES AND SHOULD BE IMPLEMENTED AS NEEDED AS FIELD CONDITIONS DICTATE. THE ENGINEER SHALL DETERMINE THE RAMP SIDE TREATMENTS BASED ON MAINTENANCE OF BOTH ROADWAY AND SIDEWALK, ADJACENT PROPERTY CONSIDERATIONS, AND MITIGATING CONSTRUCTION IMPACTS.

⑤ TYPICALLY USED FOR MEDIANS AND ISLANDS.

⑥ WHEN NO CONCRETE FLARES ARE PROPOSED, THE CONCRETE WALK SHALL BE FORMED AND CONSTRUCTED PERPENDICULAR TO THE EDGE OF ROADWAY. MAINTAIN 3" MAX. BETWEEN EDGE OF DOMES AND EDGE OF CONCRETE.

⑦ IF NO CURB AND GUTTER IS PLACED IN RURAL SECTIONS, DETECTABLE WARNINGS SHALL BE PLACED 1' FROM THE EDGE OF BITUMINOUS ROADWAY AND/OR BITUMINOUS SHARED-USE PATH TO PROVIDE VISUAL CONTRAST.

⑧ ALL CONSTRUCTED CURBS MUST HAVE A CONTINUOUS DETECTABLE EDGE FOR THE VISUALLY IMPAIRED. THIS DETECTABLE EDGE REQUIRES DETECTABLE WARNINGS WHEREVER THERE IS ZERO-INCH HIGH CURB. CURB TAPERS ARE CONSIDERED A DETECTABLE EDGE WHEN THE TAPER STARTS WITHIN 3" OF THE EDGE OF THE DETECTABLE WARNINGS AND UNIFORMLY RISES TO A 3-INCH MINIMUM CURB HEIGHT. ANY CURB NOT PART OF A CURB TAPER AND LESS THAN 3 INCHES IN HEIGHT IS NOT CONSIDERED A DETECTABLE EDGE AND THEREFORE IS NOT COMPLIANT WITH ACCESSIBILITY STANDARDS.

⑨ DRILL AND GROUT 1 - NO. 4 12" LONG REINFORCEMENT BAR (EPOXY COATED) WITH 3" MIN. COVER. REINFORCEMENT BARS ARE NOT NEEDED IF THE APPROACH NOSE IS POURED INTEGRAL WITH THE V CURB.

⑩ DRILL AND GROUT 2 - NO. 4 12" LONG REINFORCEMENT BARS (EPOXY COATED) WITH 3" MIN. COVER. REINFORCEMENT BARS ARE NOT NEEDED IF THE APPROACH NOSE IS POURED INTEGRAL WITH THE CURB AND GUTTER.

⑪ SIDE TREATMENT EXAMPLES SHOWN ARE WHEN THE INITIAL LANDING IS APPROXIMATELY LEVEL WITH THE FULL HEIGHT CURB (I.E. 6' LONG RAMP FOR 6" HIGH CURB). WHEN THE INITIAL LANDING IS MORE THAN 1" BELOW FULL HEIGHT CURB REFER TO SHEETS 1 & 2 TO MODIFY THE CURB HEIGHT TAPERS AND MAINTAIN POSITIVE BOULEVARD DRAINAGE.

⑫ NEAREST EDGE OF DETECTABLE WARNING SURFACES SHALL BE PLACED 12' MINIMUM TO 15' MAXIMUM FROM THE NEAREST RAIL. FOR SKEWED RAILWAYS IN NO INSTANCE SHALL THE DETECTABLE WARNING BE CLOSER THAN 12' MEASURED PERPENDICULAR TO THE NEAREST RAIL.

⑬ WHEN PEDESTRIAN GATES ARE PROVIDED, DETECTABLE WARNING SURFACES SHALL BE PLACED ON THE SIDE OF THE GATES OPPOSITE THE RAIL, 2' FROM THE APPROACHING SIDE OF THE GATE ARM. THIS CRITERIA GOVERNS OVER NOTE ⑫.

⑭ CROSSING SURFACE SHALL EXTEND 2' MINIMUM PAST THE OUTSIDE EDGE OF WALK OR SHARED-USE PATH.

⑮ 3' FOR MEDIANS AND SPLITTER ISLANDS. NOSE CAN BE REDUCED TO 2' ON FREE RIGHT ISLANDS.

⑯ SIDEWALK TO BE PLACED 8.75' MIN. FROM THE FACE OF CURB/PROJECTED FACE OF CURB. THIS ENSURES MIN. CLEARANCE BETWEEN THE SIDEWALK AND GATE ARM COUNTERWEIGHT SUPPORTS.

REVISION:
APPROVED: JANUARY 23, 2017
OPERATIONS ENGINEER

MINNESOTA DEPARTMENT OF TRANSPORTATION
STATE DESIGN ENGINEER
REVISED:
APPROVED: 1-23-2017

PEDESTRIAN CURB RAMP DETAILS

STANDARD PLAN 5-297.250 | 4 OF 6

I HEREBY CERTIFY THAT THIS PLAN WAS PREPARED BY ME OR UNDER MY DIRECT SUPERVISION AND THAT I AM A DULY LICENSED PROFESSIONAL ENGINEER UNDER THE LAWS OF THE STATE OF MINNESOTA.

SIGNATURE: Patrick Loomis
PATRICK LOOMIS
TYPE NAME

DATE: 04/15/2018
LIC. NO: 49099

CITY OF DULUTH
ENGINEERING DIVISION
411 W. 1ST ST. STE. 211
DULUTH, MN 55802

1690 – STREET PRESERVATION

CITY PROJECT NO.: 1690
STATE AID PROJECT NO.: NA

DRAWN BY: SCA / DJK
ADA 4.6
SHEET NO. 18 OF 36

i:\pwu\engineer\projects\1500-1999\1690_2018_street_preservation\drawings\ada details_2017.dwg
5/2/2018
1:36 PM

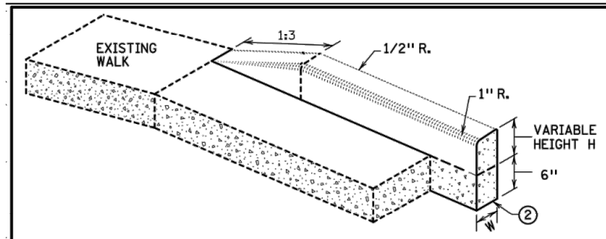

V CURB ADJACENT TO LANDSCAPE

CURB WITHIN SIDEWALK LIMITS

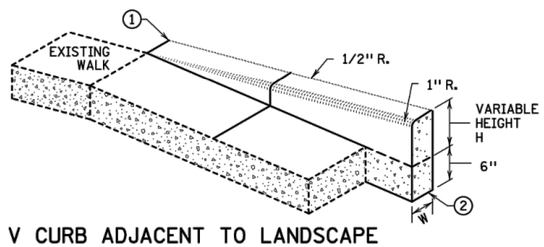

V CURB ADJACENT TO LANDSCAPE

CURB OUTSIDE SIDEWALK LIMITS

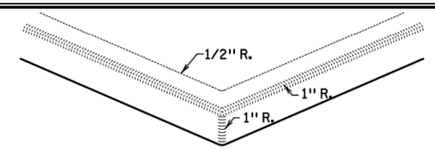

V CURB INTERSECTION

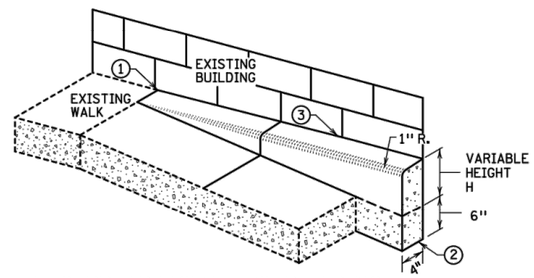

V CURB ADJACENT TO BUILDING OR BARRIER

CONCRETE CURB DESIGN V	
CURB HEIGHT H	CURB WIDTH W
<6"	4"
≥6"	6"

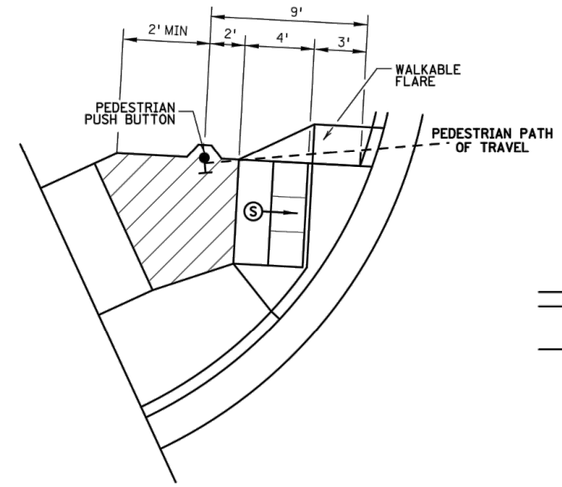

SEMI-DIRECTIONAL RAMP (3,4,9)

3' DOME SETBACK, 4' LONG RAMP AND PUSH BUTTON 9' FROM THE BACK OF CURB

PRIMARILY USED FOR APS APPLICATIONS WHERE THE PAR DOES NOT CONTINUE PAST THE PUSH BUTTON (DEAD-END SIDEWALK)

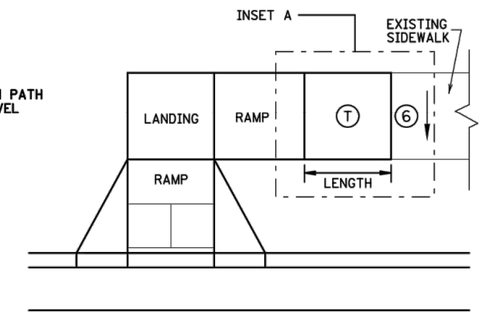

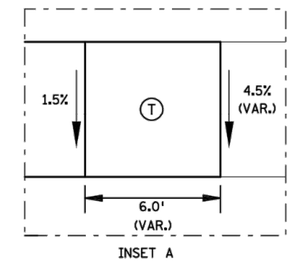

TRANSITION PANEL ④⑤

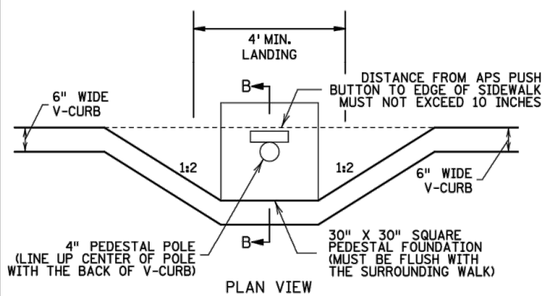

PLAN VIEW

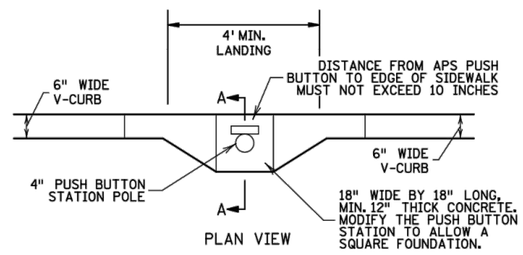

PLAN VIEW

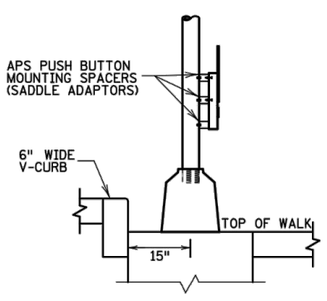

SECTION B-B

SIGNAL PEDESTAL & PUSH BUTTON (V-CURB)

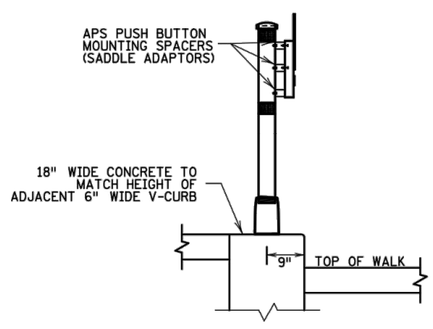

SECTION A-A

PUSH BUTTON STATION (V-CURB)

NOTES:

A WALKABLE FLARE IS AN 8-10% CONCRETE FLARE THAT IS REQUIRED WHEN THE FLARE IS ADJACENT TO A WALKABLE SURFACE, OR WHEN THE PEDESTRIAN PATH OF TRAVEL OF A PUSH BUTTON TRAVERSES THE FLARE.

ALL V CURB CONTRACTION JOINTS SHALL MATCH CONCRETE WALK JOINTS.

WHERE RIGHT-OF-WAY ALLOWS, USE OF V CURB SHOULD BE MINIMIZED. GRADING ADJACENT TURF OR SLOPING ADJACENT PAVEMENT IS PREFERRED.

V CURB SHALL BE PLACED OUTSIDE THE SIDEWALK LIMITS WHEN RIGHT OF WAY ALLOWS.

V CURB NEXT TO BUILDING SHALL BE A 4" WIDTH AND SHALL MATCH PREVIOUS TOP OF SIDEWALK ELEVATIONS.

1. END TAPERS AT TRANSITION SECTION SHALL MATCH INPLACE SIDEWALK GRADES.
2. ALL V CURB SHALL MATCH BOTTOM OF ADJACENT WALK.
3. EDGE BETWEEN NEW V CURB AND INPLACE STRUCTURE SHALL BE SEALED AND BOND BREAKER SHALL BE USED BETWEEN EXISTING STRUCTURE AND PLACED V-CURB.
4. THE MAX. RATE OF CROSS SLOPE TRANSITIONING IS 1' LINEAR FOOT OF SIDEWALK PER HALF PERCENT CROSS SLOPE. WHEN PAR WIDTH IS GREATER THAN 6' OR THE RUNNING SLOPE IS GREATER THAN 5%, DOUBLE THE CALCULATED TRANSITION LENGTH.
5. TRANSITION PANELS ARE TO ONLY BE USED AFTER THE RAMP, OR IF NEEDED, LANDING ARE AT THE FULL CURB HEIGHT (TYPICAL SECTION).
6. EXISTING CROSS SLOPE GREATER THAN 2.0%.

LEGEND

THESE LONGITUDINAL SLOPE RANGES SHALL BE THE STARTING POINT. IF SITE CONDITIONS WARRANT, LONGITUDINAL SLOPES UP TO 8.3% OR FLATTER ARE ALLOWED.

- (S) INDICATES PEDESTRIAN RAMP - SLOPE SHALL BE BETWEEN 5.0% MINIMUM AND 8.3% MAXIMUM IN THE DIRECTION SHOWN AND THE CROSS SLOPE SHALL NOT EXCEED 2.0%.
- LANDING AREA - 4' X 4' MIN. (5' X 5' MIN. PREFERRED) DIMENSIONS AND MAX 2.0% SLOPE IN ALL DIRECTIONS. LANDING SHALL BE FULL WIDTH OF INCOMING PARS.
- (T) TRANSITION PANEL(S) - TO BE USED FOR TRANSITIONING THE CROSS-SLOPE OF A RAMP TO THE EXISTING WALK CROSS-SLOPE. RATE OF TRANSITION SHOULD BE 0.5% PER 1 LINEAR FOOT OF WALK. SEE THIS SHEET FOR ADDITIONAL INFORMATION.

REVISION:

APPROVED: JANUARY 23, 2017

OPERATIONS ENGINEER

REVISED:

APPROVED: 1-23-2017

STATE DESIGN ENGINEER

PEDESTRIAN CURB RAMP DETAILS

STANDARD PLAN 5-297.250 | **5 OF 6**

I HEREBY CERTIFY THAT THIS PLAN WAS PREPARED BY ME OR UNDER MY DIRECT SUPERVISION AND THAT I AM A DULY LICENSED PROFESSIONAL ENGINEER UNDER THE LAWS OF THE STATE OF MINNESOTA.

SIGNATURE: Patrick Loomis

PATRICK LOOMIS
TYPE NAME

DATE: 04/15/2018

LIC. NO: 49099

CITY OF DULUTH
ENGINEERING DIVISION
411 W. 1ST ST. STE. 211
DULUTH, MN 55802

1690 – STREET PRESERVATION

CITY PROJECT NO.: 1690 | STATE AID PROJECT NO.: NA

DRAWN BY: SCA / DJK

ADA 5.6

SHEET NO. 19 OF 36

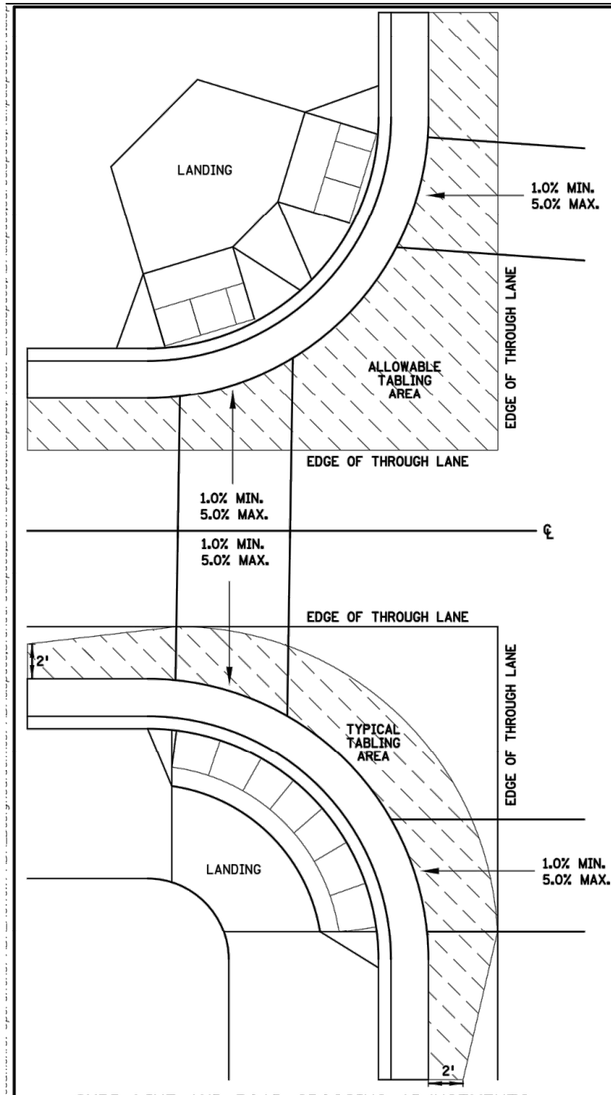

CURB LINE AND ROAD CROSSING ADJUSTMENTS

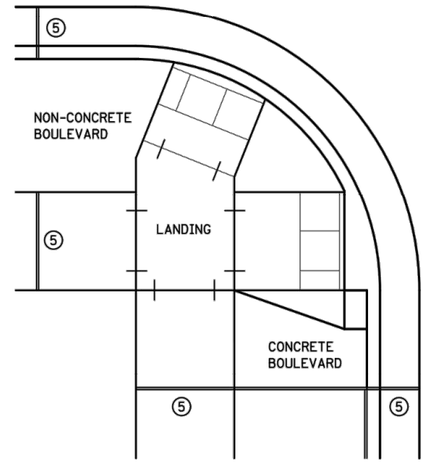

EXPANSION MATERIAL PLACEMENT FOR CONCRETE AND BITUMINOUS ROADWAYS

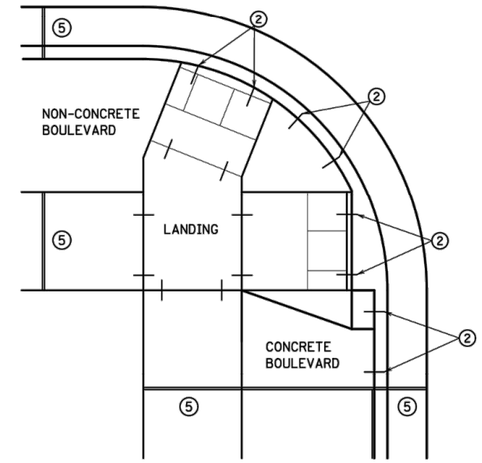

OPTIONAL CURB LINE REINFORCEMENT PLACEMENT ON BITUMINOUS ROADWAYS ④

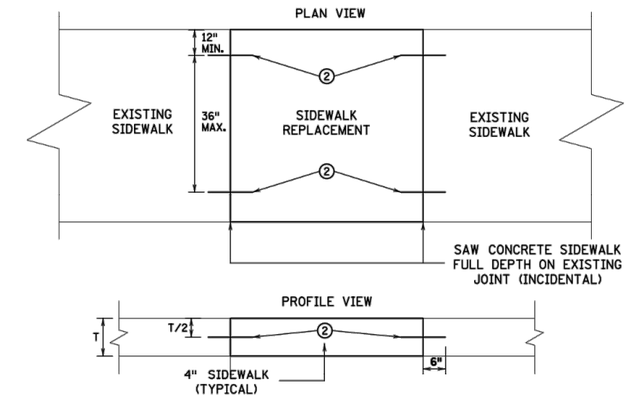

OPTIONAL SIDEWALK REINFORCEMENT

SIDEWALK REINFORCEMENT TO BE USED ONLY WHEN SPECIFIED IN THE PLAN.

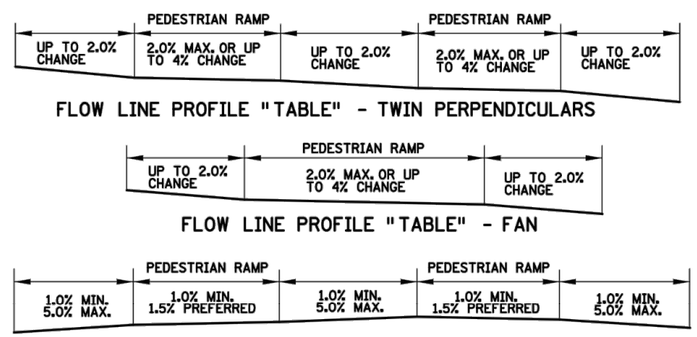

FLOW LINE PROFILE "TABLE" - TWIN PERPENDICULARS

FLOW LINE PROFILE "TABLE" - FAN

FLOW LINE PROFILE RAISE - TWIN PERPENDICULARS

FLOW LINE PROFILE RAISE - FAN

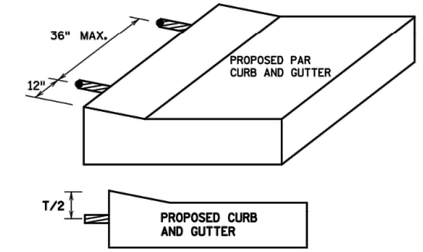

OPTIONAL CURB LINE REINFORCEMENT DETAILS ②④

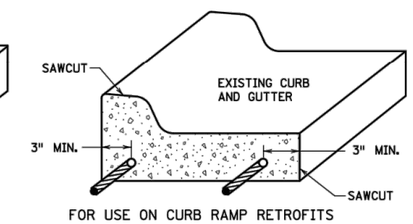

FOR USE ON CURB RAMP RETROFITS

CURB AND GUTTER REINFORCEMENT ③

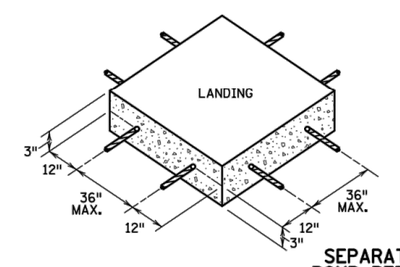

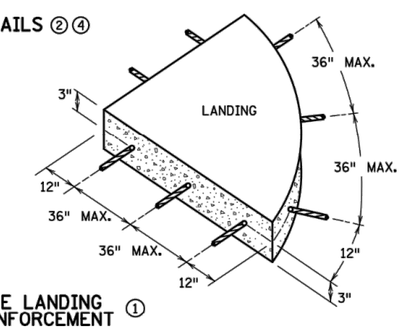

SEPARATE LANDING POUR REINFORCEMENT ①

"TABLING" OF CROSSWALKS MEANS MAINTAINING LESS THAN 2% CROSS SLOPE WITHIN A CROSSWALK, IS REQUIRED WHEN A ROADWAY IS IN A STOP OR YIELD CONDITION AND THE PROJECT SCOPE ALLOWS.

RECONSTRUCTION PROJECTS: ON FULL PAVEMENT REPLACEMENT PROJECTS "TABLING" OF ENTIRE CROSSWALK SHALL OCCUR WHEN FEASIBLE.

MILL & OVERLAY PROJECTS: "TABLING" OF FLOW LINES, IN FRONT OF THE PEDESTRIAN RAMP, IS REQUIRED WHEN THE EXISTING FLOW LINE IS GREATER THAN 2%. WARPING OF THE BITUMINOUS PAVEMENT CAN NOT EXTEND INTO THE THROUGH LANE. TABLE THE FLOW LINE TO 2% OR AS MUCH AS POSSIBLE WHILE ADHERING TO THE FOLLOWING CRITERIA:

1) 1.0% MIN. CROSS-SLOPE OF THE ROAD
2) 5.0% MAX. CROSS-SLOPE OF THE ROAD
3) "TABLE" FLOW LINE UP TO 4% CHANGE FROM EXISTING SLOPE IN FRONT OF PEDESTRIAN RAMP
4) UP TO 2% CHANGE IN FLOW LINE FROM EXISTING SLOPE BEYOND THE PEDESTRIAN CURB RAMP

STAND-ALONE ADA RETROFITS: FOLLOW MILL & OVERLAY CRITERIA ABOVE HOWEVER ALL PAVEMENT WARPING IS DONE WITH BITUMINOUS PATCHING ON BITUMINOUS ROADWAYS AND FULL-DEPTH APRON REPLACEMENT ON CONCRETE ROADWAYS.

RAISING OF CURB LINES SHOULD OCCUR IN VERTICALLY CONSTRAINED AREAS. RAISE THE CURB LINES ENOUGH TO ALLOW COMPLIANT RAMPS OR AS MUCH AS POSSIBLE WHILE ADHERING TO THE FOLLOWING CRITERIA:

1) 1.0% MIN. AND 5.0% MAXIMUM CROSS-SLOPE OF THE ROAD
2) 1.0% MIN. FLOW LINE (ON EITHER SIDE OF PEDESTRIAN RAMP) TO MAINTAIN POSITIVE DRAINAGE
3) 5.0% RECOMMENDED MAX. FLOW LINE
4) LONGITUDINAL THROUGH LANE ROADWAY TAPERS SHOULD BE 1" VERTICAL PER 15' HORIZONTAL

NOTES:

① TO ENSURE RAMPS AND LANDINGS ARE PROPERLY CONSTRUCTED, ALL INITIAL LANDINGS AT A TOP OF A RAMPED SURFACE (RUNNING SLOPE GREATER THAN 2%) SHALL BE FORMED AND PLACED SEPARATELY IN AN INDEPENDENT CONCRETE POUR. FOLLOW SIDEWALK REINFORCEMENT DETAILS ON THIS SHEET FOR ALL SEPARATELY POURED INITIAL LANDINGS.

② DRILL AND GROUT NO. 4 12" LONG REINFORCEMENT BARS AT 36" MAXIMUM CENTER TO CENTER (EPOXY COATED). BARS TO BE ADJUSTED TO MATCH RAMP GRADE.

③ DRILL AND GROUT 2 - NO. 4 X 12" LONG REINFORCEMENT BARS (EPOXY COATED). REINFORCEMENT REQUIRED FOR ALL CONSTRUCTION JOINTS WITHIN RADIUS.

④ THIS OPTIONAL CURB LINE REINFORCEMENT DETAIL SHOULD ONLY BE USED ON BITUMINOUS ROADWAYS WHEN SPECIFIED IN THE PLAN.

⑤ 1/2 IN. PREFORMED JOINT FILLER MATERIAL PER MNDOT SPEC. 3702.

REVISION:

APPROVED: JANUARY 23, 2017

OPERATIONS ENGINEER

MINNESOTA DEPARTMENT OF TRANSPORTATION

REVISED:

STATE DESIGN ENGINEER

APPROVED: 1-23-2017

PEDESTRIAN CURB RAMP DETAILS

STANDARD PLAN 5-297.250 | 6 OF 6

I HEREBY CERTIFY THAT THIS PLAN WAS PREPARED BY ME OR UNDER MY DIRECT SUPERVISION AND THAT I AM A DULY LICENSED PROFESSIONAL ENGINEER UNDER THE LAWS OF THE STATE OF MINNESOTA.

SIGNATURE: Patrick Loomis

PATRICK LOOMIS
TYPE NAME

DATE: 04/15/2018

LIC. NO: 49099

CITY OF DULUTH
ENGINEERING DIVISION
411 W. 1ST ST. STE. 211
DULUTH, MN 55802

1690 – STREET PRESERVATION

CITY PROJECT NO.: 1690

STATE AID PROJECT NO.: NA

DRAWN BY: SCA / DJK

ADA 6.6

SHEET NO. 20 OF 36

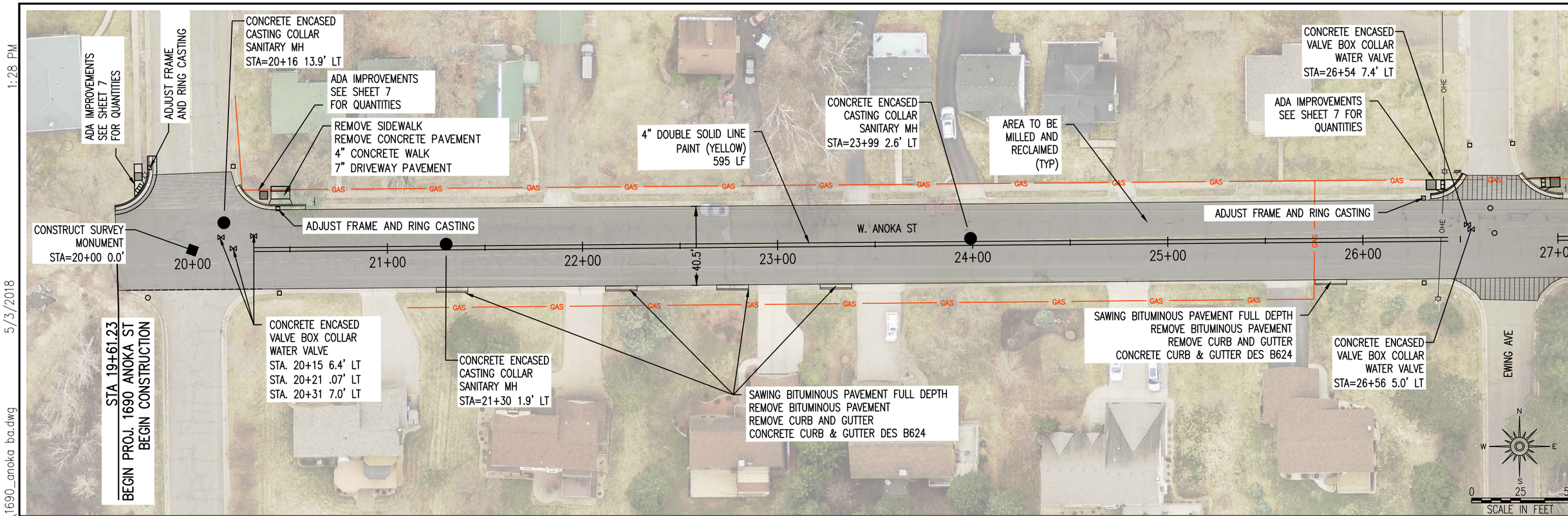

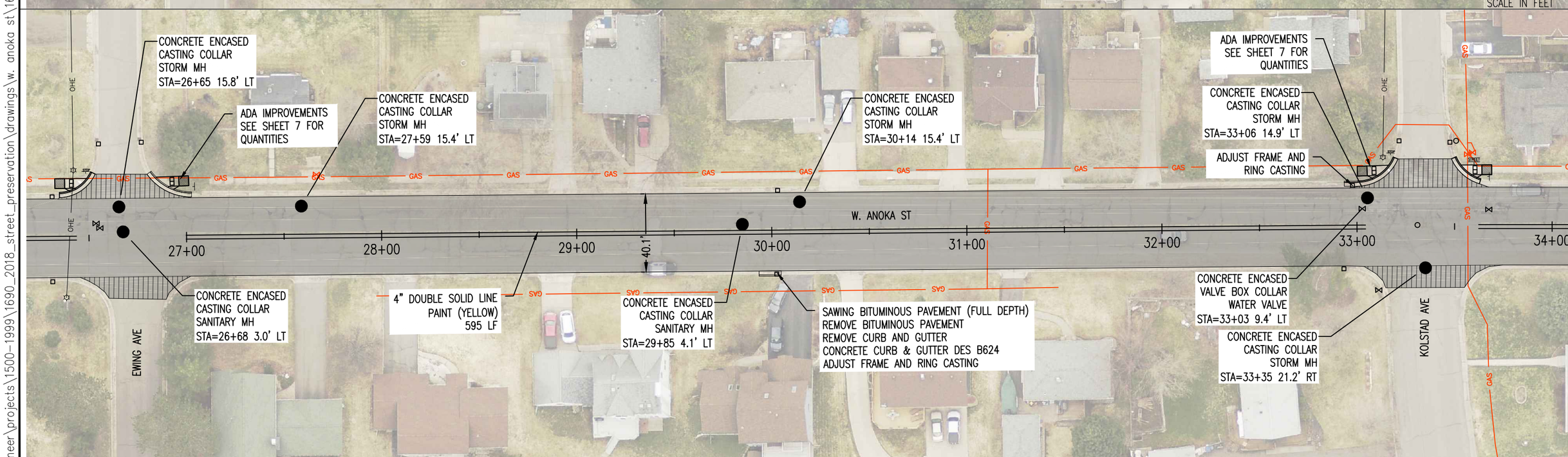

I HEREBY CERTIFY THAT THIS PLAN WAS PREPARED BY ME OR UNDER MY DIRECT SUPERVISION AND THAT I AM A DULY LICENSED PROFESSIONAL ENGINEER UNDER THE LAWS OF THE STATE OF MINNESOTA.

SIGNATURE: Patrick Loomis

PATRICK LOOMIS
TYPE NAME

DATE: 04/15/2018

LIC. NO: 49099

CITY OF DULUTH
ENGINEERING DIVISION
411 W. 1ST ST. STE. 211
DULUTH, MN 55802

CONSTRUCTON PLAN

CITY PROJECT NO.: 1690

STATE AID PROJECT NO.: NA

DRAWN BY: SCA / DJK

PLAN – ANOKA ST.

SHEET NO. 21 OF 36

i:\pwu\engineer\projects\1500-1999\1690_2018_street_preservation\drawings\w. anoka st\1690_anoka ba.dwg 5/3/2018 1:28 PM

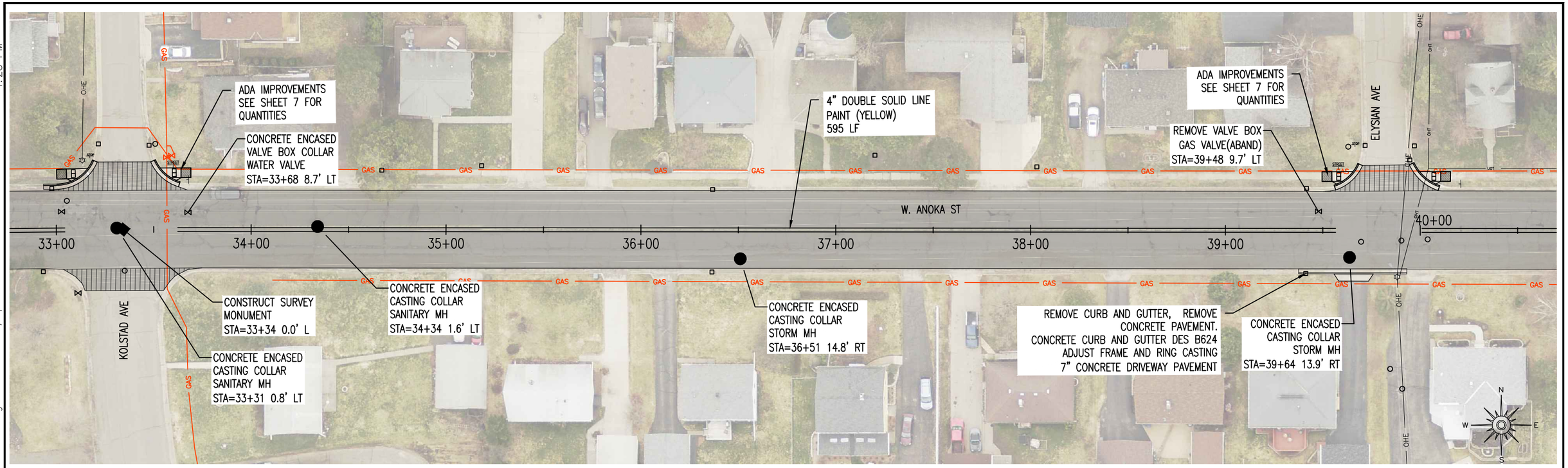

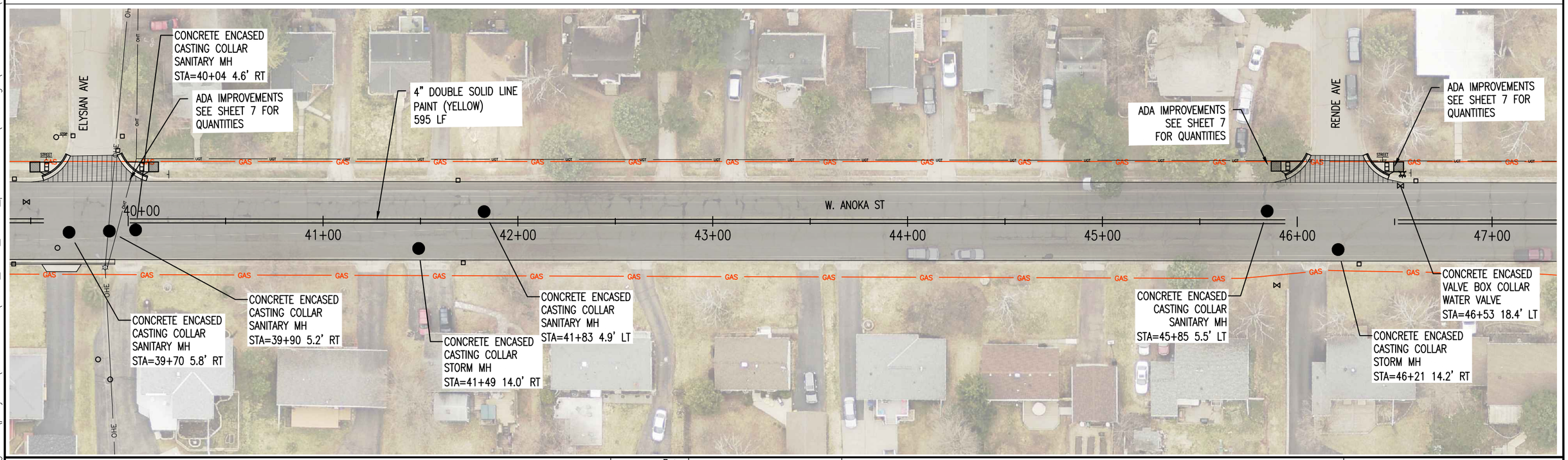

I HEREBY CERTIFY THAT THIS PLAN WAS PREPARED BY ME OR UNDER MY DIRECT SUPERVISION AND THAT I AM A DULY LICENSED PROFESSIONAL ENGINEER UNDER THE LAWS OF THE STATE OF MINNESOTA.

SIGNATURE: Patrick Loomis

PATRICK LOOMIS
TYPE NAME

DATE: 04/15/2018

LIC. NO: 49099

DULUTH

CITY OF DULUTH
ENGINEERING DIVISION
411 W. 1ST ST. STE. 211
DULUTH, MN 55802

CONSTRUCTON PLAN

CITY PROJECT NO.: 1690

STATE AID PROJECT NO.: NA

DRAWN BY: SCA / DJK

PLAN – ANOKA ST.

SHEET NO. 22 OF 36

i:\pwu\engineer\projects\1500-1999\1690_2018_street_preservation\drawings\w. anoka st\1690_anoka ba.dwg 5/3/2018 1:28 PM

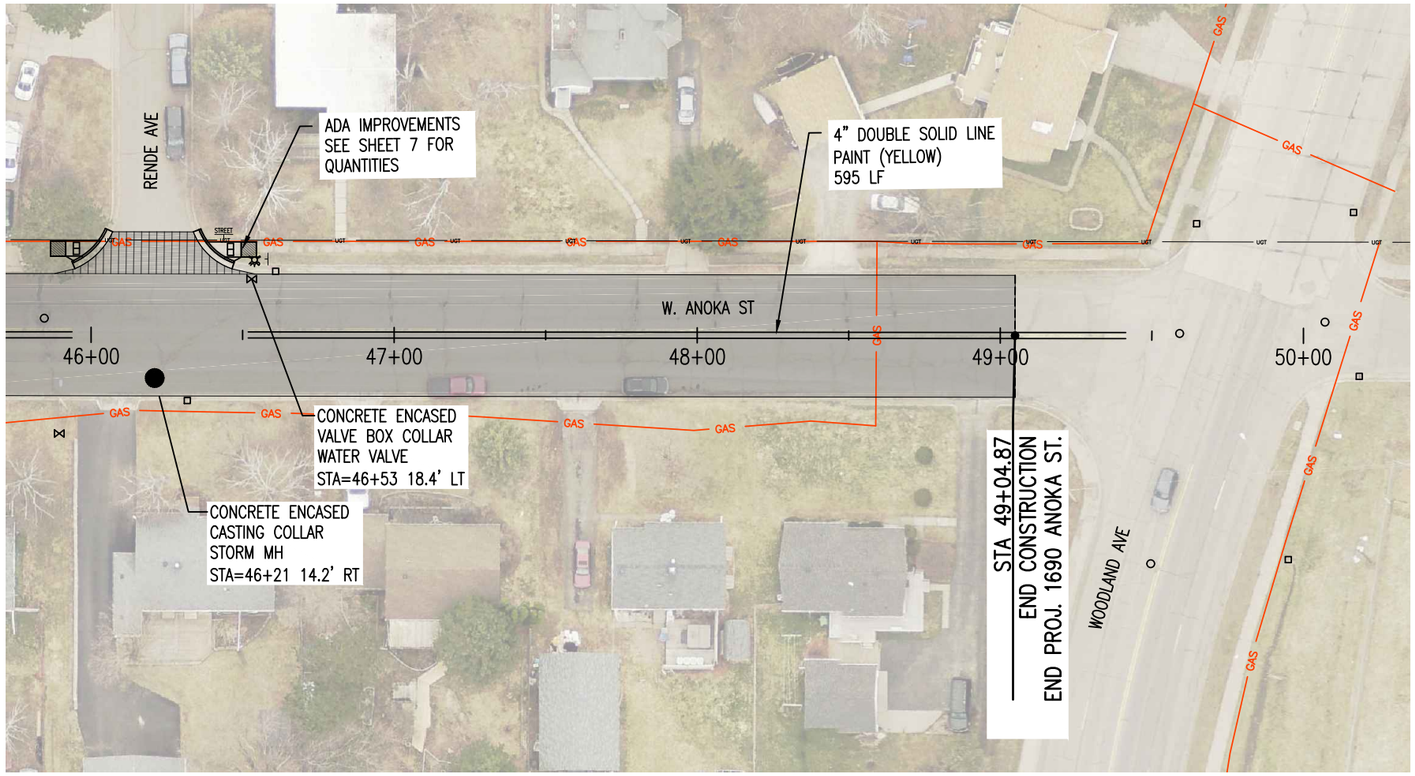

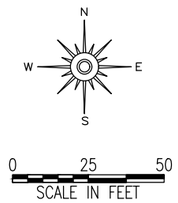

I HEREBY CERTIFY THAT THIS PLAN WAS PREPARED BY ME OR UNDER MY DIRECT SUPERVISION AND THAT I AM A DULY LICENSED PROFESSIONAL ENGINEER UNDER THE LAWS OF THE STATE OF MINNESOTA.

SIGNATURE: Patrick Loomis

PATRICK LOOMIS
TYPE NAME

DATE: 04/15/2018

LIC. NO: 49099

CITY OF DULUTH
ENGINEERING DIVISION
411 W. 1ST ST. STE. 211
DULUTH, MN 55802

CONSTRUCTON PLAN

CITY PROJECT NO.: 1690

STATE AID PROJECT NO.: NA

DRAWN BY: SCA / DJK

PLAN – ANOKA ST.

SHEET NO. 23 OF 36

i:\pwu\engineer\projects\1500-1999\1690_2018_street_preservation\drawings\w. anoka st\1690_anoka ba.dwg 5/3/2018 1:28 PM

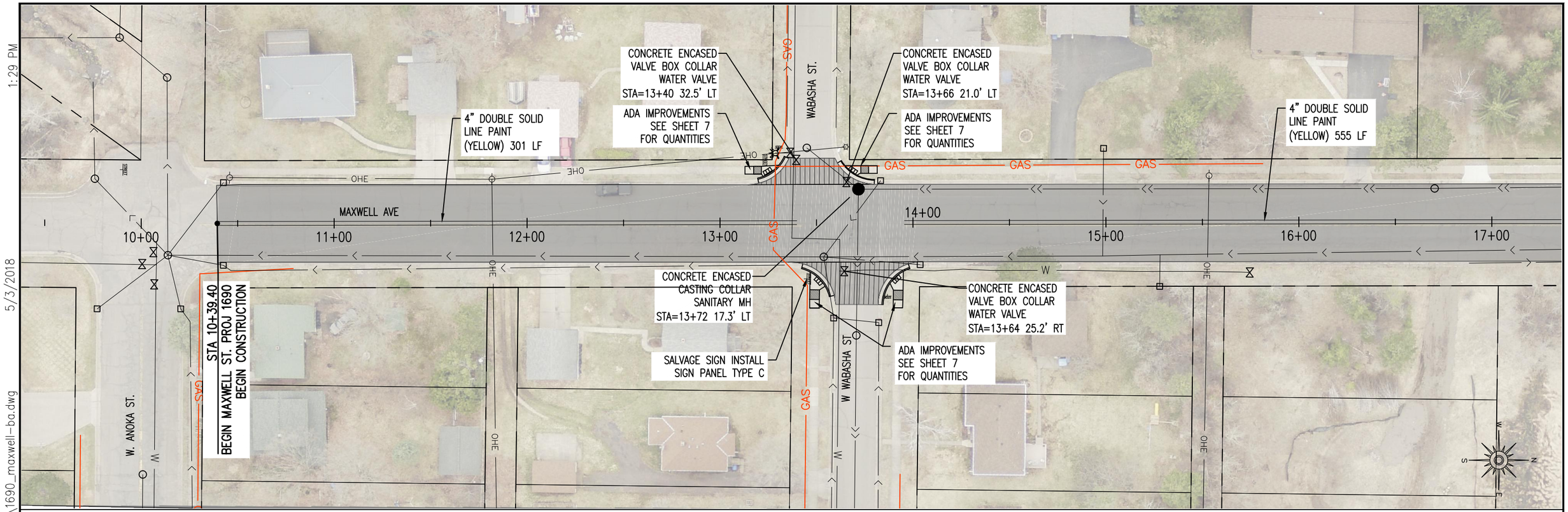

I HEREBY CERTIFY THAT THIS PLAN WAS PREPARED BY ME OR UNDER MY DIRECT SUPERVISION AND THAT I AM A DULY LICENSED PROFESSIONAL ENGINEER UNDER THE LAWS OF THE STATE OF MINNESOTA.

SIGNATURE: Patrick Loomis

PATRICK LOOMIS
TYPE NAME

DATE: 04/15/2018

LIC. NO: 49099

DULUTH MINNESOTA

CITY OF DULUTH
ENGINEERING DIVISION
411 W. 1ST ST. STE. 211
DULUTH, MN 55802

CONSTRUCTON PLAN

CITY PROJECT NO.: 1690

STATE AID PROJECT NO.: NA

DRAWN BY: SCA / DJK

PLAN – MAXWELL AVE.

SHEET NO. 24 OF 36

i:\pwu\engineer\projects\1500-1999\1690_2018_street_preservation\drawings\maxwell ave\1690_maxwell-ba.dwg 5/3/2018 1:29 PM

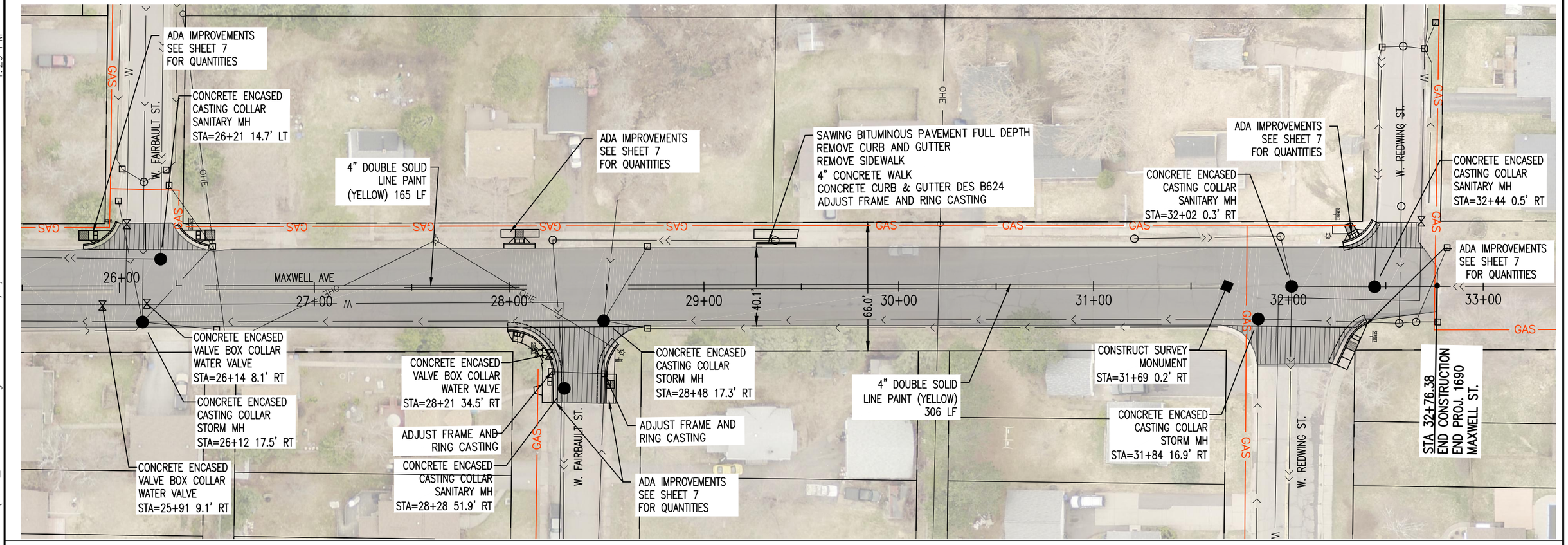

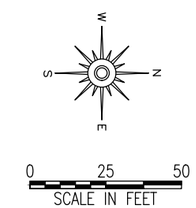

I HEREBY CERTIFY THAT THIS PLAN WAS PREPARED BY ME OR UNDER MY DIRECT SUPERVISION AND THAT I AM A DULY LICENSED PROFESSIONAL ENGINEER UNDER THE LAWS OF THE STATE OF MINNESOTA.

SIGNATURE: Patrick Loomis

PATRICK LOOMIS
TYPE NAME

DATE: 04/15/2018

LIC. NO: 49099

THE CITY OF DULUTH MINNESOTA

CITY OF DULUTH
ENGINEERING DIVISION
411 W. 1ST ST. STE. 211
DULUTH, MN 55802

CONSTRUCTON PLAN

CITY PROJECT NO.: 1690

STATE AID PROJECT NO.: NA

DRAWN BY: SCA / DJK

PLAN – MAXWELL AVE.

SHEET NO. 25 OF 36

i:\pwu\engineer\projects\1500-1999\1690_2018_street_preservation\drawings\maxwell ave\1690_maxwell-ba.dwg 5/3/2018 1:29 PM

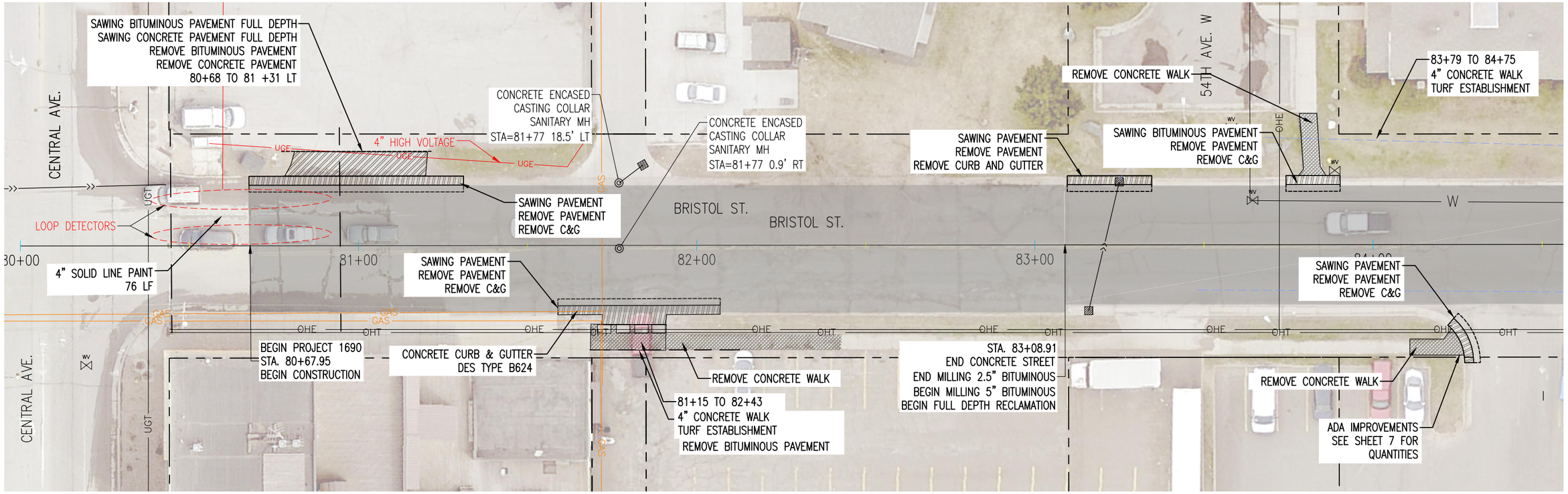

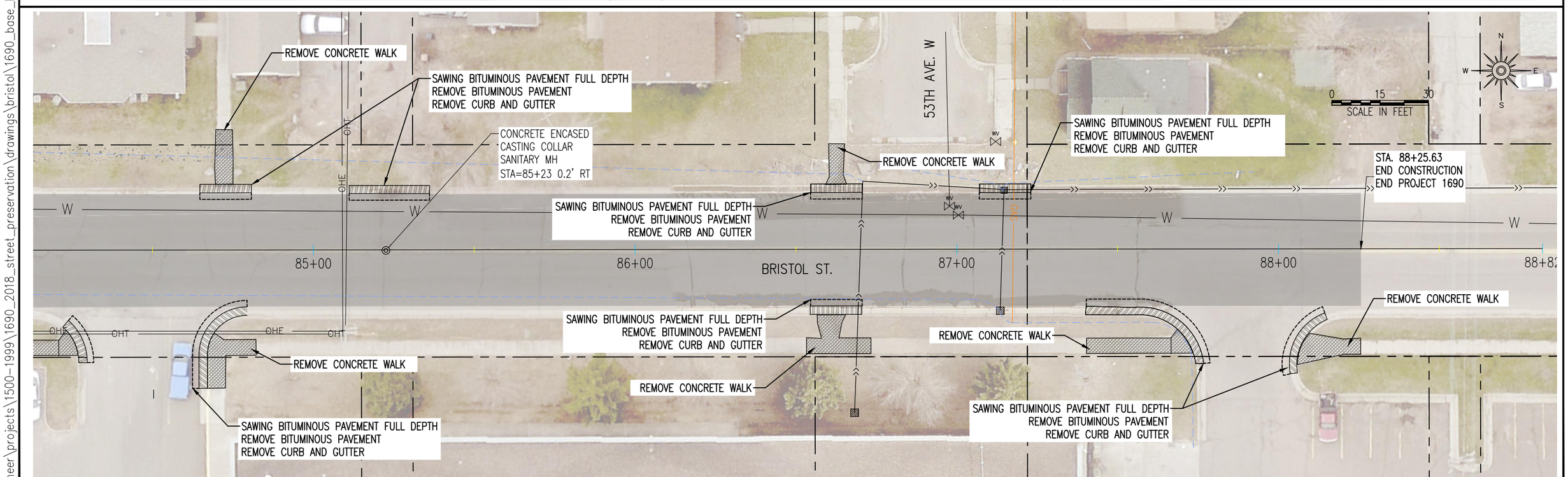

I HEREBY CERTIFY THAT THIS PLAN WAS PREPARED BY ME OR UNDER MY DIRECT SUPERVISION AND THAT I AM A DULY LICENSED PROFESSIONAL ENGINEER UNDER THE LAWS OF THE STATE OF MINNESOTA.

SIGNATURE: Patrick Loomis

PATRICK LOOMIS
TYPE NAME

DATE: 04/15/2018

LIC. NO: 49099

DULUTH

CITY OF DULUTH
ENGINEERING DIVISION
411 W. 1ST ST. STE. 211
DULUTH, MN 55802

2018 STREET PRESERVATION PROJECT

CITY PROJECT NO.: 1690

STATE AID PROJECT NO.: NA

DRAWN BY: SCA / DJK

PLAN – REMOVAL BRISTOL ST.

SHEET NO. 26 OF 36

5/3/2018 11:47 AM

i:\pwu\engineer\projects\1500-1999\1690_2018_street_preservation\drawings\bristol\1690_base_b.dwg

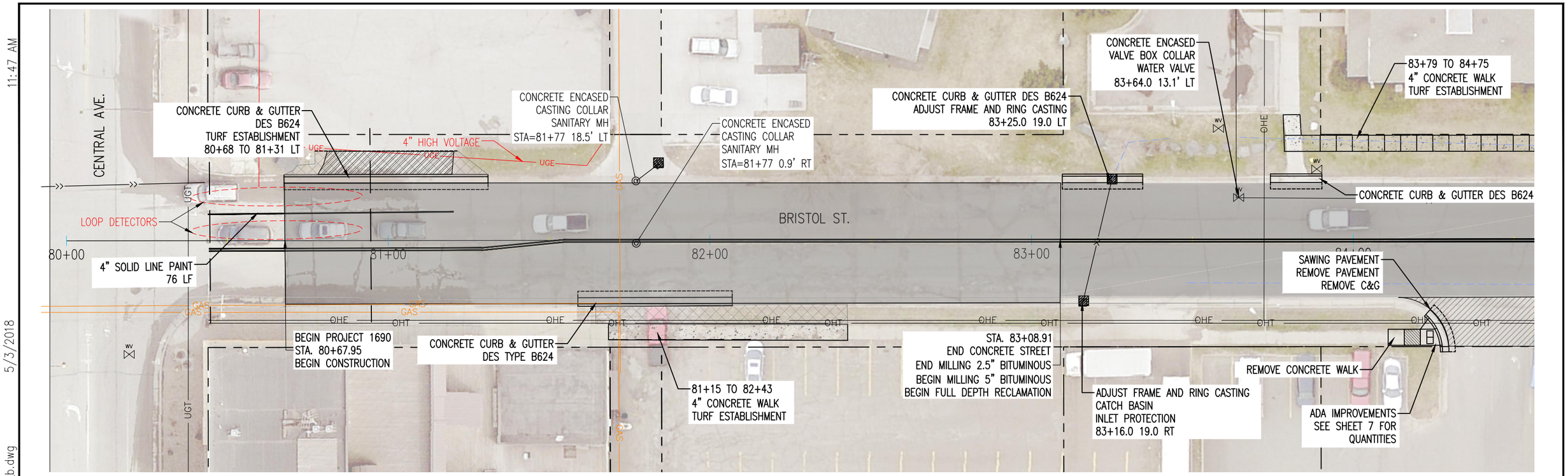

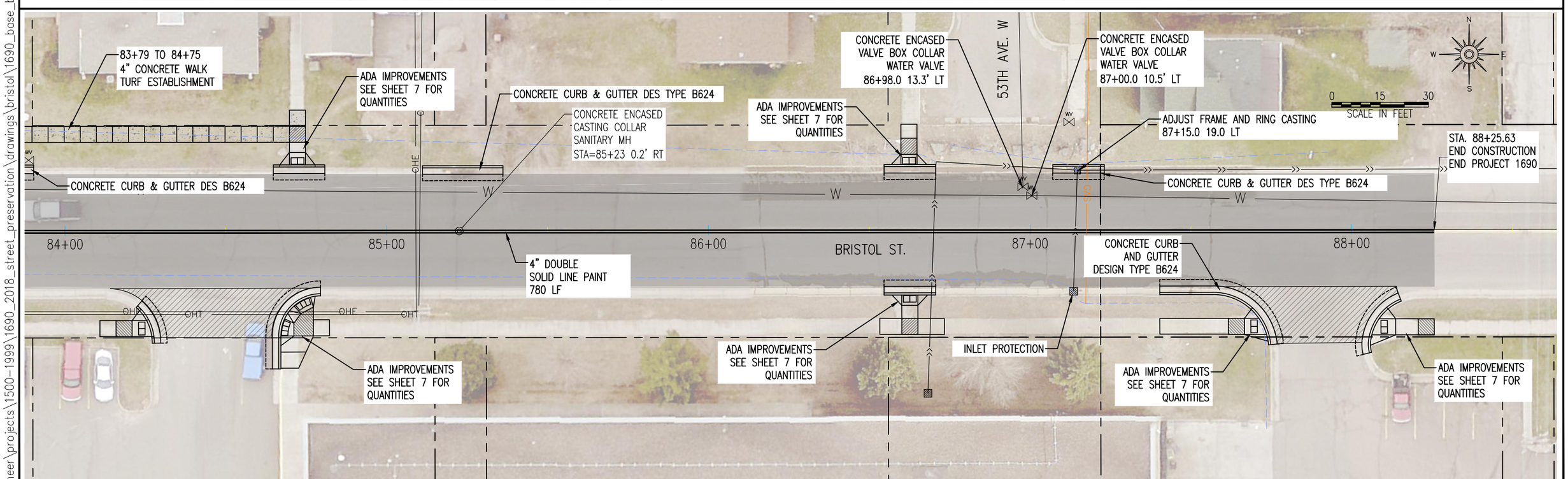

I HEREBY CERTIFY THAT THIS PLAN WAS PREPARED BY ME OR UNDER MY DIRECT SUPERVISION AND THAT I AM A DULY LICENSED PROFESSIONAL ENGINEER UNDER THE LAWS OF THE STATE OF MINNESOTA.

SIGNATURE: Patrick Loomis

PATRICK LOOMIS
TYPE NAME

DATE: 04/15/2018

LIC. NO: 49099

DULUTH

CITY OF DULUTH
ENGINEERING DIVISION
411 W. 1ST ST. STE. 211
DULUTH, MN 55802

2018 STREET PRESERVATION PROJECT

CITY PROJECT NO.: 1690

STATE AID PROJECT NO.: NA

DRAWN BY: SCA / DJK

PLAN – BRISTOL ST.

SHEET NO. 27 OF 36

5/3/2018 11:47 AM

i:\pwu\engineer\projects\1500-1999\1690_2018_street_preservation\drawings\bristol\1690_base_b.dwg

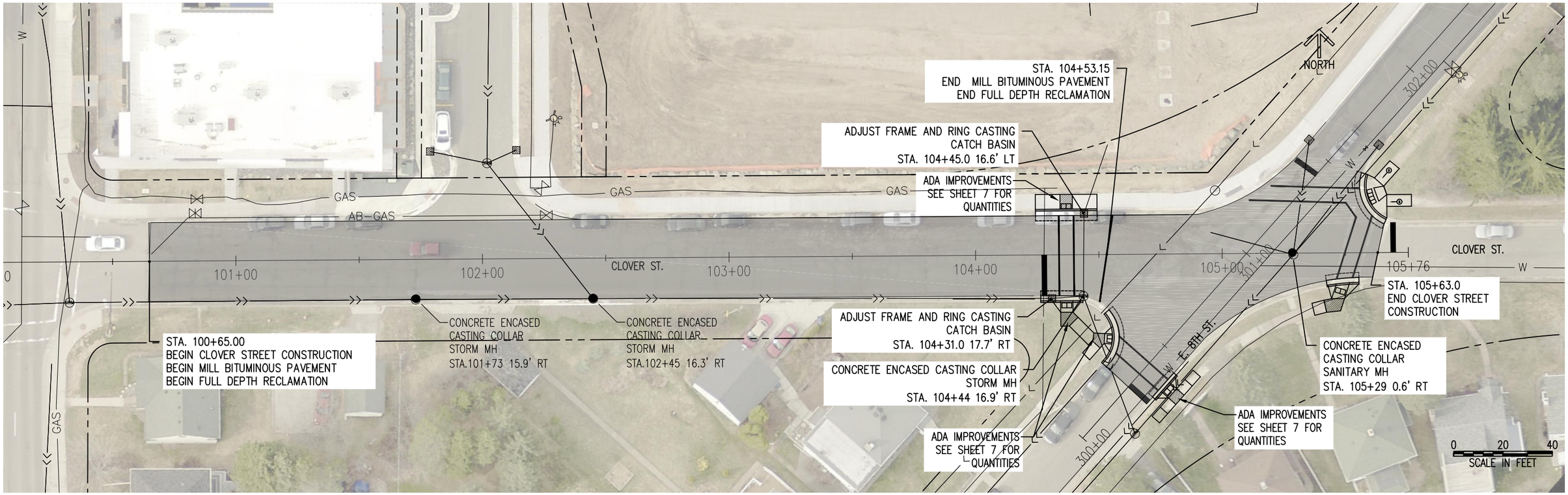

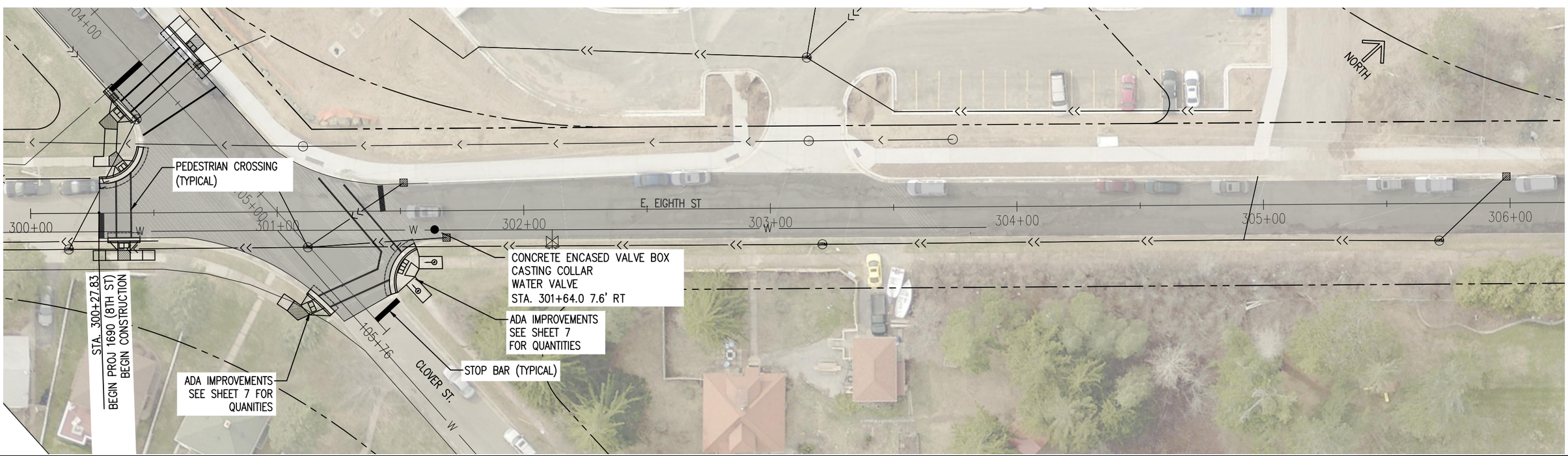

I HEREBY CERTIFY THAT THIS PLAN WAS PREPARED BY ME OR UNDER MY DIRECT SUPERVISION AND THAT I AM A DULY LICENSED PROFESSIONAL ENGINEER UNDER THE LAWS OF THE STATE OF MINNESOTA.

SIGNATURE: Patrick Loomis

PATRICK LOOMIS
TYPE NAME

DATE: 04/15/2018

LIC. NO: 49099

CITY OF DULUTH
ENGINEERING DIVISION
411 W. 1ST ST. STE. 211
DULUTH, MN 55802

2018 STREET PRESERVATION PROJECT

CITY PROJECT NO.: 1690

STATE AID PROJECT NO.: NA

DRAWN BY: SCA / DJK

CLOVER ST. & E. 8TH PLAN

SHEET NO. 28 OF 36

i:\pwu\engineer\projects\1500-1999\1690_2018_street_preservation\drawings\clover_ e. eighth\1690_plan.dwg 5/2/2018 2:22 PM

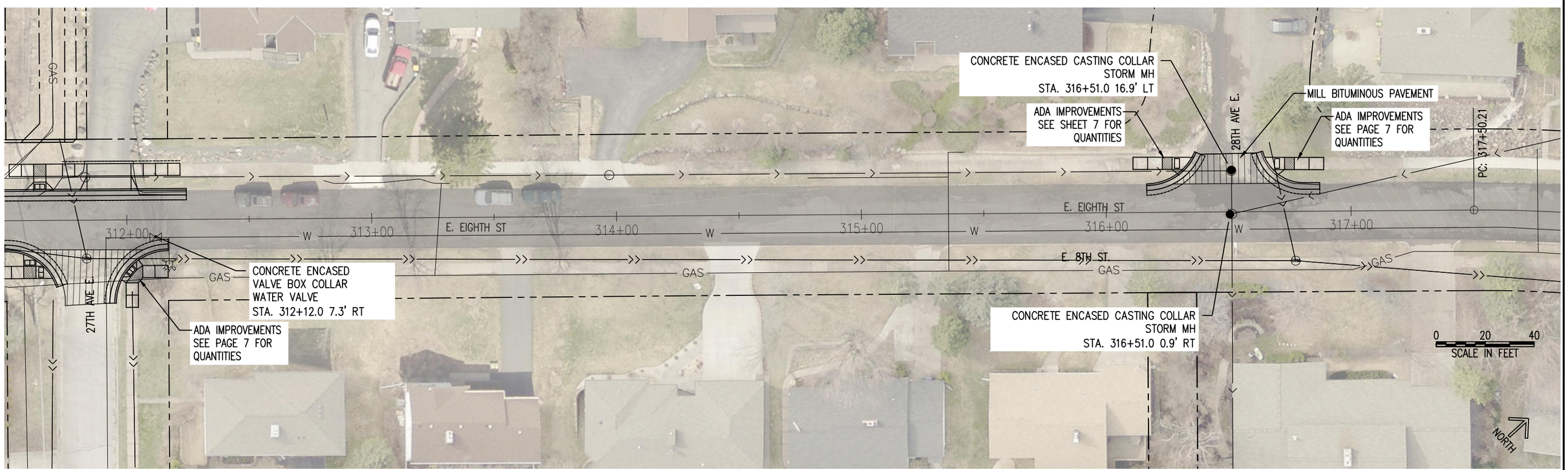

I HEREBY CERTIFY THAT THIS PLAN WAS PREPARED BY ME OR UNDER MY DIRECT SUPERVISION AND THAT I AM A DULY LICENSED PROFESSIONAL ENGINEER UNDER THE LAWS OF THE STATE OF MINNESOTA.

SIGNATURE: Patrick Loomis

PATRICK LOOMIS
TYPE NAME

DATE: 04/15/2018

LIC. NO: 49099

CITY OF DULUTH
ENGINEERING DIVISION
411 W. 1ST ST. STE. 211
DULUTH, MN 55802

2018 STREET PRESERVATION PROJECT

CITY PROJECT NO.: 1690

STATE AID PROJECT NO.: NA

DRAWN BY: SCA / DJK

PLAN – CLOVER ST. & E. EIGHTH ST.

SHEET NO. 29 OF 36

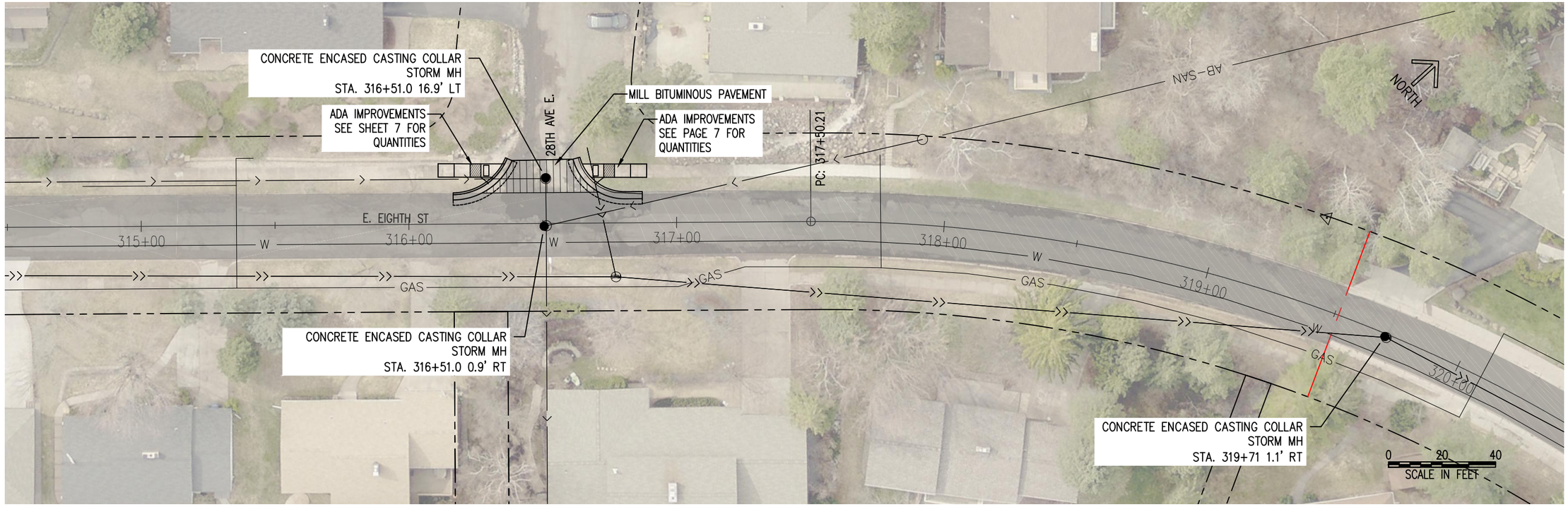

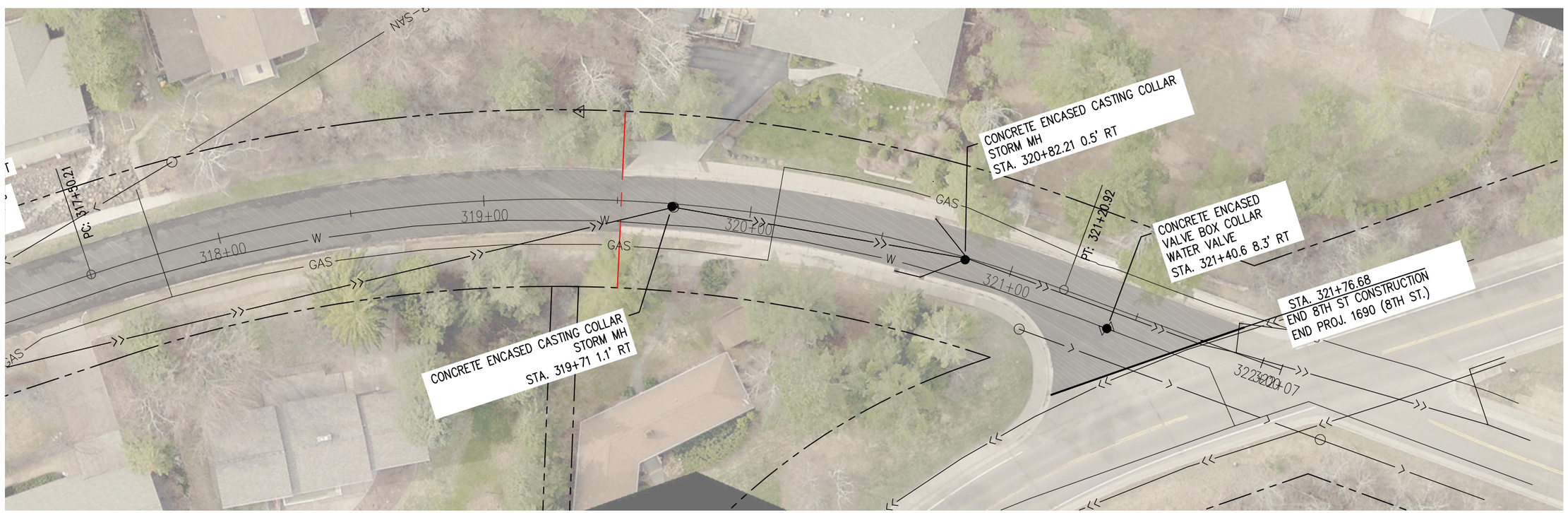

I HEREBY CERTIFY THAT THIS PLAN WAS PREPARED BY ME OR UNDER MY DIRECT SUPERVISION AND THAT I AM A DULY LICENSED PROFESSIONAL ENGINEER UNDER THE LAWS OF THE STATE OF MINNESOTA.

SIGNATURE: Patrick Loomis

PATRICK LOOMIS
TYPE NAME

DATE: 04/15/2018

LIC. NO: 49099

THE CITY OF DULUTH

CITY OF DULUTH
ENGINEERING DIVISION
411 W. 1ST ST. STE. 211
DULUTH, MN 55802

2018 STREET PRESERVATION PROJECT

CITY PROJECT NO.: 1690

STATE AID PROJECT NO.: NA

DRAWN BY: SCA / DJK

PLAN – CLOVER ST. & E. EIGHTH ST.

SHEET NO. 29 OF 36

i:\pwu\engineer\projects\1500-1999\1690_2018_street_preservation\drawings\clover_ e. eighth\1690_plan.dwg 5/2/2018 2:22 PM

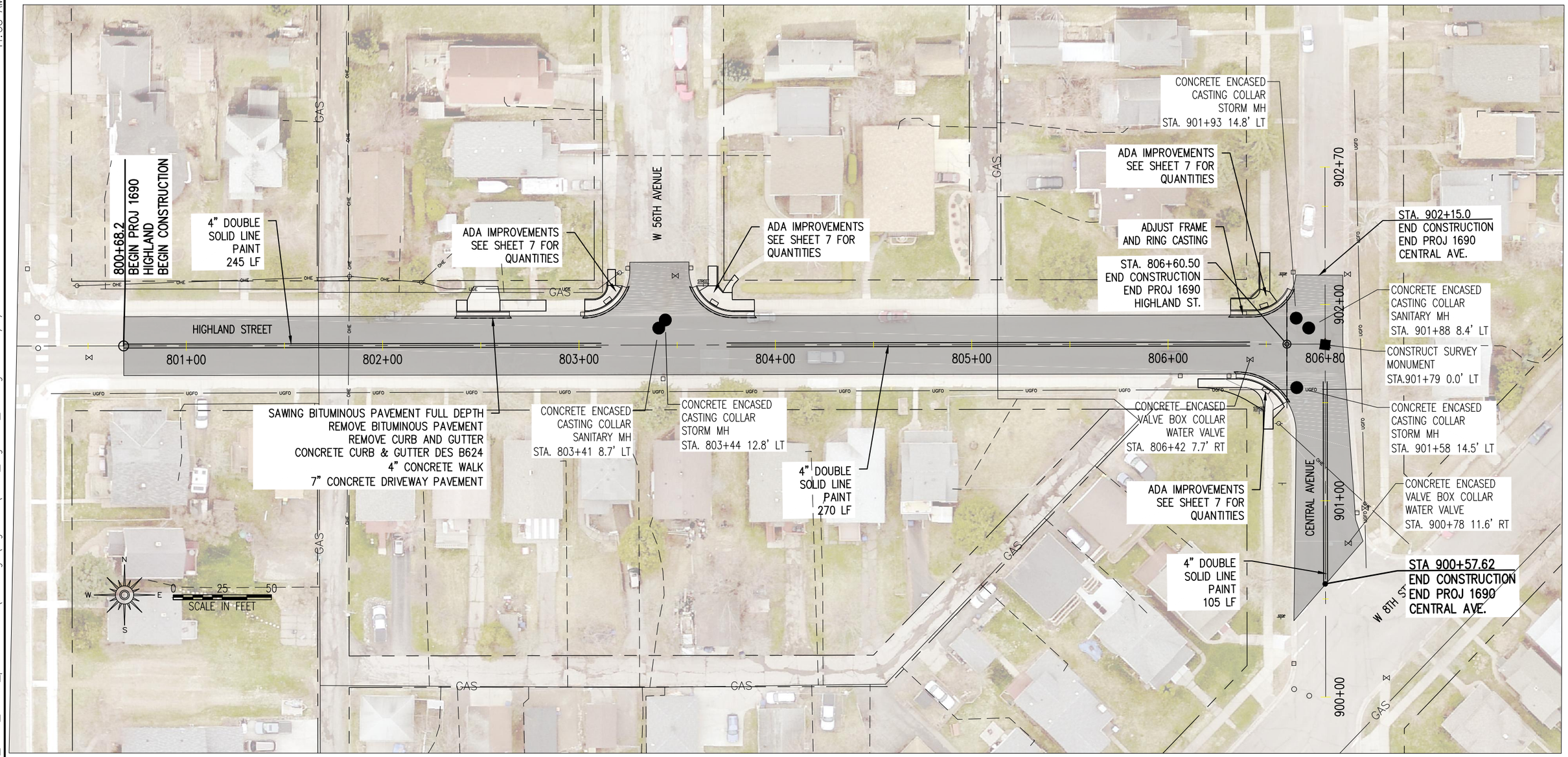

I HEREBY CERTIFY THAT THIS PLAN WAS PREPARED BY ME OR UNDER MY DIRECT SUPERVISION AND THAT I AM A DULY LICENSED PROFESSIONAL ENGINEER UNDER THE LAWS OF THE STATE OF MINNESOTA.

SIGNATURE: Patrick Loomis

PATRICK LOOMIS
TYPE NAME

DATE: 04/15/2018

LIC. NO: 49099

THE CITY OF DULUTH

CITY OF DULUTH
ENGINEERING DIVISION
411 W. 1ST ST. STE. 211
DULUTH, MN 55802

CONSTRUCTON PLAN

CITY PROJECT NO.: 1690

STATE AID PROJECT NO.: NA

DRAWN BY: SCA / DJK

PLAN – HIGHLAND ST.

SHEET NO. 31 OF 36

i:\pwu\engineer\projects\1500-1999\1690_2018_street_preservation\drawings\highland\1690_highland_ba.dwg 5/3/2018 11:38 AM

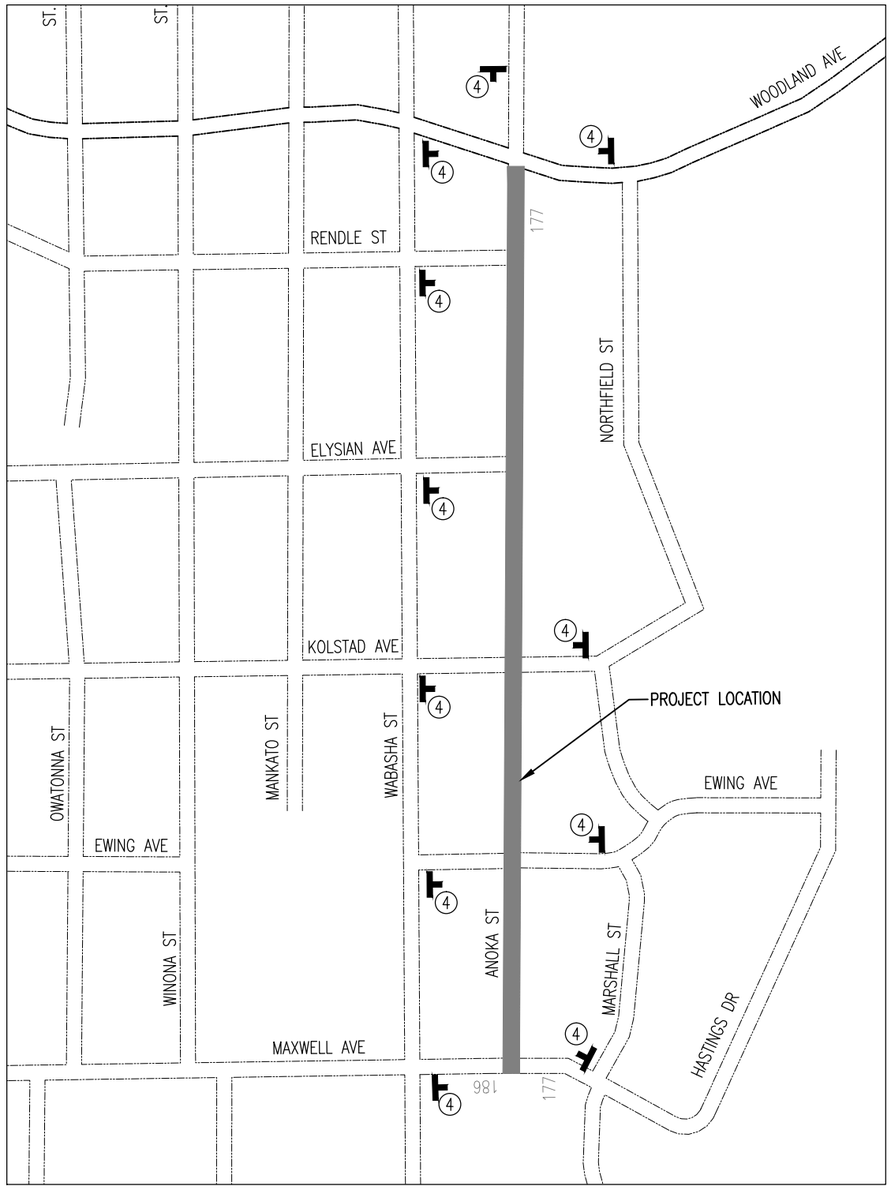

TRAFFIC SIGN LEGEND

NOTE	SIGN	QNTY
1	ONE LANE ROAD AHEAD 48" X 48" W20-4	7
2	48" X 48" W20-7a	
3	BE PREPARED TO STOP 48" X 48" W20-X5	
4	ROAD WORK AHEAD 48" X 48" W21-4	
5	END ROAD WORK G20-2A 48" X 24"	
	TYPE "A" FLASHER	
	SIGN	

TRAFFIC CONTROL NOTES

1. THE CONTRACTOR SHALL FURNISH, INSTALL AND MAINTAIN THE DEVICES IN THIS TRAFFIC CONTROL PLAN UNLESS OTHERWISE NOTED.
2. ALL TRAFFIC CONTROL DEVICES SHALL CONFORM TO THE MINNESOTA MANUAL ON UNIFORM TRAFFIC CONTROL DEVICES (MMUTCD) INCLUDING " "TEMPORARY TRAFFIC CONTROL ZONE LAYOUTS" DATED JANUARY 2018. AVAILABLE AT: (http://www.dot.state.mn.us/trafficeng/publ/fieldmanual/index.html)
3. FIELD CONDITIONS MAY REQUIRE MODIFICATIONS OF THIS LAYOUT AS DEEMED NECESSARY BY THE ENGINEER.
4. THE NUMBER AND PLACEMENT OF TRAFFIC CONTROL DEVICES WILL DEPEND UPON THE SEQUENCE OF THE CONTRACTOR'S OPERATION.
5. ANY DISTANCES DEPICTED ARE APPROXIMATE.
6. THE CONTRACTOR IS RESPONSIBLE FOR PROTECTING ANY WORK AREAS NEAR TRAFFIC IN ACCORDANCE WITH THE MMUTCD.
7. IF THE CONTRACTOR DECIDES TO PERFORM THE CONSTRUCTION WORK IN A SEQUENCE OTHER THAN SHOWN IN THIS TRAFFIC CONTROL PLAN, THE CONTRACTOR SHALL PROVIDE COMPLETE REVISED TRAFFIC CONTROL PLANS TO BE APPROVED BY THE ENGINEER.
8. ALL TRAFFIC CONTROL DEVICES, INCLUDING OVERHEAD SIGNS ON ROADS OPEN TO TRAFFIC THAT ARE NOT CONSISTENT WITH TRAFFIC OPERATION, SHALL BE COVERED, REMOVED OR REVISED AS DIRECTED BY THE ENGINEER.
9. "ROAD WORK AHEAD" SIGNS SHALL BE MOUNTED APPROX. 300 FT (1 BLOCK) IN ADVANCE OF THE CONSTRUCTION AND SHALL HAVE A TYPE "A" LOW INTENSITY FLASHING AMBER WARNING LIGHT MOUNTED ON THEM.
10. "ROAD CLOSED AHEAD" SIGNS SHALL BE ERECTED APPROX. 300 FT (1 BLOCK) IN ADVANCE OF THE CLOSURE.
11. TYPE "A" LOW INTENSITY AMBER WARNING LIGHTS SHALL BE MOUNTED ON ALL ADVANCE WARNING SIGNS AND ON ALL TYPE I AND TYPE III BARRICADES WHEN USED AT NIGHT OR TO IDENTIFY HAZARDS.
12. ADDITIONAL SIGNING MAY BE REQUIRED FOR SEPARATE LANE CLOSURES. THE SIGNING SHALL BE IN CONFORMANCE WITH "TEMPORARY TRAFFIC CONTROL ZONE LAYOUTS" FIELD MANUAL DATED JANUARY 2014 AND SHALL BE CONSIDERED INCIDENTAL.
13. THE CONTRACTOR SHALL PLACE DRUMS THROUGHOUT THE PROJECT TO DELINEATE HAZARDOUS AREAS AND FACILITATE DAY-TO-DAY CHANNELIZATION OF TRAFFIC (INCIDENTAL).

SIGNAGE ESTIMATED QUANTITIES

ITEM	DESIGN	NO.	REMARKS
ROAD WORK AHEAD	W20-1	11	48"x 48" DOUBLE POST MOUNTED WITH FLASHER
FLASHING AMBER WARNING LIGHTS	LOW INTENSITY	11	AS REQUIRED
TYPE B CHANNELIZING DEVICE	DRUM	60	LANE SEPERATION

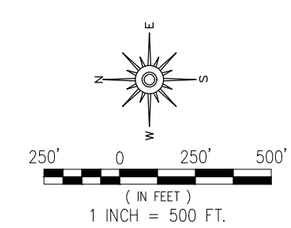

PROPOSED CONSTRUCTION AREA

I HEREBY CERTIFY THAT THIS PLAN WAS PREPARED BY ME OR UNDER MY DIRECT SUPERVISION AND THAT I AM A DULY LICENSED PROFESSIONAL ENGINEER UNDER THE LAWS OF THE STATE OF MINNESOTA.

SIGNATURE: Patrick Loomis

PATRICK LOOMIS
TYPE NAME

DATE: 04/15/2018

LIC. NO: 49099

DULUTH MINNESOTA

CITY OF DULUTH
ENGINEERING DIVISION
411 W. 1ST ST. STE. 211
DULUTH, MN 55802

TRAFFIC CONTROL

CITY PROJECT NO.: 1690

STATE AID PROJECT NO.: NA

DRAWN BY: SCA / DJK

TRAFFIC CONTROL - ANOKA ST.

SHEET NO. 32 OF 36

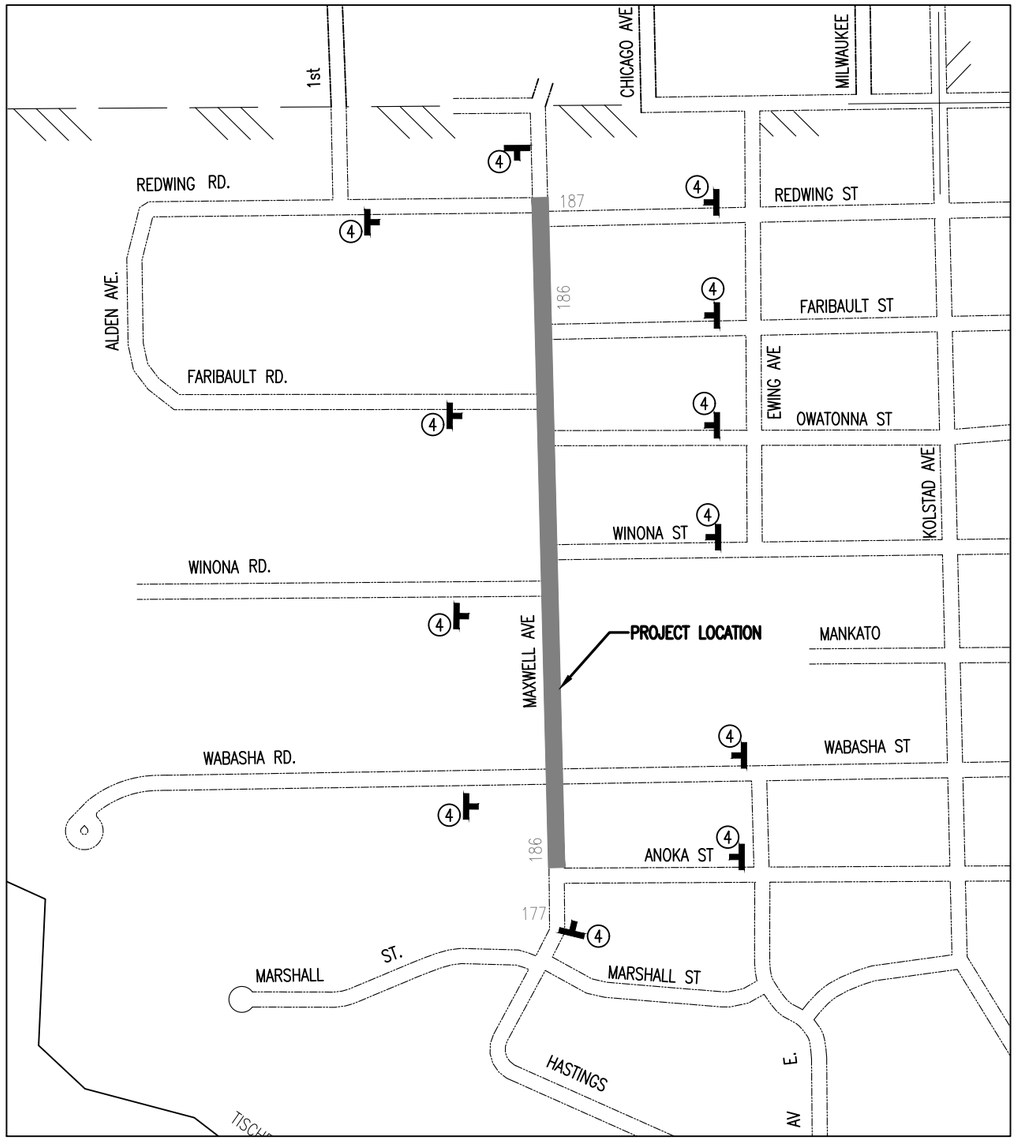

TRAFFIC SIGN LEGEND

NOTE	SIGN	QNTY
1	ONE LANE ROAD AHEAD 48" X 48" W20-4	7
2	48" X 48" W20-7a	
3	BE PREPARED TO STOP 48" X 48" W20-X5	
4	ROAD WORK AHEAD 48" X 48" W21-4	
5	END ROAD WORK G20-2A 48" X 24"	
	TYPE "A" FLASHER	
	SIGN	

TRAFFIC CONTROL NOTES

1. THE CONTRACTOR SHALL FURNISH, INSTALL AND MAINTAIN THE DEVICES IN THIS TRAFFIC CONTROL PLAN UNLESS OTHERWISE NOTED.
2. ALL TRAFFIC CONTROL DEVICES SHALL CONFORM TO THE MINNESOTA MANUAL ON UNIFORM TRAFFIC CONTROL DEVICES (MMUTCD) INCLUDING " "TEMPORARY TRAFFIC CONTROL ZONE LAYOUTS" DATED JANUARY 2018. AVAILABLE AT: (http://www.dot.state.mn.us/trafficeng/publ/fieldmanual/index.html)
3. FIELD CONDITIONS MAY REQUIRE MODIFICATIONS OF THIS LAYOUT AS DEEMED NECESSARY BY THE ENGINEER.
4. THE NUMBER AND PLACEMENT OF TRAFFIC CONTROL DEVICES WILL DEPEND UPON THE SEQUENCE OF THE CONTRACTOR'S OPERATION.
5. ANY DISTANCES DEPICTED ARE APPROXIMATE.
6. THE CONTRACTOR IS RESPONSIBLE FOR PROTECTING ANY WORK AREAS NEAR TRAFFIC IN ACCORDANCE WITH THE MMUTCD.
7. IF THE CONTRACTOR DECIDES TO PERFORM THE CONSTRUCTION WORK IN A SEQUENCE OTHER THAN SHOWN IN THIS TRAFFIC CONTROL PLAN, THE CONTRACTOR SHALL PROVIDE COMPLETE REVISED TRAFFIC CONTROL PLANS TO BE APPROVED BY THE ENGINEER.
8. ALL TRAFFIC CONTROL DEVICES, INCLUDING OVERHEAD SIGNS ON ROADS OPEN TO TRAFFIC THAT ARE NOT CONSISTENT WITH TRAFFIC OPERATION, SHALL BE COVERED, REMOVED OR REVISED AS DIRECTED BY THE ENGINEER.
9. "ROAD WORK AHEAD" SIGNS SHALL BE MOUNTED APPROX. 300 FT (1 BLOCK) IN ADVANCE OF THE CONSTRUCTION AND SHALL HAVE A TYPE "A" LOW INTENSITY FLASHING AMBER WARNING LIGHT MOUNTED ON THEM.
10. "ROAD CLOSED AHEAD" SIGNS SHALL BE ERECTED APPROX. 300 FT (1 BLOCK) IN ADVANCE OF THE CLOSURE.
11. TYPE "A" LOW INTENSITY AMBER WARNING LIGHTS SHALL BE MOUNTED ON ALL ADVANCE WARNING SIGNS AND ON ALL TYPE I AND TYPE III BARRICADES WHEN USED AT NIGHT OR TO IDENTIFY HAZARDS.
12. ADDITIONAL SIGNING MAY BE REQUIRED FOR SEPARATE LANE CLOSURES. THE SIGNING SHALL BE IN CONFORMANCE WITH "TEMPORARY TRAFFIC CONTROL ZONE LAYOUTS" FIELD MANUAL DATED JANUARY 2014 AND SHALL BE CONSIDERED INCIDENTAL.
13. THE CONTRACTOR SHALL PLACE DRUMS THROUGHOUT THE PROJECT TO DELINEATE HAZARDOUS AREAS AND FACILITATE DAY-TO-DAY CHANNELIZATION OF TRAFFIC (INCIDENTAL).

N
W E
S

250' 0 250' 500'
(IN FEET)
1 INCH = 500 FT.

PROPOSED CONSTRUCTION AREA

SIGNAGE ESTIMATED QUANTITIES

ITEM	DESIGN	NO.	REMARKS
ROAD WORK AHEAD	W20-1	12	48"x 48" DOUBLE POST MOUNTED WITH FLASHER
FLASHING AMBER WARNING LIGHTS	LOW INTENSITY	12	AS REQUIRED
TYPE B CHANNELIZING DEVICE	DRUM	45	LANE SEPERATION

I HEREBY CERTIFY THAT THIS PLAN WAS PREPARED BY ME OR UNDER MY DIRECT SUPERVISION AND THAT I AM A DULY LICENSED PROFESSIONAL ENGINEER UNDER THE LAWS OF THE STATE OF MINNESOTA.

SIGNATURE: Patrick Loomis

PATRICK LOOMIS
TYPE NAME

DATE: 04/15/2018

LIC. NO: 49099

CITY OF DULUTH
ENGINEERING DIVISION
411 W. 1ST ST. STE. 211
DULUTH, MN 55802

TRAFFIC CONTROL

CITY PROJECT NO.: 1690 | STATE AID PROJECT NO.: NA

DRAWN BY: SCA / DJK

TRAFFIC CONTROL – MAXWELL AVE.

SHEET NO. 33 OF 36

i:\pwu\engineer\projects\1500-1999\1690_2018_street_preservation\drawings\maxwell ave\1690_traf cntrl maxwell.dwg 5/2/2018 2:03 PM

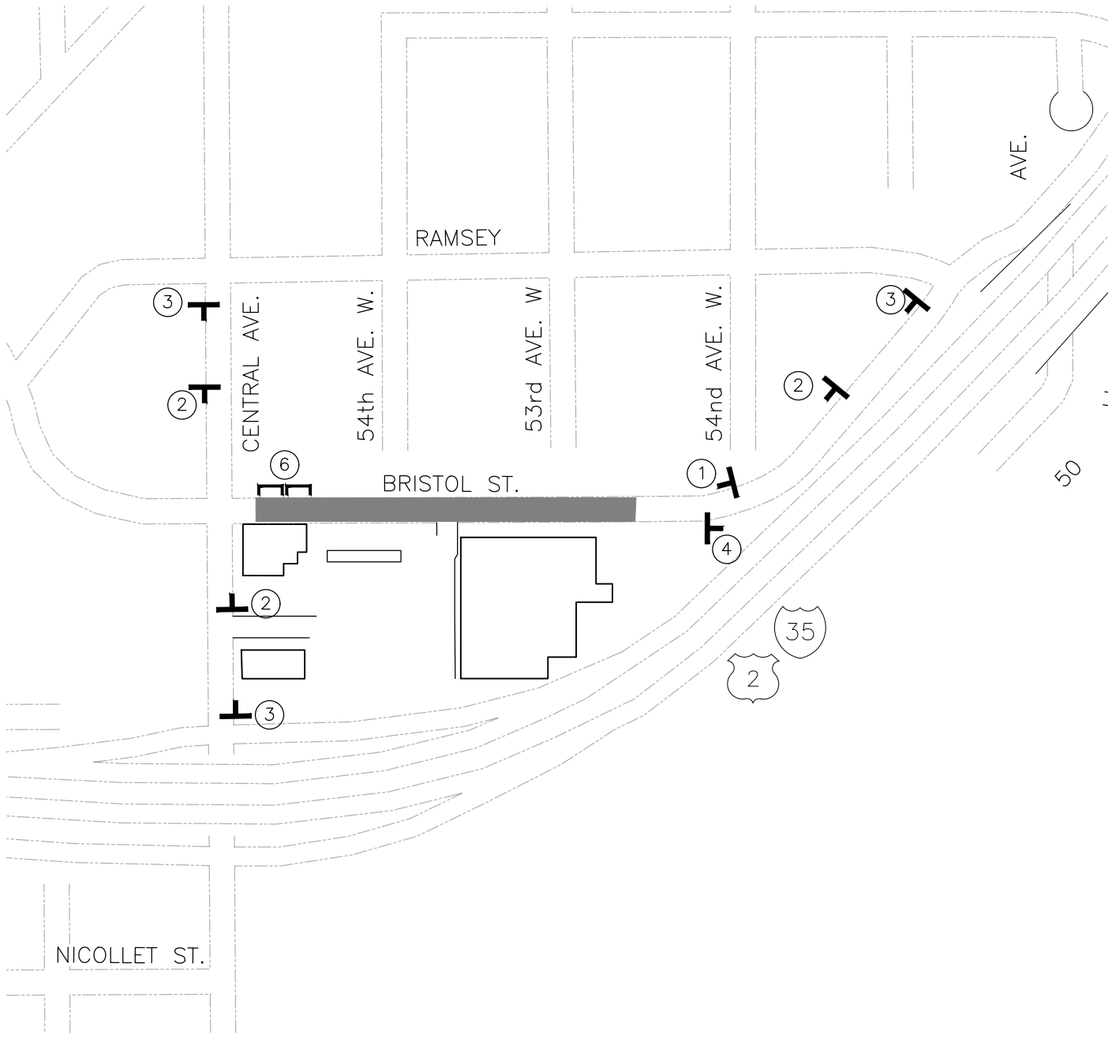

TRAFFIC SIGN LEGEND

DENOTES	SIGN	QNTY
1	ONE LANE ROAD AHEAD 48" X 48" W20-4	7
2	48" X 48" W20-7a	
3	BE PREPARED TO STOP 48" X 48" W20-X5	
4	ROAD WORK AHEAD 48" X 48" W21-4	
5	END ROAD WORK G20-2A 48" X 24"	
	TYPE "A" FLASHER	
	SIGN	

TRAFFIC CONTROL NOTES

1. THE CONTRACTOR SHALL FURNISH, INSTALL AND MAINTAIN THE DEVICES IN THIS TRAFFIC CONTROL PLAN UNLESS OTHERWISE NOTED.
2. ALL TRAFFIC CONTROL DEVICES SHALL CONFORM TO THE MINNESOTA MANUAL ON UNIFORM TRAFFIC CONTROL DEVICES (MMUTCD) INCLUDING " "TEMPORARY TRAFFIC CONTROL ZONE LAYOUTS" DATED JANUARY 2018. AVAILABLE AT: (http://www.dot.state.mn.us/trafficeng/publ/fieldmanual/index.html)
3. FIELD CONDITIONS MAY REQUIRE MODIFICATIONS OF THIS LAYOUT AS DEEMED NECESSARY BY THE ENGINEER.
4. THE NUMBER AND PLACEMENT OF TRAFFIC CONTROL DEVICES WILL DEPEND UPON THE SEQUENCE OF THE CONTRACTOR'S OPERATION.
5. ANY DISTANCES DEPICTED ARE APPROXIMATE.
6. THE CONTRACTOR IS RESPONSIBLE FOR PROTECTING ANY WORK AREAS NEAR TRAFFIC IN ACCORDANCE WITH THE MMUTCD.
7. IF THE CONTRACTOR DECIDES TO PERFORM THE CONSTRUCTION WORK IN A SEQUENCE OTHER THAN SHOWN IN THIS TRAFFIC CONTROL PLAN, THE CONTRACTOR SHALL PROVIDE COMPLETE REVISED TRAFFIC CONTROL PLANS TO BE APPROVED BY THE ENGINEER.
8. ALL TRAFFIC CONTROL DEVICES, INCLUDING OVERHEAD SIGNS ON ROADS OPEN TO TRAFFIC THAT ARE NOT CONSISTENT WITH TRAFFIC OPERATION, SHALL BE COVERED, REMOVED OR REVISED AS DIRECTED BY THE ENGINEER.
9. "ROAD WORK AHEAD" SIGNS SHALL BE MOUNTED APPROX. 300 FT (1 BLOCK) IN ADVANCE OF THE CONSTRUCTION AND SHALL HAVE A TYPE "A" LOW INTENSITY FLASHING AMBER WARNING LIGHT MOUNTED ON THEM.
10. "ROAD CLOSED AHEAD" SIGNS SHALL BE ERECTED APPROX. 300 FT (1 BLOCK) IN ADVANCE OF THE CLOSURE.
11. TYPE "A" LOW INTENSITY AMBER WARNING LIGHTS SHALL BE MOUNTED ON ALL ADVANCE WARNING SIGNS AND ON ALL TYPE I AND TYPE III BARRICADES WHEN USED AT NIGHT OR TO IDENTIFY HAZARDS.
12. ADDITIONAL SIGNING MAY BE REQUIRED FOR SEPARATE LANE CLOSURES. THE SIGNING SHALL BE IN CONFORMANCE WITH "TEMPORARY TRAFFIC CONTROL ZONE LAYOUTS" FIELD MANUAL DATED JANUARY 2014 AND SHALL BE CONSIDERED INCIDENTAL.
13. THE CONTRACTOR SHALL PLACE DRUMS THROUGHOUT THE PROJECT TO DELINEATE HAZARDOUS AREAS AND FACILITATE DAY-TO-DAY CHANNELIZATION OF TRAFFIC (INCIDENTAL).

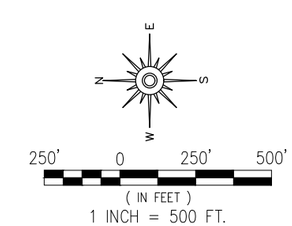

PROPOSED CONSTRUCTION AREA

SIGNAGE ESTIMATED QUANTITIES

ITEM	DESIGN	NO.	REMARKS
ROAD WORK AHEAD	W20-1	7	48"x 48" DOUBLE POST MOUNTED WITH FLASHER
FLASHING AMBER WARNING LIGHTS	LOW INTENSITY	11	AS REQUIRED
TYPE B CHANNELIZING DEVICE	DRUM	60	LANE SEPERATION

I HEREBY CERTIFY THAT THIS PLAN WAS PREPARED BY ME OR UNDER MY DIRECT SUPERVISION AND THAT I AM A DULY LICENSED PROFESSIONAL ENGINEER UNDER THE LAWS OF THE STATE OF MINNESOTA.

SIGNATURE: Patrick Loomis

PATRICK LOOMIS
TYPE NAME

DATE: 04/15/2018

LIC. NO: 49099

CITY OF DULUTH
ENGINEERING DIVISION
411 W. 1ST ST. STE. 211
DULUTH, MN 55802

TRAFFIC CONTROL

CITY PROJECT NO.: 1690

STATE AID PROJECT NO.: NA

DRAWN BY: SCA / DJK

TRAFFIC CONTROL - BRISTOL

SHEET NO. 34 OF 36

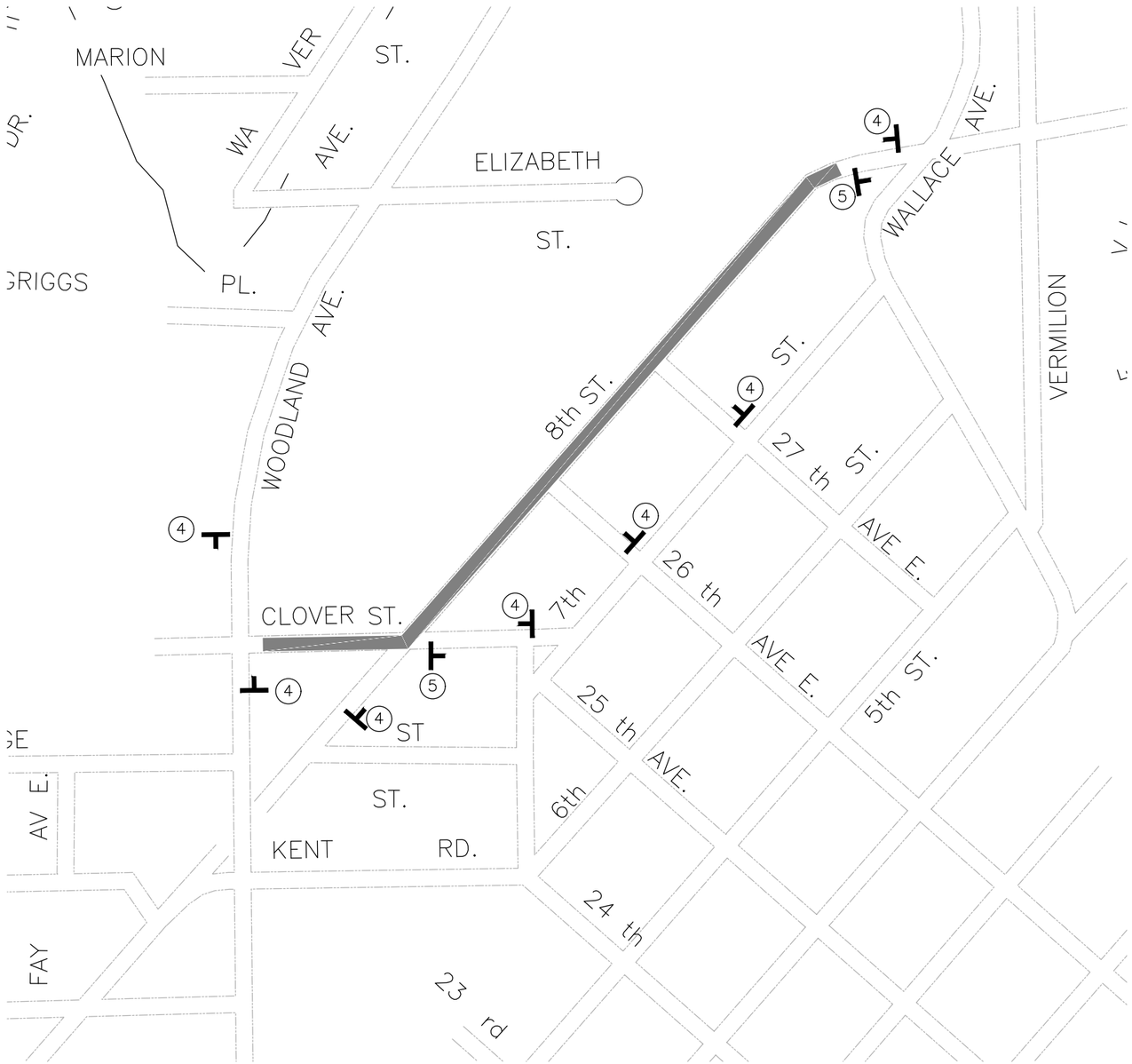

TRAFFIC SIGN LEGEND

DENOTES	SIGN	QNTY
1	ONE LANE ROAD AHEAD 48" X 48" W20-4	7
2	48" X 48" W20-7a	
3	BE PREPARED TO STOP 48" X 48" W20-X5	
4	ROAD WORK AHEAD 48" X 48" W21-4	
5	END ROAD WORK G20-2A 48" X 24"	
	TYPE "A" FLASHER	
	SIGN	

TRAFFIC CONTROL NOTES

1. THE CONTRACTOR SHALL FURNISH, INSTALL AND MAINTAIN THE DEVICES IN THIS TRAFFIC CONTROL PLAN UNLESS OTHERWISE NOTED.
2. ALL TRAFFIC CONTROL DEVICES SHALL CONFORM TO THE MINNESOTA MANUAL ON UNIFORM TRAFFIC CONTROL DEVICES (MMUTCD) INCLUDING " "TEMPORARY TRAFFIC CONTROL ZONE LAYOUTS" DATED JANUARY 2018. AVAILABLE AT: (http://www.dot.state.mn.us/trafficeng/publ/fieldmanual/index.html)
3. FIELD CONDITIONS MAY REQUIRE MODIFICATIONS OF THIS LAYOUT AS DEEMED NECESSARY BY THE ENGINEER.
4. THE NUMBER AND PLACEMENT OF TRAFFIC CONTROL DEVICES WILL DEPEND UPON THE SEQUENCE OF THE CONTRACTOR'S OPERATION.
5. ANY DISTANCES DEPICTED ARE APPROXIMATE.
6. THE CONTRACTOR IS RESPONSIBLE FOR PROTECTING ANY WORK AREAS NEAR TRAFFIC IN ACCORDANCE WITH THE MMUTCD.
7. IF THE CONTRACTOR DECIDES TO PERFORM THE CONSTRUCTION WORK IN A SEQUENCE OTHER THAN SHOWN IN THIS TRAFFIC CONTROL PLAN, THE CONTRACTOR SHALL PROVIDE COMPLETE REVISED TRAFFIC CONTROL PLANS TO BE APPROVED BY THE ENGINEER.
8. ALL TRAFFIC CONTROL DEVICES, INCLUDING OVERHEAD SIGNS ON ROADS OPEN TO TRAFFIC THAT ARE NOT CONSISTENT WITH TRAFFIC OPERATION, SHALL BE COVERED, REMOVED OR REVISED AS DIRECTED BY THE ENGINEER.
9. "ROAD WORK AHEAD" SIGNS SHALL BE MOUNTED APPROX. 300 FT (1 BLOCK) IN ADVANCE OF THE CONSTRUCTION AND SHALL HAVE A TYPE "A" LOW INTENSITY FLASHING AMBER WARNING LIGHT MOUNTED ON THEM.
10. "ROAD CLOSED AHEAD" SIGNS SHALL BE ERECTED APPROX. 300 FT (1 BLOCK) IN ADVANCE OF THE CLOSURE.
11. TYPE "A" LOW INTENSITY AMBER WARNING LIGHTS SHALL BE MOUNTED ON ALL ADVANCE WARNING SIGNS AND ON ALL TYPE I AND TYPE III BARRICADES WHEN USED AT NIGHT OR TO IDENTIFY HAZARDS.
12. ADDITIONAL SIGNING MAY BE REQUIRED FOR SEPARATE LANE CLOSURES. THE SIGNING SHALL BE IN CONFORMANCE WITH "TEMPORARY TRAFFIC CONTROL ZONE LAYOUTS" FIELD MANUAL DATED JANUARY 2014 AND SHALL BE CONSIDERED INCIDENTAL.
13. THE CONTRACTOR SHALL PLACE DRUMS THROUGHOUT THE PROJECT TO DELINEATE HAZARDOUS AREAS AND FACILITATE DAY-TO-DAY CHANNELIZATION OF TRAFFIC (INCIDENTAL).

SIGNAGE ESTIMATED QUANTITIES

ITEM	DESIGN	NO.	REMARKS
ROAD WORK AHEAD	W20-1	7	48"x 48" DOUBLE POST MOUNTED WITH FLASHER
FLASHING AMBER WARNING LIGHTS	LOW INTENSITY	11	AS REQUIRED
TYPE B CHANNELIZING DEVICE	DRUM	60	LANE SEPERATION

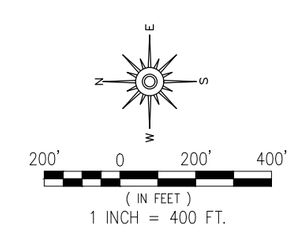

PROPOSED CONSTRUCTION AREA

I HEREBY CERTIFY THAT THIS PLAN WAS PREPARED BY ME OR UNDER MY DIRECT SUPERVISION AND THAT I AM A DULY LICENSED PROFESSIONAL ENGINEER UNDER THE LAWS OF THE STATE OF MINNESOTA.

SIGNATURE: Patrick Loomis

PATRICK LOOMIS
TYPE NAME

DATE: 04/15/2018

LIC. NO: 49099

CITY OF DULUTH
ENGINEERING DIVISION
411 W. 1ST ST. STE. 211
DULUTH, MN 55802

TRAFFIC CONTROL

CITY PROJECT NO.: 1690

STATE AID PROJECT NO.: NA

DRAWN BY: SCA / DJK

31 TC CLOVER - 8TH

SHEET NO. 35 OF 36

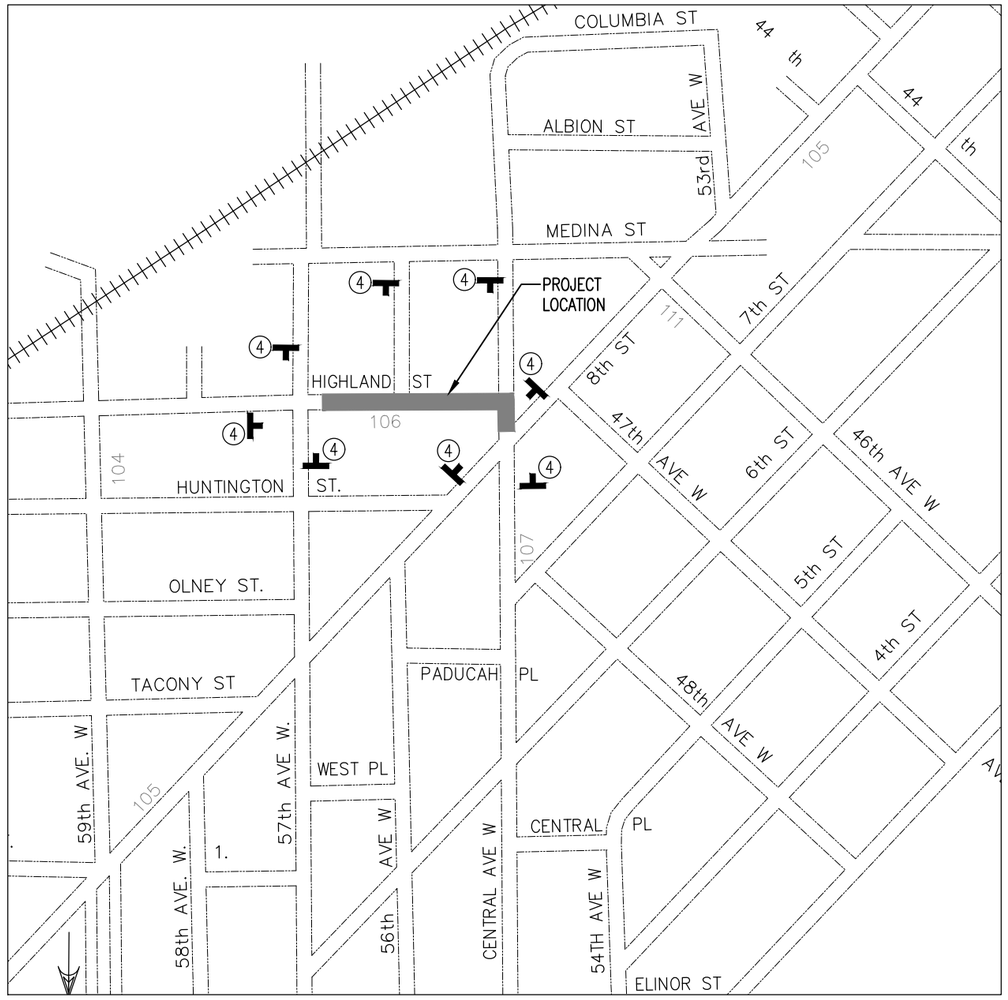

TRAFFIC SIGN LEGEND

NOTE	SIGN	QNTY
1	ONE LANE ROAD AHEAD 48" X 48" W20-4	7
2	48" X 48" W20-7a	
3	BE PREPARED TO STOP 48" X 48" W20-X5	
4	ROAD WORK AHEAD 48" X 48" W21-4	
5	END ROAD WORK G20-2A 48" X 24"	
	TYPE "A" FLASHER	
	SIGN	

TRAFFIC CONTROL NOTES

1. THE CONTRACTOR SHALL FURNISH, INSTALL AND MAINTAIN THE DEVICES IN THIS TRAFFIC CONTROL PLAN UNLESS OTHERWISE NOTED.
2. ALL TRAFFIC CONTROL DEVICES SHALL CONFORM TO THE MINNESOTA MANUAL ON UNIFORM TRAFFIC CONTROL DEVICES (MMUTCD) INCLUDING " "TEMPORARY TRAFFIC CONTROL ZONE LAYOUTS" DATED JANUARY 2018. AVAILABLE AT: (http://www.dot.state.mn.us/trafficeng/publ/fieldmanual/index.html)
3. FIELD CONDITIONS MAY REQUIRE MODIFICATIONS OF THIS LAYOUT AS DEEMED NECESSARY BY THE ENGINEER.
4. THE NUMBER AND PLACEMENT OF TRAFFIC CONTROL DEVICES WILL DEPEND UPON THE SEQUENCE OF THE CONTRACTOR'S OPERATION.
5. ANY DISTANCES DEPICTED ARE APPROXIMATE.
6. THE CONTRACTOR IS RESPONSIBLE FOR PROTECTING ANY WORK AREAS NEAR TRAFFIC IN ACCORDANCE WITH THE MMUTCD.
7. IF THE CONTRACTOR DECIDES TO PERFORM THE CONSTRUCTION WORK IN A SEQUENCE OTHER THAN SHOWN IN THIS TRAFFIC CONTROL PLAN, THE CONTRACTOR SHALL PROVIDE COMPLETE REVISED TRAFFIC CONTROL PLANS TO BE APPROVED BY THE ENGINEER.
8. ALL TRAFFIC CONTROL DEVICES, INCLUDING OVERHEAD SIGNS ON ROADS OPEN TO TRAFFIC THAT ARE NOT CONSISTENT WITH TRAFFIC OPERATION, SHALL BE COVERED, REMOVED OR REVISED AS DIRECTED BY THE ENGINEER.
9. "ROAD WORK AHEAD" SIGNS SHALL BE MOUNTED APPROX. 300 FT (1 BLOCK) IN ADVANCE OF THE CONSTRUCTION AND SHALL HAVE A TYPE "A" LOW INTENSITY FLASHING AMBER WARNING LIGHT MOUNTED ON THEM.
10. "ROAD CLOSED AHEAD" SIGNS SHALL BE ERECTED APPROX. 300 FT (1 BLOCK) IN ADVANCE OF THE CLOSURE.
11. TYPE "A" LOW INTENSITY AMBER WARNING LIGHTS SHALL BE MOUNTED ON ALL ADVANCE WARNING SIGNS AND ON ALL TYPE I AND TYPE III BARRICADES WHEN USED AT NIGHT OR TO IDENTIFY HAZARDS.
12. ADDITIONAL SIGNING MAY BE REQUIRED FOR SEPARATE LANE CLOSURES. THE SIGNING SHALL BE IN CONFORMANCE WITH "TEMPORARY TRAFFIC CONTROL ZONE LAYOUTS" FIELD MANUAL DATED JANUARY 2014 AND SHALL BE CONSIDERED INCIDENTAL.
13. THE CONTRACTOR SHALL PLACE DRUMS THROUGHOUT THE PROJECT TO DELINEATE HAZARDOUS AREAS AND FACILITATE DAY-TO-DAY CHANNELIZATION OF TRAFFIC (INCIDENTAL).

SIGNAGE ESTIMATED QUANTITIES

ITEM	DESIGN	NO.	REMARKS
ROAD WORK AHEAD	W20-1	8	48"x 48" DOUBLE POST MOUNTED WITH FLASHER
FLASHING AMBER WARNING LIGHTS	LOW INTENSITY	8	AS REQUIRED
TYPE B CHANNELIZING DEVICE	DRUM	15	LANE SEPERATION

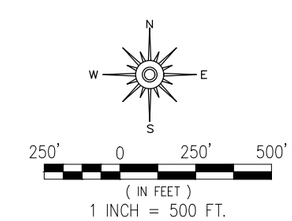

PROPOSED CONSTRUCTION AREA

I HEREBY CERTIFY THAT THIS PLAN WAS PREPARED BY ME OR UNDER MY DIRECT SUPERVISION AND THAT I AM A DULY LICENSED PROFESSIONAL ENGINEER UNDER THE LAWS OF THE STATE OF MINNESOTA.

SIGNATURE: Patrick Loomis

PATRICK LOOMIS
TYPE NAME

DATE: 04/15/2018

LIC. NO: 49099

CITY OF DULUTH
ENGINEERING DIVISION
411 W. 1ST ST. STE. 211
DULUTH, MN 55802

TRAFFIC CONTROL

CITY PROJECT NO.: 1690

STATE AID PROJECT NO.: NA

DRAWN BY: SCA / DJK

TRAFFIC CONTROL – HIGHLAND ST.

SHEET NO. 36 OF 36

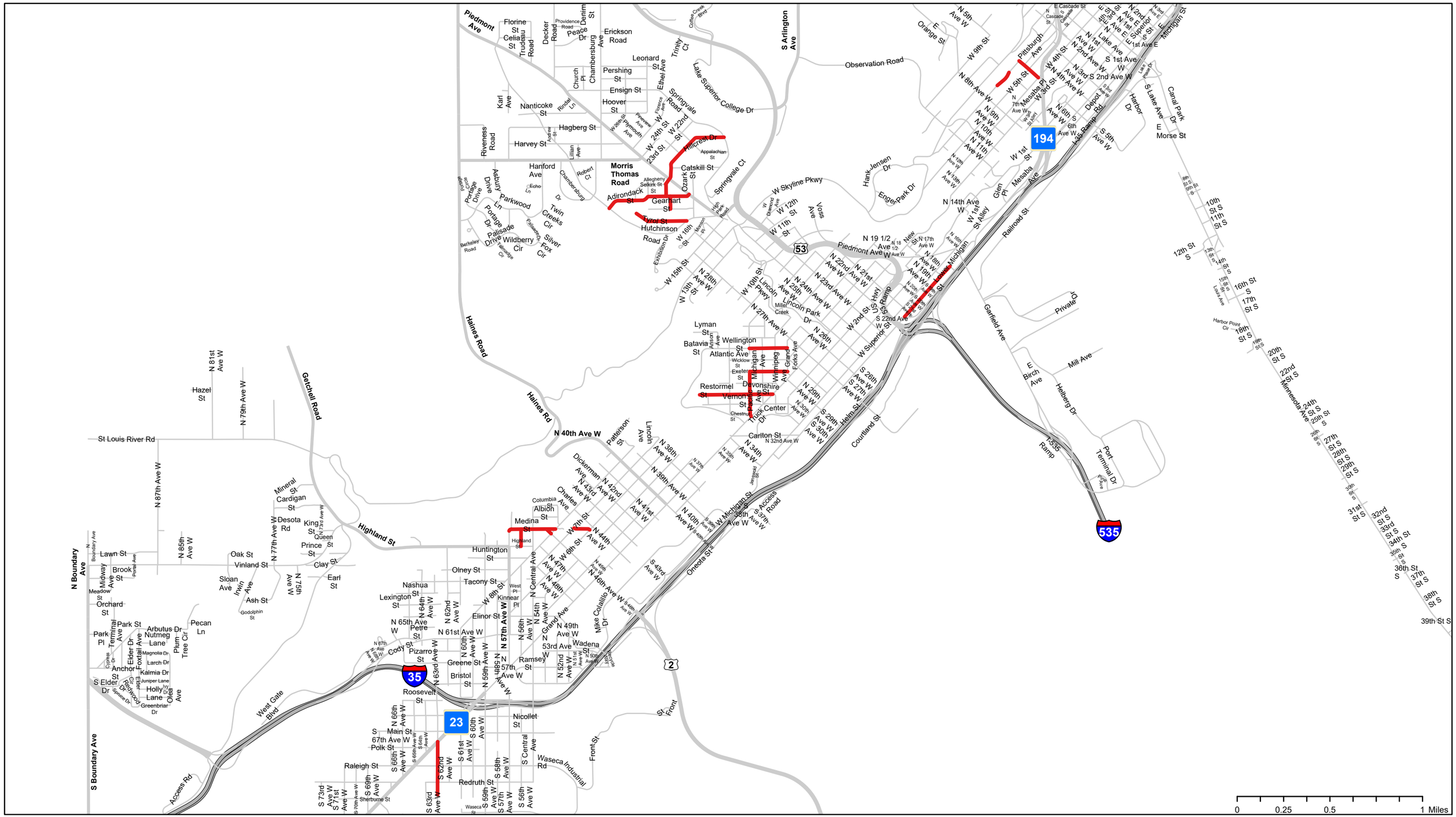

Sales Tax Street Projects

2020 Street Projects Central

Date Created: 9/16/2019

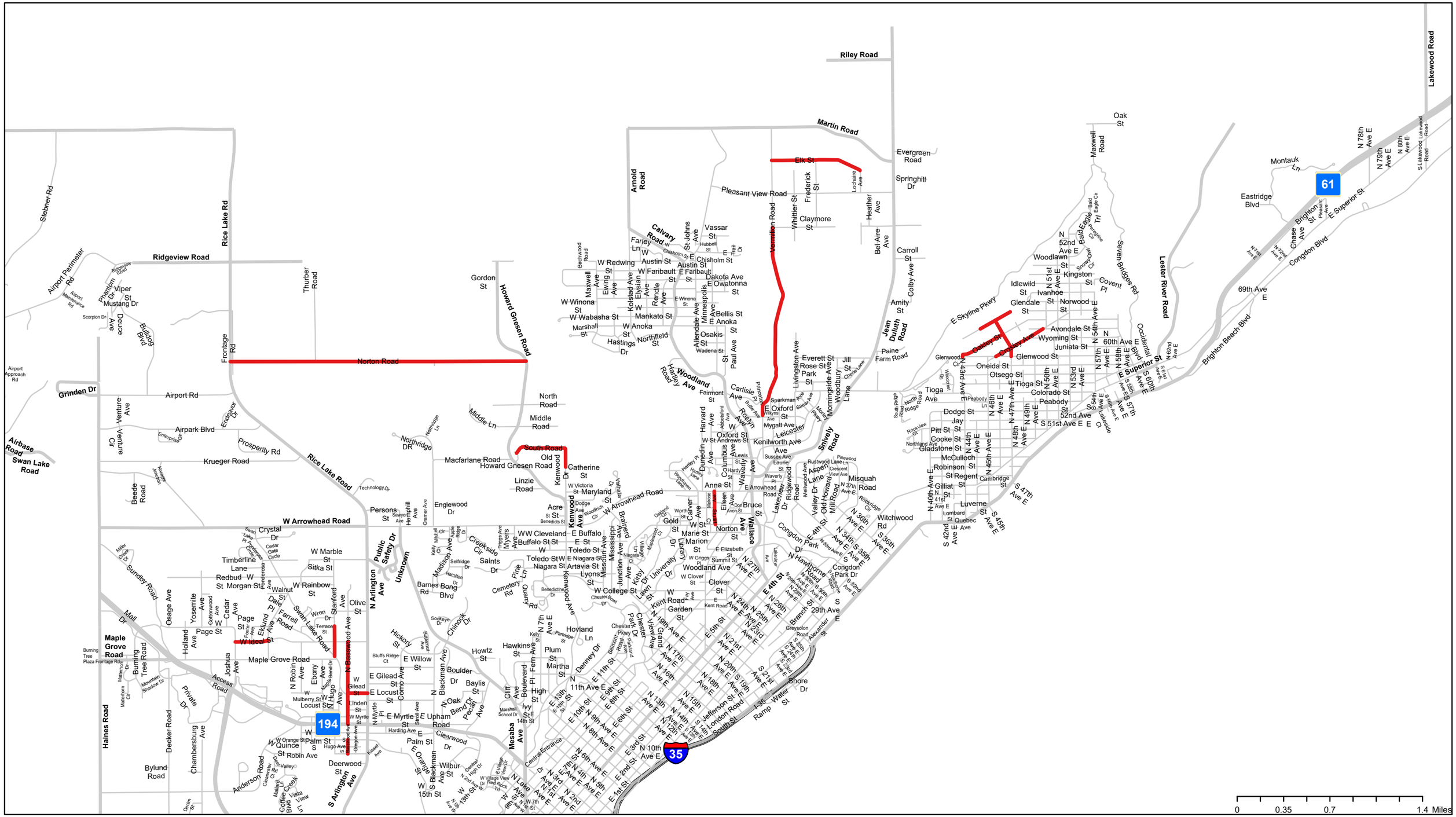

Sales Tax Street Projects

2020 Street Projects East

Date Created: 9/16/2019

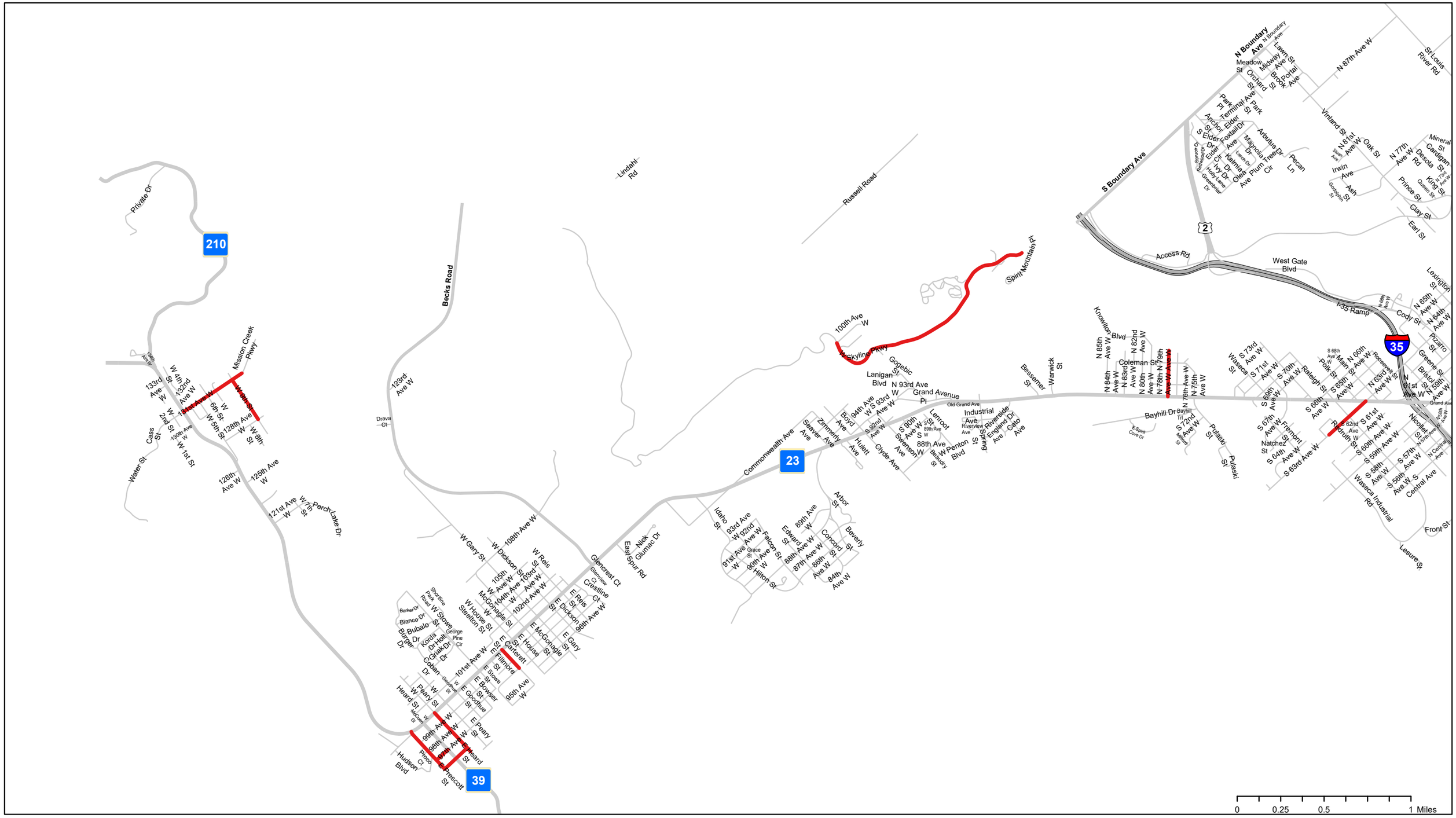

Sales Tax Street Projects

2020 Street Projects West

Date Created: 9/16/2019