CITY OF DULUTH, MINNESOTA
PUBLIC WORKS & UTILITIES DEPARTMENT
ENGINEERING DIVISION

Engineering Guidelines

for
Professional Engineering Services
and
Developments

Updated February 1, 2015

CITY APPROVAL

2/1/2015

APPROVED CHIEF ENGINEER OF TRANSPORTATION DATE

2-1-15

APPROVED CHIEF ENGINEER OF UTILITIES DATE

2-1-15

APPROVED CITY ENGINEER DATE

TABLE OF CONTENTS

APPENDIX CONTENTS 2

I. INTRODUCTION 3

II. DEVELOPMENT PROCEDURES AND REQUIREMENTS 4

- A. MEMORANDUM OF UNDERSTANDING (MOU) 5
- B. PAYING FOR PUBLIC IMPROVEMENTS 5

III. GENERAL ENGINEERING REQUIREMENTS 8

IV. TRANSPORTATION REQUIREMENTS 8

- A. LOCAL STREET DESIGN STANDARDS 9
- B. STREET EXTENSIONS STANDARDS FOR LIMITED RESIDENTIAL DEVELOPMENT 11
- C. TYPICAL SECTION STANDARDS 12
- D. DRIVEWAYS AND ALLEYS 12

V. UTILITIES REQUIREMENTS 12

- A. NATURAL GAS 13
- B. WATER 14
- C. WASTEWATER COLLECTION SYSTEM 15
- D. STORM WATER 17

VI. VACATION AND EASEMENT REQUIRMENTS 28

VII. PLAN SUBMITTAL REQUIREMENTS 28

VIII. CONSTRUCTION INSPECTION 29

IX. MATERIALS TESTING 30

X. SHOP DRAWINGS 30

XI. POST CONSTRUCTION SUBMITTALS 30

- A. RECORD DRAWINGS 31
- B. ELECTRONIC DATA SUBMITTAL 35

XII. SURVEY REQUIREMENTS 35

XIII. MISCELLANEOUS REQUIREMENTS 37

- A. CITY EXPENSES 37
- B. WARRANTY 38

APPENDIX 39

APPENDICES

APPENDIX A
Example: Memorandum of Understanding (MOU)

APPENDIX B
Application to Make Public Improvements Privately

APPENDIX C
Street Extensions Standards for Limited Residential Development Matrix & Standard Termini

APPENDIX D
Example: Typical Sections

APPENDIX E
City of Duluth Driveway Entrance Requirements

APPENDIX F
Policy on the Issuance of Driveway Permits for Private Improvements in Right-of-Way

APPENDIX G
Sanitary Sewer Basins – General Map

APPENDIX H
Unified Development Code Stormwater section

APPENDIX I
Preliminary Design Submittal Worksheet

APPENDIX J
Drainage Report Submittal Checklist

APPENDIX K
Example: Standard SWPPP Plan Sheets

APPENDIX L
MS4 Statement of Compliance

APPENDIX M
Example: City of Duluth – Plan Sheet – Title Page

APPENDIX N
Water Main Check-off List

APPENDIX O
Water Valve, Hydrant and Service Installation Records

APPENDIX P
Duluth Sanitary Sewer Wye Record

I. INTRODUCTION

Welcome to the City of Duluth's Engineering Division!

The Engineering Division (Engineering) is part of the Public Works and Utilities Department in the City of Duluth. Engineering is responsible for overseeing design and construction of public projects located in and affecting the public right-of-way, including surface transportation, bridges, driveway and alley access, traffic signals, parking, and utility infrastructure.

Engineering establishes and ensures that design standards and construction specifications are observed. Engineering has a responsibility to the public at large to create and maintain a consistent and reliable utility and transportation system. This system is planned, designed, and constructed according to the latest design standards and Engineering ensures the infrastructure is constructed to the highest and most current standards.

Additionally, Engineering issues a variety of permits that affect the public infrastructure such as excavation in city right-of-way, driveway aprons, street and sidewalk obstruction, over-sized loads, accessible parking areas, new culverts, and sewer, water and gas main extensions and connections. Permits related to work performed on private property are administered by the Construction Services Division.

In order to standardize engineering requirements for developers and engineers performing work within the City of Duluth, The *Engineering Guidelines for Professional Engineering Services and Developments* was developed by the Engineering Division to assist and convey direction to developers, engineering professionals, project managers, contractors, and residents when their projects include construction or connection to public infrastructure facilities within the City of Duluth.

These *Guidelines* as well as the city's "Standard Construction Specifications" outline the standards required when developing and constructing a project in the City of Duluth. They should be incorporated into the preparation of plans and specifications for sanitary sewer, storm sewer and water quality improvements, water main, natural gas, trails, and street construction within the City of Duluth. Compliance with these documents will help provide quality projects and assure uniform performance standards for the citizens of Duluth, Minnesota, and can save considerable time during the development process.

The *Guidelines* serve as a general reference for engineering requirements in the design, plan, and specification preparation in an effort to facilitate consistent plan preparation and construction of public works and to improve the quality of plan submittal and subsequent review and approval time. The *Guidelines* also strives to clarify where "Engineering" fits in as a part of the greater project and land development process.

The *Engineering Guidelines for Professional Engineering Services and Developments* is a "living" document that will be updated and revised as necessary to facilitate the

development of projects within the City of Duluth. With this document, we hope you will better understand the requirements and more easily navigate Engineering.

City staff is available to answer your questions or concerns as the project progresses through the process. Engineering is located in room 211, on the second floor of Duluth's City Hall. For general questions relating to this document, the Engineering Division, or any permits issued from this office, you may contact the front counter at (218) 730- 5200.

If the engineering staff cannot answer your questions, specific questions relating to transportation and utilities may be directed to:

Eric Shaffer, PE
Chief Engineer of Utilities
Room 211, 411 West First Street
Duluth, MN 55802
Phone: (218) 730-5072
eshaffer@duluthmn.gov

Cari Pedersen, PE
Chief Engineer of Transportation
Room 211, 411 West First Street
Duluth, MN 55802
Phone: (218) 730-5091
cpedersen@duluthmn.gov

Questions may also be forwarded to the City Engineer:

Cindy Voigt, PE
City Engineer
Room 211, 411 West First Street
Duluth, MN 55802
Phone: (218) 730-5071
cvoigt@duluthmn.gov

You may also visit our city website for a copy of this document and other information regarding city code and ordinances, zoning, planning, and much more at www.duluthmn.gov. We look forward to working with you to ensure your plan and project development experience in Duluth is a pleasant one.

II. DEVELOPMENT PROCEDURES AND REQUIREMENTS

Most development projects require approvals from the Planning Department or Planning Commission prior to final design of the project. Therefore, it is recommended that developers meet with the planning department prior to commencing work on the engineering aspects of the development.

Once the initial contact with planning has occurred, the developer should meet with Engineering to discuss the proposed development and the overall scope of the project. At this time, a project manager from Engineering will be assigned to the project to provide engineering assistance to facilitate the process and to assure compliance with the engineering standards for the City.

The developer is responsible to hire a professional engineer registered in the state of Minnesota to perform the required professional services, which may include, but are not limited to topographic survey, grading, drainage, street, utility plans, and any necessary permit submittals.

A. Memorandum of Understanding (MOU)

A Memorandum of Understanding will be required for most projects developed within the City of Duluth, and in particular where the intention of the developer is to turn over ownership, maintenance, and operation of the public improvements to the city, and whenever public improvements or other conditions of approval are necessary. The MOU generally documents the following:

- Specific understandings of both parties relative to the construction of public and private improvements associated with the project.
- Specific project guidance and requirements.
- Which elements of the project will be private and which will be public.
- Which elements of the project will be paid for by the Developer.
- Amount of deposit to be held by the city until project certification and acceptance.

No construction may begin on a project until the MOU is signed by both parties. The template of a typical MOU can be found in Appendix A.

B. Paying for Public Improvements

Two options are available to allow a developer to have local improvements made and paid for in the City of Duluth:

> "Public Improvements Made Privately" where the developer is the responsible party to design, construct, and pay for the desired public improvement, and
>
> "Special Assessments" where the developer chooses to construct the desired public improvements that are paid for either in part or in whole through an assessment against the benefiting property owner(s).

1. <u>Public Improvements Made Privately</u>

The following procedure applies when the developer chooses to construct a public improvement that will be designed, constructed, and paid for privately. This process, as a general rule, is less costly and quicker to implement than the special assessment process.

Prior to construction:

a. The consulting engineer determines what the current standards are for the type of improvements contemplated.
b. The consulting engineer in consultation with the developer prepares preliminary plans for the improvements in accordance with the applicable standards.

c. The consulting engineer reviews preliminary plans with Engineering and other required city offices.
d. The Consulting Engineer reviews the Storm water Pre-submittal Requirement Worksheet with Engineering.
e. Following approval by the city, the consulting engineer submits plans to other permitting agencies (WLSSD, MPCA, etc.), as required.
f. The developer secures all permits required from other permitting agencies and provides copies of required permits to the City Engineer.
g. The city prepares a MOU between the city and the developer if any of the improvements are to be connected to City streets or utilities or the City will be taking over control of or maintenance of any of the improvements. The MOU will require the developer to deposit funds for city expenses, including project reviews and approval by Engineering, as required. The consulting engineer shall furnish exhibits for the MOU as required.
h. The consulting engineer must furnish a letter to Engineering stating they have been hired for construction engineering, inspection, and record drawings.
i. All necessary easements must be legally described in recordable form approved by the City Attorney. Developer must establish to the satisfaction of the City Attorney that they will be able to legally dedicate the easements, without cost and absolutely to the City. All final easements must be signed by the developer prior to construction; however the city will not accept the project until easements are accepted by city council and recorded. All costs to obtain easements or right-of-way, draft the documents and recording fees are the responsibility of the developer. All easements are granted to the city.
j. The developer must provide documentation if additional owners of adjacent property(ies) are participating in the project cost. This will assure that these property owners will not be charged fees in lieu of assessments in the future.
k. The consulting engineer submits final plans and specifications to Engineering for review and approval. All plans and specifications shall be signed by a professional engineer registered in the state of Minnesota.
l. The developer hires a contractor to construct improvements per approved plan.
m. The contractor must have a performance bond and certificate of insurance approved by the city attorney on file in the purchasing office. The city shall be as additional insured on the insurance policy and dual obligee on bond.
n. The developer and contractor both sign the *Application to Make Public Improvements Privately*. A copy of this is included in Appendix B.
o. The developer hires a consulting engineer or agrees to reimburse the city to provide construction inspection, at the discretion of the City Engineer. City inspection costs shall be reimbursed by the developer including city audited overhead and direct expenses.
p. The consulting engineer shall provide notification of project scope, timeline, and emergency contact information to appropriate residents and City Council members prior to the start of construction.
q. Construction may begin.

During Construction:

a. Inspection is required for all work to be publicly owned, including underground utilities, streets, sidewalks and restoration.
b. Changes to approved plans must be approved by the City Engineer prior to construction.
c. Coordinate water main bacteria and pressure testing with the city 48 hours (2 working days) prior to scheduled test.
d. Coordinate sanitary sewer televising with the city at least one week in advance.
e. Obtain and compile record drawing information and coordinate data and complete utility forms.

After Construction:

a. The consulting engineer completes all post construction submittals (record drawings, etc.).
b. Warranty, final inspections, and acceptance of the project by the City Engineer or designee.
c. Certification of acceptance of project submitted to City Council by City Engineer.
d. The city assumes ownership of specified improvements and begins locating of city owned utilities in accordance with the requirements of the Gopher State One Call System and snow removal for new city streets.
e. Individual service permits may be issued.

2. <u>Special Assessments</u>

When the developer chooses to construct public improvements that are paid for either in part or in whole through an assessment against the benefited property, the developer has several options along with certain responsibilities.

The developer will be required to submit a deposit for 20% of the estimated cost of designing and constructing the planned improvements before construction is started.

One of the first decisions the developer will need to make is whether to have the Engineering Division perform the engineering design and inspection services for the project, or to hire a consulting engineer to perform this work. In either case, the engineering costs would be eligible for inclusion in the final assessment roll, but are not considered part of the 20% deposit that is required of the developer.

If the property to be assessed is solely owned by a single party, the developer may opt to enter into an agreement approved by the city council to waive all rights to a public hearing and withdrawal of petition. This would allow the assessment process to proceed more quickly. If the developer doesn't own the requisite property and cannot secure the consent of all affected property owners, he or she will have to follow the assessment procedures set out in the City Charter.

If the developer chooses to hire a consulting engineer to perform the engineering services, such consultant shall prepare the cost estimates necessary for the council resolutions.

In addition, if the project involves other property owners, informational meetings with the residents will be required.

Additional information on special assessments can be found in the City of Duluth Special Assessment Board Policy Handbook.

III. GENERAL ENGINEERING REQUIREMENTS

Listed below are the general requirements to ensure plan development, project construction, surveys, and record drawings are in accordance with the city's engineering standards, regulations, and policies. The requirements of this document shall be considered the minimum. Specific projects may have additional requirements that may be more stringent.

a. The most recent version of the *City of Duluth Standard Construction Specifications* and any supplements, addenda, and special provisions shall apply to all work.
b. The developer will be required to upgrade any existing infrastructure with insufficient capacity to serve the proposed development.
c. Construction shall not begin on a project until all engineering requirements for public improvements have been satisfied.
d. For all projects, WPA soil boring maps and sewer plats (on file in the Engineering Division) shall also be reviewed by the engineer to determine approximate rock profiles.
e. All disturbed areas within an existing right of way shall be restored with sod to a condition equal to or better than the existing condition prior to construction.
f. All projects with land disturbance greater than 3,000 square feet require a City Erosion and Sediment Control Permit. For land disturbance greater than 1 acre, an MPCA NPDES Construction Activity Permit *AND* a City Erosion and Sediment Control Permit shall be obtained.

IV. TRANSPORTATION REQUIREMENTS

The Engineering Division is responsible for all street and roadway related projects within the public right-of-way, including the inspection, construction, and replacement of streets, alleys, bridges, sidewalks, and traffic signals, as well as addressing traffic concerns.

The following general transportation requirements will be required for most projects developed within the City of Duluth:

a. A traffic study may be required if Engineering determines there may be an adverse impact on traffic, mobility, and/or safety due to the proposed development.
b. Soil borings shall be completed prior to the design of any street project. The borings shall be evaluated by a registered engineer and recommendations made in writing. Borings shall be located within the project area at intervals necessary to accurately assess the soil conditions within the project area. Boring information shall be included on the drawings. A copy of the boring information and geotechnical report signed by a licensed engineer shall be submitted to Engineering.
c. Follows the local Street Design Standards (see Section A, below)
d. If a street is being extended, the Street Extensions Standards for Limited Residential Development policy will apply (see Section B, below)

A. Local Street Design Standards

The minimum standard cross-section for the construction or reconstruction of a local street shall conform to the Planning Commission's "Local Street Design Standards and Process for Variances," listed below:

Dimension Requirements – Local Streets			
	Street Width Curb-Face to Curb-Face	Boulevard Width	Sidewalk Width
New	28'	8' – 10'	5'
Reconstructed	24' – 28'	4' – 8'	5'
Historic Designation	per guidelines below		

1. <u>Boulevards</u>

Boulevards shall be provided on both sides of a street and required to be planted with trees with a minimum caliper of 2 ½" for all street improvement projects. Spacing should be a maximum of 40' on center. (A diversity of shade trees should be planted to avoid problems associated with disease killing all the trees within a neighborhood.)

2. <u>Sidewalks</u>

Sidewalks shall be provided on both sides of a street. A variance may be allowed for sidewalk on only one side of street if it will help to preserve existing mature trees or allow a wide enough boulevard for planting new trees.

3. Reconstructed Streets

Under certain circumstances and through granting of variances (as described below), reconstructed streets may be less than 24 feet, but in no case shall they be less than 20-feet wide. At least one of the following criteria must be met to grant such a variance:

a. Where adjacent collector streets are aligned in a way that encourages traffic to short-cut through a neighborhood, narrower streets, along with other measures to discourage such short-cutting are justified; or
b. The presence of alleys or other off-street parking opportunities which eliminate the occurrence of on-street parking by residents justifies narrower streets; or
c. Low residential densities (wide single family lots) which eliminate the need for on-street parking may allow for narrower street than standard; or
d. Mature trees within the right-of-way, which would otherwise be able to be retained, justifies narrower streets; or
e. Where the character of the immediate neighborhood would otherwise be negatively affected (i.e., scale of street relative to adjacent buildings: grades requiring new retaining walls which would be out of character with the existing architecture; wide street distracting from important views of residences; loss of privacy screening; degradation of gardens; etc.) a narrower street is justified; or
f. Where there would be insufficient space for snow storage because the wider street would result in more plowed snow to be stored and thus higher snow banks which would cause visibility problems.

4. Historic Designation

A 20-feet wide variance would be allowed on an existing 20-feet-or-less street if at least two of the following criteria are met:

a. The street is located within a locally designated or a proposed designated historic or conservation district. (Survey in place or underway determining historic designation or significance.)
b. If and only if the street has historically always been 20-feet-or-less in width.
c. At least one locally designated historic landmark or national register home or property is located on the street.
d. An historic street material or feature is present (which should be respected, i.e., trees, landscape features, granitoid, street lighting, signage, retaining walls, fencing, monuments, curbing, etc.). The “new” street material should reflect sensitivity to these materials.
e. A ruling body which deals directly with Duluth’s heritage or Duluth’s historical structures and areas (such as the Heritage Preservation Commission) has determined that the historic character of the immediate neighborhood would be affected by widening the street to more than a 20-foot width.
f. In situations in which, due to extreme topographical limitations, a street width variance would allow a lower cost or more reasonable alternative in the construction or reconstruction of the street.

5. Variance Procedure

The Planning Commission shall be the body that rules on variance requests to deviate from the above enumerated standards, i.e. street widths, boulevard widths and location, sidewalk widths and street trees except for issues involving designated historic sites or districts. Appeals to the planning commission decision are ruled on by the City Council. In locally designated or proposed designated historic sites and districts, the Historical Preservation Commission (HPC) is the certified local government unit that deals with historic preservation issues. The HPC shall have opportunity to review and make recommendations to Planning staff before the Planning Commission rules on the variance request. Any property owner adjacent to the street or any city department or division manager may request such variance.

B. Street Extensions Standards for Limited Residential Development

The Street Extension Standards establish the requirements for extending an existing street for the purposes of accessing a proposed residential development. In many cases, the existing street does not meet the current Local Street Design Standards, or the Typical Section Standards, both addressed elsewhere in this document.

The Street Extension Standards provide a reasonable and consistent manner by which to address the required level of improvements to both an existing street that will serve as a connection to a proposed street extension, and the proposed street extension itself. It is recognized that certain situations may require a variance from these standards. Any variance requests shall be reviewed and acted upon by the Special Assessment Board following review and recommendations of the City Engineer.

In general, the costs to improve, reconstruct, or construct the existing street to the City of Duluth's minimum standards shall be the responsibility of the developer. At the discretion of the City Engineer, the existing street may be included in the city's formal Street Improvement Program (SIP) and constructed to SIP standards, with reconstruction costs to be shared between the city and adjacent property owners per SIP guidelines. In all cases, the extended street shall be constructed to City of Duluth standards with costs to construct the extended street to be the responsibility of the developer.

The "Street Extensions Standards for Limited Residential Development Matrix & Standard Termini" is located in Appendix C. Note that in all cases, the requirements represented are minimums, and in no case shall the extended street be constructed to a standard less than the existing street. Further, it is the responsibility of the designer to incorporate the requirements of the most current fire code observed by the Duluth Fire Department.

In addition, it is recognized that under those categories where a street is not constructed, reconstructed, or improved to City of Duluth standards for an urban bituminous street, there may be a need for a recordable "disclaimer" agreement

between the city and the developer so as to provide for the assessment of future street improvements against adjacent properties per city's code provisions regarding "Local Improvements" (Article VII, as amended by Ordinance 09-019-0).

C. Typical Section Standards

Generally and in most situations, a typical new road section in the City of Duluth will be built to urban design standards. The other typical section used within the City of Duluth is the rural design section, allowed only within areas indicated as rural residential in the *City of Duluth Comprehensive Land Use Plan* (2006) and only when approved by the City Engineer. In most cases the urban section will be required.

The standard specification for each type of road section is outlined in the table below and the example CAD drawings of the typical sections can be found in Appendix D.

City of Duluth Standard (Minimum)	Urban Bituminous	Rural Bituminous
Geotextile Fabric	Type 5 (non-woven)	Type 5 (non-woven)
Select Granular Backfill (mod <7%)	12"	12"
Class 5 Aggregate Base	8-1/2"	8-1/2"
Width of Street	28'	28' with 2' gravel shoulders
Drainage	as per city engineer	as per city engineer
Surfacing Material	bituminous	bituminous
Depth of Surface Material	3-1/2"	3-1/2"
Width of Surfacing	28'	24'
Concrete Curb & Gutter (B624)	Yes	

D. Driveways and Alleys

All driveways and alleys shall be installed in accordance with the City of Duluth Driveway Entrance Requirements contained in Appendix E, and as per the Policy on the Issuance of Driveway Permits for Private Improvements in Right-of-Way, found in Appendix F.

V. UTILITIES REQUIREMENTS

The Engineering Division is responsible for ensuring all utility projects, including the design, inspection, installation, and replacement of gas, water, sanitary sewer, and storm water improvements comply with state and federal regulations.

a. All underground utilities to be publicly owned shall be installed in the existing or proposed public right-of-way when feasible. Where, due to topography,

installation within the right-of-way is not possible, the city may accept underground utilities installed in a utility easement on a case by case basis.

b. All utilities that will be privately owned and maintained shall not be installed within public right-of-way.
c. Water, sanitary sewer and storm sewer laterals must be installed perpendicular to the street right of way and include a tracer wire locating box at the edge of the right of way per the City Master Construction Specifications. Private laterals shall not be installed within and parallel to the right of way.
d. Publicly owned utilities less than 15 feet deep installed outside the city right-of-way will require a minimum of a 20-foot wide permanent easement; utilities deeper than 15 feet shall have 30 foot wide easement. The utility must be centered within the easement, and the easement shall be dedicated to the city and recorded with St. Louis County prior to construction.
e. Public utilities not located within city right-of-way must be located in an easement where city maintenance crews have clear access to inspect and maintain the utility. All sanitary and storm sewer manholes must be accessible by city sewer cleaning equipment. This includes providing a driving surface if necessary to support this equipment.
f. Where public utilities are installed on private property, the property owner shall be responsible for all future surface restoration required due to repair or maintenance of the utility by city crews.
g. Infrastructure extensions not constructed and installed to city standards shall be corrected prior to city acceptance and prior to being placed into service. If defects are not corrected, the utility shall not be placed into service. Where, for any reason, the defective utility has been placed into service, the developer shall be responsible for ownership and maintenance of the utility until the defects are corrected.
h. Installation of all utilities shall extend entirely across the frontage of the lots to be served, unless otherwise approved by the city's engineer. If the project is completed in stages, then all utilities must be extended past the lot line of the last house served and beyond the pavement limits.
i. Where a property to be developed is not currently served by water and sewer, the developer shall be responsible for all costs to extend the utilities to the property.

A. Natural Gas

All extensions to the City of Duluth natural gas distribution system and services shall be designed and constructed in accordance with the *City of Duluth Public Works and Utilities Department Gas Operation and Maintenance Manual*, along with the *City of Duluth Standard Construction Specifications*, including any supplements, addenda, and special provisions.

a. The City no longer provides any underground natural gas pipe free of charge. The Developer shall pay for all gas mains and services installed or pay the two tier rate.
b. Any project with a natural gas component shall be reviewed by Engineering.

c. Natural gas mains in new developments shall not be installed until after curb and gutter for the street is placed.
d. All new services require a service application to be submitted to the Engineering Division prior to September 1st for installation that year.
e. Natural gas installers must be certified per the city standards.
f. For installation of pipes on new building sites, the site must be prepared (graded within 2" of final elevation) for installation no later than November 1 of each construction year.
g. After November 1, an approved trench must be excavated by the developer to enable installation of the line to occur prior to the following construction season. Trench details can be found in the most recent edition of the *City of Duluth Standard Construction Specifications*.

B. Water

All water mains shall be installed in accordance with the Recommended Standards for Water Works by the Great Lakes Upper Mississippi River Board of State Public Health and Environmental Managers (Ten-State Standards) except as stated below or as listed in the *City of Duluth Standard Construction Specifications* and any supplements, addenda or special provisions.

a. Minimum water main diameter shall be 8 inches unless approved otherwise by the city engineer.
b. The city may require upsizing of proposed water mains for future projects.
c. The city may require upsizing of existing mains, pressure reducing stations or booster stations to provide adequate flows to the proposed development area.
d. In general, water main extensions shall be publicly owned. The developer may request a water main to be privately owned if the main and the services are not located within the city right-of-way and where it will not serve any future development. Privately owned mains also require permitting from the Construction Services & Inspection Division.
e. The city will determine, on a case-by-case basis, if water booster stations or water pressure reducing stations required for the project will be owned by the developer or the city. All booster stations or pressure reducing stations to be owned by the city shall be designed and constructed to city standards. In all cases, the developer shall pay for installation of telemetry equipment for remote monitoring of the equipment by the city. Privately owned booster stations also require permitting from the Construction Services & Inspection Division and a Homeowners' Agreement.
f. Inspection of high-density polyethylene (HDPE) pipe must be performed by an inspector qualified by the City of Duluth.
g. Minimum fire flows for main extensions shall be in accordance with the City of Duluth Fire Department requirements.
h. Water main valves shall be spaced from 300 to 400 feet apart or at the end of every city block or as specified by the City Engineer.
i. Hydrant locations shall be spaced from 300 to 400 feet apart or at the end of every city block or as specified by the City of Duluth Fire Department. A hydrant

shall be provided at the end of all dead end mains unless a blow off is approved by the City Engineer for mains smaller than 6 inches.

j. Minimum cover on ductile iron water mains shall be 7'-0". Minimum cover on HDPE water mains, except dead ends, shall be 7'-6". Minimum cover on HDPE dead end water mains shall be 8'-0". Maximum cover of any main shall be 9'-0".
k. Water main extensions for mains 2 to 12-inches in diameter shall be HDPE unless specified otherwise by the City Engineer.
l. Material for water mains 14-inch and larger shall be determined on a case by case basis.
m. Water services may be copper or HDPE. Minimum size for copper water services shall be ¾ inch. Minimum size for HDPE water services shall be 1 inch.
n. The use of electro-fusion couplings shall be minimized and the location of any electro-fusion couplings shall be documented on the record drawings.
o. All existing valves and hydrants shall be operated only by city personnel.
p. Coordinate water main bacteria and pressure testing with the city 48 hours (2 working days) prior to scheduled test. Contact the Engineering Office at 218-730-5200. All pressure tests must be witnessed by the City. All bacteria samples will be collected and tested by the City.

C. Wastewater Collection System

All sanitary sewers shall be installed in accordance with the Recommended Standards for Wastewater Facilities by the Great Lakes Upper Mississippi River Board of State Public Health and Environmental Managers (Ten-State Standards) except as stated below or as listed in the *City of Duluth Standard Construction Specifications* and any supplements, addenda or special provisions.

a. All wastewater lift stations to be owned by the city shall be designed and constructed to city standards. The developer shall pay for installation of the station, including telemetry equipment (SCADA) for remote monitoring of the equipment by the city for both public and private (where applicable) owned stations.
b. The city may require upsizing of existing and proposed sewer mains and lift stations to provide adequate capacity to the development area or future projects.
c. In general, future sanitary sewer main extensions shall be publicly owned. The developer may request that a sanitary sewer main be privately owned if it is not located within the city right-of-way and where it will not serve any future development. Privately owned sanitary sewer mains also require permitting from the Construction Services & Inspection Division and a Homeowners' Agreement.
d. Minimum cover on sanitary sewers shall be six feet. Maximum cover on sanitary sewers shall be 15 feet without prior approval of the City Engineer.
e. Minimum slope on all publicly owned eight-inch sanitary sewer mains shall be 0.5%.
f. All drop manholes for eight-inch mains shall be inside drops as shown in the *City of Duluth Standard Construction Specifications*. For mains larger than eight-inch diameter, the design engineer shall recommend a drop structure for review by the City Engineer.

g. All dead end sanitary mains shall have a manhole at the end.
h. Sanitary or storm manholes shall not have steps.
i. Manholes for new construction shall have a minimum drop of 0.10 feet from the upstream invert to the downstream invert.
j. All new sanitary sewers will be inspected by the City with closed-circuit television. Coordinate sanitary sewer televising at least one week in advance. The engineer shall coordinate this by contacting Utility Operations at 218-730-4130. All other testing shall be witnessed and certified by the Engineer.
k. Any time a sanitary sewer lateral is excavated, the entire lateral must be capable of passing an air test prior to backfill. For project sites being redeveloped, all sanitary sewer service laterals to be reused MUST be capable of passing an air test. To reuse an existing clay tile lateral, it must be lined.

Consent Decree

The City of Duluth and WLSSD are bound by a Consent Decree filed with the United States Department of Justice and the Environmental Protection Agency. This Consent Decree limits the volume of any sanitary sewer extension to 10,000 gallons per day or less when located upstream of an identified sanitary sewer overflow. This includes all extensions located in city sanitary sewer basins one through 11 and 13 through 26. Basins 27, 28, 29, and 30 have no restrictions. A general map of the sanitary sewer basins is included in Appendix G. Specific limits of basins can be obtained in Engineering.

Infiltration and inflow removal work by the developer may be required when the wet weather design flow exceeds 10,000 gallons per day, and will be determined on a case by case basis. All costs for this work shall be borne by the developer.

It is anticipated that the Consent Decree will be completed prior to January 1, 2016. All projects over 10,000 gpd shall contact the Chief Engineer of Utilities to determine if Consent Decree limitations are still in effect.

Sanitary Sewer Extension Permits

All projects that add a substantial increase in wastewater flow to the City of Duluth wastewater collection system shall be required to obtain a MPCA Sanitary Sewer Extension Permit prior to construction. Projects that add substantial flow but do not construct new sanitary sewer mains will still require permitting. All permit questions shall be directed to the Chief Engineer of Utilities.

Sanitary sewer extension permits should be completed and forwarded to the Engineering Division along with WLSSD permit information. WLSSD forms are available on their website at www.wlssd.duluth.mn.us. Following review and approval by the city, signed forms shall be collected by the developer and forwarded to WLSSD along with the appropriate payment.

D. Storm Water

The community drainage system that serves the area in and around the City is comprised of pipes/tunnels, catch basin/manhole structures, and natural/constructed drainage ways that function as a system to capture and convey surface water through the community, that are owned and maintained individually by the City, MnDOT, County or other public agencies, or private property owners.

This system moves precipitation from rain and snow storms, and surface water from streams and creeks through the City to Lake Superior. The City wants to ensure that improvements, additions, repairs and replacements to the community drainage system are not detrimental to the system, and it continues to work as an interconnected system to minimize flooding and conveying storm water from the community, while at the same time ensuring that the quality of the water in the creeks, streams and lakes is not diminished. The Federal Clean Water Act requires the City to meet the requirements of the MPCA MS4 storm water permit program and demonstrate that the city takes responsibility for preventing pollution from entering our natural waterways.

All questions regarding stormwater management shall be addressed to Tom Johnson, stormwater project engineer, and can be reached at tajohnson@duluthmn.gov or at (218) 730-5103.

When developing a project in the City of Duluth, the following storm water policies, permits and codes shall be followed:

a. City's Standard Construction Specifications.
b. City of Duluth Unified Development Code. A copy of the UDC's section on stormwater requirements is included in Appendix I.
c. City of Duluth Municipal NPDES Separate Storm Sewer System (MS4) Storm water Permit; and.
d. MPCA General Permit Authorization to Discharge Stormwater Associated with Construction Activity under the NPDES and the MPCA NPDES Multi-Sector General Permit for Stormwater Discharges Associated with Industrial Activity Additional information regarding the MPCA permit programs can be found at www.pca.state.mn.us/index.php/water/water-types-and-programs/stormwater/index.html

<u>Plumbing Code Review Construction Services & Inspection Division versus Engineering Division Review</u>

The City policy for review, approval and permitting will be as follows (from the Construction Services & Inspections Division's Policy and Procedure Manual, item No. 4.14, Building storm drain point of disposal, revised 10/15/2014):

The point of disposal will be an engineered storm water treatment or collection system or the connection point to the public storm sewer system or natural drainage course. Plumbing permits will be issued for the work to the point of disposal and design and installation shall follow the requirements of the Minnesota State Plumbing Code.

The transition from plumbing to the engineered storm water treatment or collection system shall take place at the point of disposal which may be located within the 10 foot limitation listed in MSPC Sec. 4715.2820, Subp. 2. The testing requirement in this section only apply to the building storm drain piping, not the engineered storm water treatment or collection system. The plans shall clearly delineate this transition location.

Where new storm sewer will be owned by the City (via easement or within R.O.W.), the plans shall clearly delineate the limits of public versus private ownership.

Unified Development Code (UDC)

The City of Duluth UDC includes specific requirements for both temporary and permanent erosion control and water quality requirements and discharge rate, volume and temperature controls. The UDC is attached in Appendix H. The design engineer shall review the code to determine the specific requirements for each project. In addition to the submittals listed in the Code, additional submittals are included within this section.

MPCA MS4 Permit Summary/Requirements/Guidance

The City of Duluth is an MPCA designated Municipal Separate Stormwater System (MS4) NPDES Permit holder with a special “selected-NonDegradation” status that results in stringent requirements for stormwater discharge. Additionally, Lake Superior is a MCPA designated Outstanding Resource Value Water (ORVW) which requires additional stormwater discharge restrictions. Duluth is required to minimize impervious surface so as to reduce the total runoff volume load of storm water to the level that occurred prior to 1988. Duluth must also have specific methods to eliminate new and expanded (storm water) discharges

The current City of Duluth MS4 permit states that no "new or expanded" storm water discharge to Lake Superior should occur. This implies that all storm water runoff from newly installed impervious surfaces shall be fully contained on site and infiltrated whenever possible. When this is not possible, the developer must restrict discharges to the maximum extent possible (MEP). During planning, preliminary design and final design, the developer shall document in the drainage report what actions were taken to avoid, minimize and mitigate the volume of storm water discharged to the MEP level. Utilization of Low Impact Development methods shall be evaluated for all projects. The MPCA reserves the right to make the final determination of all prudent and feasible alternatives and determine whether the methods proposed are significant enough to preserve the high quality of the ORVW.

The pollutants specifically identified in the MS4 permit are total stormwater Volume (TVOL), total suspended solids (TSS), total phosphorus (TP) and temperature (T). Proposed Projects must go through certain steps, beginning with initial planning, and use the most aggressive standards feasible to restrict pollutant discharge. Methods to restrict discharge include; site planning to reduce the impervious footprint, utilizing Low Impact Development (LID) methods, designation of buffer areas/green spaces, and other methods and design approaches found in the Minnesota Stormwater Manual and other publications.

MPCA Industrial Stormwater Permit

If the project is within a facility that conducts industrial activities as identified by the MPCA under the MPCA NPDES Multi-Sector General Permit for Stormwater Discharges Associated with Industrial Activity, the industrial stormwater management plan (SWPPP) shall be submitted as part of the drainage report.

Stormwater Management Plans – Process

The following are the major steps in the process for getting approval of the stormwater management system for a project. Additional requirements for the steps listed are discussed later in this document. A permit fee schedule can be requested from the engineering department related to the items below.

1. Preliminary Design Submittal and Meeting: Stormwater management requirements for development and redevelopment projects must be reviewed in the early phases of design. A preliminary design submittal worksheet shall be completed and a meeting with the stormwater project engineer to discuss the project.
2. Drainage Report: A final drainage report with the proper format and content is required for all projects, and shall be submitted with the building permit application.
3. Erosion Control Plan: Projects shall complete a city Erosion and Sediment Control Permit per the UDC. A complete temporary stormwater management plan (SWPPP) shall be submitted to and approved by the stormwater project engineer. All sites will be inspected by the city and MPCA. A SWPPP and erosion control permit will need to be completed as part of the permit package.
4. MS4 Statement of Compliance (MS4 SOC): Upon approval of the temporary and permanent stormwater management plans (Drainage Report), a MS4 Statement of Compliance shall be drafted by the stormwater project engineer specific to the project, signed by the project's civil engineer and the owner. This will need to be completed prior to the issuance of any building permit(s).
5. Record Drawings: The design engineer shall provide record drawings of the constructed stormwater management system, and provide a statement that the system was constructed to the project construction plan and specifications. See this document for submittal requirements for as-built/record drawings, for both public and private.

6. Stormwater Management Facilities Operation and Maintenance Manual: A separate document to be submitted post-construction to the owner and the city.

Stormwater Management Design Approach

The UDC (Section 50-18) regulates the stormwater runoff from a development for the following discharge parameters: 1) discharge rate (Q), 2) runoff volume (TVOL), 3) total suspended solids (TSS), 4) total phosphorus (TP) and temperature (T). The maximum allowable discharge levels for these parameters will be determined by the combination of the pre-project site conditions and the proposed development. When the proposed development is a mix of redeveloping existing impervious area and adding new impervious area, the above parameters shall be weighted from the existing predevelopment/project site conditions to determine the allowable levels of discharge parameters leaving the proposed project site based on the UDC requirements. This shall be discussed at the preliminary design submittal meeting.

Typically development alters the drainage of an existing site due to improvements made and the need to collect, convey and treat/attenuate the stormwater runoff. The discharge of runoff from a proposed development shall not cause negative impacts to down gradient property owners, public infrastructure and natural drainage ways and creeks.

Stormwater management is a comprehensive system consisting of various BMPs to meet the requirements set forth in the UDC and this document. A development shall not only look at the specific project site but rather the larger context of the surrounding area and the project's impact on down gradient property, infrastructure and natural waterways and creeks and Lake Superior. A development should look at incorporating measures to retrofit existing stormwater infrastructure as redevelopment opportunities arise with BMPs that provide stormwater management controls.

Water Quality Controls: Water quality controls are required to remove sediment and phosphorus from stormwater runoff from improved property. The discharge of sediment into the community drainage system negatively impacts our natural drainage ways and creeks, requires maintenance on culverts and storm pipes and increases the potential for flooding due to reduced conveyance capacities. Phosphorus discharged in stormwater runoff negatively affects water quality by creating algae blooms, depleting dissolved oxygen levels, creating unpleasant odors and degrading fish and wildlife habitat.

Methods of water quality controls may include infiltration/bio-filtration basins, wet sedimentation ponds with forebays, sedimentation traps/cambers as part of a treatment train, bio-swales, Low Impact Development design methods and other demonstrable methods.

Runoff Rate Control: Runoff rate control is more critical and achievable in the upper, flatter part of the watershed above the escarpment. Below the escarpment, or bluff line, the topography is relatively steep and storm water flows quickly to Lake Superior and the St. Louis River. This bluff line designation is shown on the NRO Map. The storm water rate control requirements for development and redevelopment are shown in the UDC Table 50.18.10E-4. Changes to the runoff discharge location from the existing conditions will require analysis to verify that there are no negative impacts to down gradient properties or infrastructure.

Methods of runoff rate control may include; stormwater detention ponds, infiltration and bio-filtration basins with engineered freeboard, below grade storage systems, engineered swales and other demonstrable methods. All rate control BMPs shall have outlet control structures that minimize maintenance and are easily accessible for inspections. Hydraulic modeling of the outlet structure shall be performed for each of the required designed storm events.

Runoff Volume Control: Volume control's goal is to minimize the volume of stormwater runoff from a site, by matching the existing runoff characteristics of a site and thereby reducing volume and pollutants leaving a site and promoting ground water recharge. Volume control is challenging in the City of Duluth due to grades, soil type, and shallow groundwater and bedrock. A geotechnical soil investigation is required for a proposed project site to determine the viability of volume control BMPs. Field investigation shall be conducted at all location(s) where BMPs may be potentially installed as well as alternative locations, to ensure all options are reviewed to meet the UDC standards.

Methods of volume control may include; infiltration into the ground (which is the preferred method where feasible), evapotranspiration, storage/harvesting for reuse, green roofs, conservation designs, engineered/enhanced swales and filter strips, disconnection of impervious surfaces, and other demonstrable methods of volume reduction. All proposed pervious areas that are disturbed during construction shall include soil ripping/tilling/loosening prior to restoration to reverse soil compaction that occurs during construction activities. If volume controls are technically non-feasible, increased rate control / attenuation and water quality measures beyond the UDC standards are potential options to explore and shall be discussed at the preliminary design submittal meeting.

The following is an excerpt from the MPCA NPDES/SDS Permit Program for MS4s, Permit No:MNR040000 Part III.D.5.(3)(a) regarding infiltration prohibitions and limitations. If the proposed development meets a limitation listed below for the majority of the site, alternative volume reduction techniques shall be implemented.

> *(3) **Stormwater** management limitations and exceptions*
> *(a) Limitations*
>
> *1) The **permittee**'s Regulatory Mechanism(s) shall prohibit the use of infiltration techniques to achieve the conditions for post-construction **stormwater** management in Part III.D.5.a(2) when*

*the infiltration **structural stormwater BMP** will receive discharges from, or be constructed in areas:*

*a) Where industrial facilities are not authorized to infiltrate industrial **stormwater** under an **NPDES/SDS** Industrial **Stormwater** Permit issued by the **Agency***
b) Where vehicle fueling and maintenance occur
*c) With less than three (3) feet of separation distance from the bottom of the infiltration system to the elevation of the seasonally **saturated soil**s or the top of bedrock*
*d) Where high levels of contaminants in soil or groundwater will be mobilized by the infiltrating **stormwater***

*2) The **permittee**'s Regulatory Mechanism(s) shall restrict the use of infiltration techniques to achieve the conditions for post-construction **stormwater** management, without higher engineering review, sufficient to provide a functioning treatment system and prevent adverse impacts to groundwater, when the infiltration device will be constructed in areas:*

a) With predominately Hydrologic Soil Group D (clay) soils
*b) Within 1,000 feet up-gradient, or 100 feet down-gradient of **active karst** features*
c) Within a Drinking Water Supply Management Area (DWSMA) as defined in Minn. R. 4720.5100, subp. 13
d) Where soil infiltration rates are more than 8.3 inches per hour

*3) For linear projects where the lack of right-of-way precludes the installation of volume control practices that meet the conditions for post-construction **stormwater** management in Part.III.D.5.a(2), the **permittee**'s Regulatory Mechanism(s) may allow exceptions as described in Part III.D.5.a(3)(b). The **permittee**'s Regulatory Mechanism(s) shall ensure that a reasonable attempt be made to obtain right-of-way during the project planning process.*

*(b) Exceptions for **stormwater** discharge volume*
*The **permittee**'s Regulatory Mechanism(s) may allow for lesser volume control on the site of the original **construction activity** than that in Part III.D.5.a(2) only under the following circumstances:*
*1) The owner and/or operator of a **construction activity** is precluded from infiltrating **stormwater** through a designed system due to any of the infiltration related limitations described above, and*
*2) The owner and/or operator of the **construction activity** implements, to the **MEP**, volume reduction techniques, other than infiltration, (e.g., evapotranspiration, reuse/harvesting, conservation design, green roofs, etc.) on the site of the original **construction activity** that **reduce**s **stormwater** discharge volume, but may not meet the conditions for post-construction **stormwater** management in Part III.D.5.a(2).*

Runoff Temperature Controls: If the project location is within 1 mile of and discharges to a cold water trout stream as identified in the UDC, MPCA Special Waters search tool and/or the DNR database (data deli), the project must take measures to minimize the risk of increasing the temperature of the stormwater runoff from the site and negatively impacting the stream habitat.

Methods of reducing runoff temperature include; below grade attenuation/storage structures, infiltration, bioretention/filtration (sufficient filtration depth), disconnected impervious surfaces, pervious pavers, green roofs, shading from tree canopies, engineered/enhanced swales and filter strips, and other demonstrable methods of temperature reduction BMPs. These and other methods require proper design to function properly and should be discussed during the preliminary design meeting.

Design Rainfall Event

Rainfall events or runoff events within the City shall be defined as outlined below (NOAA Atlas 14):

a. The 2-year, NRCS Type II rainfall event is defined as 2.7" of rainfall in 24 hours.
b. The 10-year, NRCS Type II rainfall event is defined as 4.0" of rainfall over 24 hours.
c. The 100-year, NRCS Type II rainfall event is defined as 6.4" of rainfall over 24 hours.
d. The 100-year 10-day snowmelt is defined as 8.1" of runoff (frozen ground conditions).

Preliminary Design Submittal Worksheet and Meeting

A preliminary design submittal worksheet shall be prepared at the start of all projects during preliminary design and prior to platting. This worksheet is designed to provide initial project information to the city and alert engineers and developers of storm water requirements prior to the start of the project. A copy of this worksheet is included in Appendix I. The worksheet shall also be included in the drainage report. A meeting with the city engineer is required as part of the preliminary design, and no drainage report will be reviewed without first conducting this step. Non-local engineering consultants may conduct a tele-conference with the city engineer as long as Preliminary Design Submittal Worksheet and exhibits are complete and sent to the city engineer in advance.

Drainage Report

The drainage report is the required format for submitting the permanent stormwater management plan and analysis for all projects. Review will not start on partial or incomplete drainage reports. Drainage reports shall be submitted as part of a project plan review and/or building permit submittal. The drainage report shall follow the format and content requirements discussed below.

1. Coversheet for project/development with signature by an engineer registered in the state of Minnesota
2. Drainage report submittal checklist – see Appendix J
3. Table of contents with appendices listed
4. Introduction/Executive Summary

a. Describe the hydrologic and hydraulic methods and software used to analyze the site.
b. Describe the watershed the project is located in and its characteristics.
c. Provide a summary chart of pre and post project surface area types, runoff rates and volumes and the percentage change in each.
d. Provide a statement/conclusion on the project's performance in meeting the requirements of the UDC and the Engineering Guidelines.

5. Narrative of the project:
   a. Describing the type and scope of the project
   b. Estimated construction start and completion dates
   c. Project phasing and sequencing of construction activities
   d. Unique construction activities; rock blasting/removal, stream flow diversion, deep excavation and/or other construction activities.
6. Pre-Project Conditions
   a. Discuss size of site, existing impervious areas (size and type), existing pervious areas (size and type of vegetation)
   b. Discuss existing drainage characteristics, including runoff rates and volumes for each delineated sub-watershed/catchment areas on the project site. Discuss how the drainage is currently routed down gradient from the site onto adjacent properties and its routing to the receiving waters (streams, St Louis River or Lake Superior).
   c. Exhibits shall include pre-project topographic site maps showing delineated catchment areas with CNs and Tc, comprehensive flow arrows and routing, and surface area types. Plan/detail sheets shall be a 11 x 17 max. folded into and attached to the report.
7. Post-Project Conditions
   a. Discuss post-project impervious and pervious areas (size and type).
   b. Discuss the post-project drainage characteristics of the site as a result of the project
      - Changes to the catchment areas
      - Discharge rates and volumes
      - Changes to the discharge routing/location(s) and subsequent impacts to down-gradient properties, infrastructure and receiving waters
      - Capture and conveyance system for storm water runoff
      - Exhibits shall include post-project topographic site maps showing delineated catchment areas with CNs and Tc, and storm sewer infrastructure. Plan/detail sheets shall be 11 x 17 max. folded into and attached to the report.
   c. Discuss the permanent stormwater management system for the project as a cohesive singular system and its individual components to address the below control requirements.
      - Discuss the project's approach to utilizing Low Impact Design practices in meeting the permanent stormwater management goals.
      - Routing: Discuss the routing of stormwater runoff within the site for the design storms indicated and for larger events during frozen or clogged

conditions, i.e. overland flood routing. Discuss the percentage of runoff that is not routed to a BMP.

- Discharge Rate (Q): Discuss how discharge rate control requirements are met on the project.
- Volume Control (TVOL): Discuss the runoff volume control measures. What methods are being implemented to meet this requirement. Compare the pre and post-project condition in regard to runoff volume. Provide a soil exploration report with boring logs in the appendix.
- Water Quality (TSS, TP): Discuss how the water quality controls meet the requirements for total suspended solids and total phosphorus reduction and removal.
- Temperature (T): Discuss if the project is required to meet this control and if so how is it being met.
- Exhibits shall include site maps with proposed topography, locations of BMPs, flow arrows showing runoff going to each BMP and offsite, BMP details (cross sections, plan views, outlet details, access, contribution area, bottom elevation, live storage, dead storage, discharge rates for 2-year, 10-year, 100-year events, high water (HW) elevations from each event). Plan/detail sheets shall be 11 x 17 max. folded into and attached to the report. Include design worksheets/modeling printouts/calculations.

8. Storm Water Pollution Prevention Plan (SWPPP) / Erosion and Sediment Control Plan.
   a. The SWPPP / Erosion and Sediment Control Plan shall be included in the drainage report as an attachment, consisting of the plan sheets that are part of the final plan set.
   b. A SWPPP is required for all projects as defined in the UDC. An example of a SWPPP is included in Appendix K. The MPCA General Permit Authorization to Discharge Stormwater Associated with Construction Activity under the NPDES shall be reviewed for requirements and incorporated as required.
   c. All plans shall include but not limited to perimeter/sediment control, inlet protection for all inlets that may potentially receive runoff on the project site or within the ROW, vehicle tracking pad at the site access/exits and mulch/erosion control blankets to provide temporary stabilization as needed.
   d. The SWPPP is a dynamic document and shall be updated as the project proceeds. As site conditions change and contractor activities occur the SWPPP shall be updated to accurately document the erosion and sediment controls being used and which ones have been added, cleaned, repaired or removed. The requirement to update the SWPPP during construction activities shall be noted in the SWPPP.
   e. If the project scope, phasing or limits change from the approved SWPPP, the permittee shall amend and resubmit the plan for approval by the city engineer.
9. Stormwater Management Facilities Operation and Maintenance Manual shall be included in the drainage report. A final post-construction O&M manual will be

submitted after as-built information has been obtained and incorporated into the manual. The manual shall include the following content:

a. A summary of the permanent stormwater management system for the site and clearly describing ownership of the system.
b. A site plan showing the drainage patterns of the site, routing of stormwater runoff to the BMPs, and the location where stormwater runoff discharges from the site. Include the access points for inspection of the BMPs.
c. A description of the function of the BMPs, for each component and as a system.
d. A check lists for annual inspection and maintenance. The check list shall reference the site plan for key inspection points.
e. For structures to be owned and maintained by a Homeowners Association, submit a copy of that agreement with sufficient detail clearly delineating between City of Duluth and private ownership. Include Developers Agreement/MOU sections that pertain to storm/surface water.
f. This document will be considered preliminary prior to construction and should be included in the drainage report, and shall be finalized post-construction with as-built information to reflect any design changes made during construction.
g. The final stormwater management facilities operation and maintenance manual shall be submitted to the owner and the City after the project is complete. The project engineer shall inform and make the owner and/or developer aware of the responsibilities of operation and maintenance of the BMPs associated with the project.

MS4 Statement of Compliance

A MS4 Statement of Compliance will be completed by the stormwater project engineer for each project upon approval of the drainage report and permanent storm water management system plans. This document shall be signed by the owner and the design engineer and returned to city engineering with payment prior to the issuance of any permits. A copy of a generic MS4 Statement of Compliance is included in Appendix L. If any design changes need to be made during construction due to site conditions, these changes shall be approved by the city engineer and shall meet all requirements stated in the MS4 Statement of Compliance and the drainage report.

Storm Water Sewer/Conveyance Design Requirements

Design of storm water infrastructure shall meet the following minimum requirements:

1. Minimum grade shall be maintained to provide for a minimum velocity of three feet per second in storm drains (Reference MnDOT DM8.9.4). A target grade of at least 2% should be used for all catch basin leads.
2. Minimum pipe size shall meet the 10-year design requirement or as otherwise directed by the City Engineer.
3. Curb boxes shall not be installed on curb/gutters with continuous longitudinal grades.

4. Combination curb boxes and gutter inlets shall be used at sag points, both at the low point and at the flanking inlets if determined necessary. The engineer shall consider flanking inlets at critical points, especially where overtopping of curb may cause scour and property damage, and if road spread exceeds MnDOT design guidelines.
5. A catch basin inlet clogging factor of 50% shall be used for analysis.
6. At each Catch basin / inlet, design analysis shall determine the following: flow, spread, runby, and depth of flow in gutter. Runby flows should be minimized when the flow leaves the project site. Down gradient inlets and conveyance systems shall be analyzed to determine if sufficient capacity exists to receive the runby flow.
7. When gutter flow requires additional inlets (stacked – in series) due to spread/runby, the inlets shall be spaced a minimum separation distance of 20' center to center of grate.
8. The construction plans shall show overflow paths at all sags for curb overtopping. The plans shall also show the overflow/ flood flow routing and include **ALL** property owners along the overflow routing. Depth of potential ponding on the roadway shall be stated and may require additional review per MnDOT drainage standards. Proof of notification of potentially impacted property owners shall be submitted.
9. For ponds and outlets, show overflow path for all outlets. Include emergency outlet all the way to the major receiving system. The plan must identify **ALL** property owners and their parcels in the flood flow routing. Notification of potentially impacted property owners shall be provided.
10. Rip rap used in ditch sections shall meet MnDOT 3601 Riprap Material, noting 3601.2A.1(3) Crushed, non-weathered, not smooth or round.
11. Geotextile fabric shall be installed under all rip rap. Granular filter may be used under the fabric.
12. Precast concrete manholes and catch basins shall be used for all installations unless approved otherwise by the City Engineer. Catch basins shall not have a sump area.
13. Storm manholes shall have concentric cones and no steps.
14. Storm water pipe shall be reinforced concrete pipe (RCP) or CPP in accordance with the city construction specifications and a minimum of 12" in diameter. CPP should be used for all catch basin leads where adequate cover is available. CPP may be used for storm sewer mains on a case by case basis. Other pipe materials may be allowed with approval by the city engineer.
15. Storm sewer piping installed to collect and convey stormwater flow from individual parcels outside of the ROW may be SDR35 PVC.
16. The City of Duluth has numerous ordinances regarding storm water runoff and the protection of the area's water resources. Please refer to the Duluth, MN - Legislative Code, Chapter 43 Article XI Stormwater Utility System, Chapter 45 Division 2 – Improvements by Private Party and Article VIII – Obstructions to Watercourses, and Illicit Discharge, Chapter 50 Article II – Zone Districts
    http://library.municode.com/index.aspx?clientId=50009

VI. VACATION AND EASEMENT REQUIREMENTS

1. All projects requiring vacation of existing plats, right of ways or easements shall meet with the City Planning Division to accomplish the necessary vacations. The Planning Division will prepare all vacation documents for Planning Commission and City Council approval. No construction plans will be approved prior to vacation approvals.
2. The Developer will be required to obtain and/or dedicate any necessary easements. All easements shall be prepared by the Developer's Attorney and Registered Land Surveyor at the Developer's cost. Once approved by the Engineering Division, easements must be accepted by City Council and recorded. Recording shall be done by the City and all fees invoiced to the Developer. No construction plans will be approved prior to City Council approval of the easements.

VII. PLAN SUBMITTAL REQUIREMENTS

1. All project plans with infrastructure proposed to be owned by the city shall be submitted to Engineering for review and signature.
2. Plan and specification submittals to Engineering shall include only items to be turned over to the public, traffic control plans and all erosion control and storm water facilities (both public and private) including the SWPPP. Items not intended for review by Engineering should not be submitted; submitted items shall be indicated by a circle in the index of the title sheet.
3. All plan sets submitted to Engineering shall be 11 x 17 inches in size. No other sizes shall be accepted. Five copies of the review plans shall be submitted. One copy of the final set for signature shall be submitted. Email submittals will not be accepted.
4. All final plan sets shall have a title sheet. Minimum information required on the title sheet shall be the project name, year of construction, city project number, project location map, a listing of governing specifications, block containing the name and address of the designing consulting firm, signature blocks for City Engineer, Chief Engineer of Utilities, Chief Engineer of Transportation, a signature block for the engineer of record and a listing of the quality of underground information with Gopher State One Call number. An example title sheet for city projects is included in Appendix M. A copy of the AutoCAD template is available upon request.
5. Alignment sheet shall show station and offsets for centerline alignment, PC's, PT's, PI's, street intersections, control points, plat monuments, etc. Centerline (C/L) to C/L distance shall be indicated on alignment sheet and plan sheets, tied into intersecting streets at C/L even if intersecting street is not on project. This is used for city's pavement management database.
6. Charts shall include:
    a. Survey control point chart with coordinates and descriptions

   b. Alignment chart with coordinates, azimuths for alignments, coordinate and station and offsets for alignment points, coordinate and station and offsets for curve data
   c. Bench mark chart
7. When details from the city's *Standard Construction Specifications* are used and referred to in the plan, an illustration of the detail may or may not be required, as directed by the city engineer. The details referenced in the plan shall be, at a minimum listed in the plan. If a detail is included on the plan in its original form, then it shall include the City of Duluth's detail number. If the detail is modified in any way, the Duluth detail number shall not be included. Any modifications shall be clearly indicated in the construction notes, the plan, and in the special provisions.
8. All plan sets shall use the following AutoCAD standards:
   a. Minimum text size of 0.08"
   b. Minimum line weight of 0.1500mm.
9. The projected coordinate system used for all projects shall be the St. Louis County Transverse Mercator System 96:
   - Projection: Transverse_Mercator
   - False_Easting: 4757208.33333333
   - False_Northing: 3280833.33333333
   - Central_Meridian: -92.45000000
   - Scale_Factor: 0.99998529
   - Latitude_Of_Origin: 46.61666667
   - Linear Unit: Foot_US
   - Geoid: (Current)
10. Plan submittal shall include all CAD files used in the plan. Example: base files, sheet files, external references, images, shape files, line-type files, fonts, pipe network catalogs, custom subassemblies, ptp files. The City should be able to verify and review the design data of all custom entities. The City should not have any errors or warnings when opening these files. Include a pdf so the City can reprint exactly what the Engineer of Record intended the plan to look like.

VIII. CONSTRUCTION INSPECTION

All public improvements shall have on-site inspection as necessary to confirm that all work adheres to the city approved plans and specifications. Underground utilities shall be inspected on a full time basis. All inspectors shall be required to obtain and maintain the appropriate inspection certifications for the work they are responsible to inspect.

All materials to be used in the construction must be inspected by the Engineer prior to installation. No materials shall be placed until they have been inspected and approved.

IX. MATERIALS TESTING

The engineers will perform materials testing for acceptance and quality assurance on all projects. A schedule for materials testing is included in the City of Duluth Master Construction Specification. This schedule identifies the minimum amount of testing required. Based upon field observations, the Engineer shall increase the amount of testing required to ensure Contractor compliance with the specifications. The amount of testing shall not be reduced below the amount shown in the schedule.

X. SHOP DRAWINGS

The Engineer will review the shop drawings for compliance with the contract documents and current City standards. The Engineer will respond with comments (within 14 days of receipt of submittal) to the Contractor that the items submitted are either "reviewed" or "resubmit". The Engineer may consider work unacceptable and no payment will be made, if the shop drawing review is not completed for products incorporated into the work.

In addition, the Engineer will submit "reviewed" shop drawings for **all HDPE water main and fittings** to the Chief Engineer of Utilities for review. The Engineer and Contractor will schedule a time to meet on the construction site with the Chief Engineer of Utilities to inspect the materials furnished prior to use in the work. No HDPE water main work will be considered acceptable and no payment will be made without the completed shop drawing review and inspection of the Chief Engineer of Utilities.

XI. POST CONSTRUCTION SUBMITTALS

The City of Duluth, upon completion of a public project and/or projects requiring city maintenance or inspection requires that the following data be received, reviewed, and approved by the Engineering Division before permit of occupancy is granted. For City of Duluth projects, final payment for engineering services will be withheld until all final documents have been reviewed and approved. For private projects, acceptance of the street and/or utilities will be withheld until all final documents have been reviewed and approved.

<u>Required Post Construction Submittals, as applicable to the project</u>:

1. Paper documents:
   a. Record Drawings on 11X17 paper, signed by the Engineer of Record
   b. Letter recommending acceptance by the city and certifying that project is complete and installed to city standards, signed by the Engineer (if project is private or if specified in the MOU)

c. Letter confirming sanitary sewer mains (if present) were televised, have passed an air test and mandrel test and that all manholes have passed a vacuum test and are acceptable, signed by the Engineer.

2. On a CD:
   a. A pdf of the Record Drawing
   b. A pdf of the Original plan with signatures (if not bid by the City)
   c. A pdf of the Shop drawings
   d. CAD files for COMPLETE plan set in .dwg format (see XI.A.1. for requirements)
   e. Plan Specifications created and submitted in Microsoft Word
   f. Special Provisions, created and submitted in Microsoft Word
   g. PDF copies of Pay Estimates
   h. PDF copies of Change Orders
   i. CSV files of all surveyed shots, including list of point codes and equipment used (see section XI.B for required features)
   j. PDF files of inspector field notes, survey field notes, and monument ties
   k. Utility Installation/Modify Documents (Excel version available upon request)
      - Water main check-off list (Appendix N)
      - Valve installation record (Appendix O)
      - Hydrant installation record (Appendix O)
      - Water service installation records (Appendix O)
      - Sanitary Sewer Wye Record (Appendix P)
   l. A pdf copy of Fusion Logs
   m. PDF's of Materials Testing Reports
   n. PDF's of the Erosion Control Inspection Reports
   o. All construction /inspection photos on a CD
   p. PDF copies of IRA's for State Aid jobs, if paper forms were used
   q. A pdf of ADA pedestrian ramp forms, for State & Federally funded projects (form can be found at *www.dot.state.mn.us/ada/pdf/PDFCurbRampForm.pdf*)
   r. A pdf of ADA form for traffic signals, for State & Federally funded projects (form can be found at *www.dot.state.mn.us/ada/pdf/PDFAPSForm.pdf*)
   s. A pdf of the Stormwater Management Facilities Operation and Maintenance Manual for BMP's (see section XI. A.3. for requirements)

3. All post construction submittals shall be delivered to Peggy Billings, Engineering Technician, in the Engineering Division. Refer questions to *pbillings@duluthmn.com*

A. Record Drawings

For all projects, prepare complete record drawings whether there were any changes from the "as let" plan or not.

1. <u>Record Drawing Requirements</u>

   a. The original/record drawing plan will be on 11"x17". All pertinent signatures shall be on the original plan. The record drawing shall be signed by the Engineer.

b. CAD files in .dwg format should be submitted in the current Autodesk Civil 3D version used by the City of Duluth, unless prior arrangements have been made.
c. All corrections will be on record drawing layers. All cross-reference/X-ref drawings, non-standard fonts, catalogs/libraries, and shape files will be part of the electronic copy.
d. Survey data shall adhere to standards found in SURVEY REQUIREMENTS (Section XII)
e. The words “Record Drawing” and the date, in red upper-case letters, must be centered in the top margin of the title sheet and at least ¼” high and must be included on all plan sheets.
f. General sheet changes shall be in red. Line out or cross out all changed original information so it is still readable. Write the corrected information above the original or close to it where possible.
g. Plan view sheet changes:
    1) All changes must be shown and labeled in red. For example:
        - Changes in grade or elevations for footings, culverts, manholes
        - Relocated private drives
        - Sidewalks (new, added, or removed)
        - Changes in size, location, or alignment of pipes. For unusual situations like unexpected angles for pipe fittings, show details and supply labeled photos on the record drawing.
    2) Pre-construction and post-construction conditions must be shown; proposed changes need not be shown.
    3) Drawings shall contain:
        - Stationing and offsets for centerline and sawed X’s (see section XII.5.)
        - Centerline dimension of street to right-of-way line and intersecting streets and right-of-way
        - Sub-cut areas, rock profiles, insulation of utilities
        - Other utilities and underground structures (e.g. vaults) within the right of way, including abandoned or discovered utilities and private utilities. This includes fiber optics.
        - Omissions, errors, and discrepancies discovered during construction
        - Features added, revised, or deleted by contract change orders
        - Changes in drainage and altered watercourses; any additional perforated pipe and/or french drains
        - Material type, size and manufacturer where optional materials are allowed by specifications or approved field changes
        - Final pipe dimensions, details, sizes, material, numbers, locations, quantities, length, grades, and inverts elevations, if different from the original plan. Elevations for storm and sanitary items shall be shown on the record drawings.
        - Plat monuments inplace, placed or replaced. All changes in control points. Corrected or replaced permanent bench marks. Final dimensions, alignments, elevations. Show ties to monuments.

h. Profile view sheet changes:
    1) Labels should be modified to reflect post construction conditions.
    2) Pre-construction and post-construction conditions must be shown; proposed changes need not be shown.
i. If the plan has no changes, indicate such by the words “NO PLAN CHANGES” on the title sheet. If individual sheets within a record drawing have no changes, indicate such by the words “NO SHEET CHANGES”.
j. If the charts have no changes, indicate such using the words “NOT UPDATED” on the charts.
k. The title sheet shall reflect the sheets that have been modified by adding (in red) a note to the index.

2. Structural Plans – Record Drawing Requirements

Include the following items on the title and detail plan sheets as applicable. This listing should be considered as a base and can be revised to meet individual project needs.

a. Record drawings for structural plans will be full size (up to 24”x 36”).
b. Corrected or new bench mark disk locations and elevations.
c. Added or relocated utilities. Locate on the plan sheet and on the detail sheet if hanging from the superstructure.
d. Changes in piling type and length. Note the range in length (shortest to longest) on the plan view of each substructure unit.
e. Added or relocated piles, location, type and length.
f. Expansion joint types where options are allowed. Indicate the size and manufacturer. Cross-out reference to joint type not used.
g. Revisions, additions and deletions per contract change order.
h. Final dimensions, alignments, elevations, detail sizes, lengths, numbers, and locations if changed from the plans.
i. Controlling vertical clearances.
j. Plain and protective surface treatment color, type and manufacturer.
k. Size of riprap or other countermeasures to counter erosion/scour.
l. Underwater problems encountered that may reoccur.
m. Top of water elevation together with date taken.
n. Vulnerability to scour code obtained from bridge designer.
o. Profiles and cross sections of stream bed upstream and downstream.
p. Angle of water attack relative to pier of abutment line.

3. Stormwater Management Facilities (BMPs) Operation and Maintenance Manual

For all BMP’s, public and private, provide as-built information for Stormwater Infrastructure and verification that the as-built condition meets or exceeds the designed capacity/function of the stormwater management facility as developed for the Drainage Report and construction plans. Stormwater BMPs are site specific and vary in design and may be comprised of many components. As-built information shall be collected using survey grade instruments and shall include a full topographic survey of all components of a BMP and

pertinent features including but not limited to the below items. See Utilities Requirements, Storm Water (section V.D.) for more information regarding storm water design requirements.

Required Post Construction Submittals for BMP's:

a. Paper documents:
    1. Record Drawings
    2. Statement that the system was constructed to the project construction plan and specifications, signed by the Engineer

b. On a CD:
    1. Record Drawing pdf
    2. Shop drawings pdf
    3. CAD files
    4. CSV file
    5. Copies of field notes and survey notes
    6. Drainage report (if modified)
    7. Photos
    8. O & M Manual

Requirements for Stormwater Management Record Drawings

a. Ponds: Wet Sedimentation
    1. Elevations/areas/volumes: bottom of pond, NWL, EOF and top of perimeter berm (entire length).
    2. Forebay areas: bottom invert, NWL, overflow elevation
b. Underground Detention
    1. Elevations/areas/volumes: bottom of system: structure, rock bed.
    2. Inverts of structure, pipes (size/type), sub-drains (size/type), inlets and outlets of system.
    3. Shop drawings.
c. Filtration/Infiltration Basins
    1. Elevations/areas/volumes: top of berm (entire length), EOF, top and bottom of filtration media.
    2. Inverts of structure, pipes (size/type), sub-drains (size/type), inlets and outlets of system.
d. Water Quality Units and Pretreatment Structures
    1. Brand: size/model, manufacture/design schematics.
    2. Structure: inverts in/out, invert/diameter/configuration of orifices, weirs or other flow control devices, invert of structure, top of casting(s).
    3. Shop Drawings
e. Outlet Control Structures and Diversion Manholes
    1. Inverts in/out, invert/diameter/configuration of orifices, weirs or other flow control devices, invert of structure, top of casting(s).
    2. Structure size and depth.
    3. Shop drawings.

f. Conveyance of Stormwater Management System (up/down gradient of BMPs)
   1. Pipes: size, material type, slope.
   2. Manhole/Catchbasin: top of casting elevation, inverts in/out, structure size/depth.
   3. Swales/Ditches: width, shape, slope, restoration/finish surface (riprap, TRM, grass…), ditch checks/other energy dissipation BMPs (type, height, spacing, material).
   4. Site grading to verify that run-off is conveyed as planned.

B. Electronic Data Submittal

In addition to the record drawings required above, the engineer shall furnish digital comma separated value (CSV) files for all projects with public improvements to provide location data for the following features:

a. Sanitary manholes, sanitary wye connections, sanitary service bend fittings, sanitary service end caps and extensions, sanitary sewer couplings, the sanitary sewer pipe alignment, and tracer wire boxes.
b. Storm manholes, catch basins, storm aprons, storm culvert ends, storm water treatment BMP boundaries, private service connections, and storm pipe alignments.
c. Water main valves, water hydrant valves, water hydrants, water end caps, water pipe fittings, water service connections, water service valves, electrofusion couplings and the water main pipe alignment.
d. Gas main valves, gas service valves, gas tees, excess flow valves and the gas main/service alignment (include elevation).
e. Infiltration and inflow pipes, private service connections, service bend fittings, service end caps, and service extensions.
f. Alignment points including centerline, control points, sawed X's, and monuments.
g. At this time, elevation data within the CSV file is only required on natural gas related items.

The CSV files will provide field names along the top row that include feature name, northing, easting, elevation (natural gas only), and date coordinates captured. The dataset shall be in the coordinate system specified under plan submittal requirements. All coordinates within the CSV files shall be collected during and following construction and reflect the actual installed conditions.

XII. SURVEY REQUIREMENTS

The City of Duluth has established the following minimum requirements for survey data for the professional engineer and the developer to follow during the development, design, construction, and record drawing submittal for their project. The City of Duluth's Engineering Division shall receive all original survey field notes, including all monument ties.

1. Utilities

   a. The horizontal accuracy of coordinates for buried items shall be within 1.0 foot.
   b. The horizontal accuracy of coordinates for exposed or above grade items that may be collected as part of the record drawing survey shall be within 0.1 foot.
   c. Vertical elevations items other than storm or sanitary sewer related objects shall be within 0.2 feet.
   d. Storm and sanitary sewer invert elevations shall be within 0.05 feet.

2. Horizontal Control Points

   a. Use St. Louis County / Transverse Mercator 96 - NAD 83, in U.S. Survey Feet with no more than 0.05 Ft. accuracy used for setting control, alignment control, sawed X's, and monuments.
   b. Control Points shall be tied to minimum of two "HARN" monuments. (HARN monuments are available from St. Louis County and MnDOT.)
   c. Control points shall be placed so that pairs of points are visible from one another.
   d. Post Construction control points (sawed X's, see Final Record) shall be placed after project completion, for future reference.

3. Bench Marks

   a. Vertical Datum shall be NAVD 88 Datum with at least 0.01 Ft. accuracy.
   b. Verify elevations by tying into two (when practical, 1 minimum) USGS Bench Marks that have been adjusted to NAVD 88 Datum.
   c. Close bench circuits to assure accuracy.
   d. Permanent bench marks should be set at every intersection and indicated on plans. Spikes in poles, tops of hydrants, spikes in trees, etc. are all examples.

4. Monuments

   a. Reference "Survey Monumentation Preservation" memorandum dated October 31, 2001, and Minnesota statutes including but not limited to section 160.15 and section 505.02.
   b. All existing plat monumentation, used or impacted by the project, must be researched, field verified, maintained, tied out, and replaced if destroyed.
   c. Plat monuments shall be used to establish location of right-of-way, easements, roadway center lines, etc.
   d. Roadways shall be tied to existing plat monumentation and be centered on the right-of-way. Exceptions must be approved by the City Engineer.
   e. When survey monuments are required by the City, the City shall supply castings, the cost of which shall be deducted from the developer's deposit. The Developer's surveyor shall set the monument. Refer to the *City of*

Duluth Standard Construction Specifications for Duluth Standard Detail Sur 1, Survey Monument Installation.

f. Notify appropriate governmental agency (County, MnDOT, USGS, etc.) of changes and or additions.
g. By Minnesota statute, government corner monuments are to have certificate filed with County Land Surveyor's office; St. Louis County Land Surveyor's office will also accept certificates on plat monuments.

5. Final Project Control

Final project control shall consist of sawed X's placed on top of the curb on both sides of the street to re-establish the alignment after construction. The X's must be placed by the Developer or Consultant's surveyor within one week after the curbs are placed. The X's must be set before the Record Drawings are submitted.

a. Sawed X's, about 3" x 3", shall be placed on the top of curb near the PC and PT of the intersections. The X's shall be placed on both sides of the street on a stable part of the tangent curb close to the PC or PT at an even +05, +10, or +20 etc. station. Label the station and offset on the curb with white spray paint. Example: 12+05 12.5' CL, where the sawed X is the + of the station.
b. The X's must be placed on tangents near the beginning and end of every block at an even foot stationing LT and RT. Sawed X's must also be placed at all horizontal PC and PT of the roadway centerline.
c. The offset of the X's should be at an even offset from centerline and land on top of the curb. Example: 14.67' from centerline to back of curb, put the sawed X at 14.5'. Label the station and offset on the curb with white spray paint and shoot x, y, z of the sawed X's to submit with final records.

XIII. MISCELLANEOUS REQUIREMENTS

A. City Expenses

For all private projects, the city shall invoice the developer for all city costs associated with the public improvements, including, but not limited to, costs associated with plan review, construction inspection by city personnel, testing, including televising of underground utilities, survey monuments, and the review and acceptance of the public utilities.

The city may require within the Memorandum of Understanding that the developer tender a deposit with the city against which the developer authorizes the city to draw for payment for city expenses. The amount of this deposit and determination of the need for a MOU will be decided on a project specific basis. A typical MOU is provided in Appendix A.

B. Warranty

All privately constructed projects shall have a warranty for a period of two (2) years for all public improvements turned over to the city. Such warranty shall include, but not be limited to, repairs or corrective action due to improper construction or compaction. The warranty period shall commence upon acceptance of the project by the City Engineer.

APPENDIX A
Example: Memorandum of Understanding (MOU)

MEMORANDUM OF UNDERSTANDING
between
City Engineer for the City of Duluth, MN
and
DEVELOPER
relative to
NAME OF DEVELOPMENT, Duluth, Minnesota

This will serve as a Memorandum of Understanding between the City Engineer ("City Engineer") of the City of Duluth, Minnesota ("City") and NAME OF DEVELOPER ("Developer") and will document specific understandings of both parties relative to the construction of public and private improvements associated with the development of the NAME OF PROPERTY project within the City of Duluth, Minnesota. The public and private improvements, herein after referred to as the "Development" are shown on the attached Exhibit A. (ATTACH AN EXHIBIT THAT DEFINES WHAT IS PRIVATE)

Whereas, the Developer – as part of the Development – intends to proceed with the design and construction of public improvements at no cost to the City (City Project No. ????) and which improvements, upon completion of construction, will be turned over to the City for ownership, operation, and maintenance, and

Whereas, the City Engineer, in his or her capacity as city engineer for the City, has the authority to require that the public improvements constructed by a developer, which are to be turned over to the City and for which the City is to assume responsibility for maintenance and operation, be constructed in accordance with applicable City standards as determined by the City Engineer in the exercise of his or her discretion; and

Whereas, when such public improvements are so constructed, the City Engineer has the authority, in the exercise of his or her discretion, to accept such improvements and to undertake to have them maintained and operated by the City; and

Whereas, the Developer – as part of the Development – intends to proceed with the design and construction of private improvement at no cost to the City which improvements upon completion of construction will be turned over to (INSERT WHO WILL OWN OPERATE AND MAINTAIN) for ownership, operation and maintenance, and

Whereas, both the City Engineer and the Developer wish to memorialize various understandings relative to the public improvements for the Development.

Now, therefore, as indicated by signatures of appropriate representatives for both parties on this Memorandum of Understanding, it is jointly understood that:

1. The Developer intends to construct the public improvements within the Development privately and intends to turn over these improvements to the City of Duluth upon construction completion and acceptance by the City. The Developer agrees to dedicate any necessary utility easements and access rights of way within the Development to the City prior to the construction of the utilities and prior to the City's acceptance of those utilities.

2. The Developer intends to construct private improvements within the Development which will remain private following construction, and (define who will be responsible – Developer, homeowners association, common interest community) will be responsible for the ownership, operation, and maintenance of those improvements. (Define the requirements of the Home Owners Association or Common Interest Community here. Home Owners Association or Common Interest Community is to be formed as a "Master Association" which is governed by a document called "Master Declarations". The MOU must be completed before the Master Declaration is completed so that the two match.)

3. The design of all public improvements covered by this agreement shall conform to the most current edition of the Engineering Guidelines for Professional Engineering Services and Developments as approved by the City Engineer and on file in the office of the City Engineer. All public improvements shall have been approved in writing by the City Engineer prior to the commencement of the construction, thereof. Thereafter, any changes in said plans, other than standard field modifications, shall be similarly approved.

4. The construction of all public improvements covered by this agreement shall conform to the most current edition of the Engineering Guidelines for Professional Engineering Services and Developments as approved by the City Engineer and on file in the office of the City Engineer. All construction of the public improvements will be inspected on a full time basis by the engineering consultant. The Developer shall require by contract that its engineering consultant deem the City Engineer and the City to have the status of a "client" of such consultant for purposes of the work performed by such consultant related to the Development, and particularly as such status reflects on the consultant's duties to provide accurate and timely information and reports to their clients on the progress of such work and problems related thereto, all in accordance with professional standards common to the profession within the area. It is currently understood by both parties that (NAME OF ENGINEERING FIRM) will serve as the Developers engineering consultant for the design and construction of the public improvements.

5. Prior to the City Engineer's approval of the plans and specifications for the public improvements, the Developer will tender a deposit of ???? (DEFINE AMOUNT – typically 20% of construction cost), against which the Developer authorizes the City to draw for payment of City costs associated with the public improvements, including, but not limited to, costs associated with plan review, construction inspection by city personnel, testing, including televising of underground utilities, and the review and acceptance of the public utilities. In addition, the Developer understands that the deposit may be used to correct work not performed or work requiring corrective action whether or not such work is warranted as provided for in Paragraph 15 below or not, if the Developer's contractor fails to complete the work to city standards or to correct defects in such work in accordance with the requirements of this Agreement.

6. (DELETE THIS IF NO SANITARY SEWER IS BEING CONSTRUCTED) As part of the public improvements, the Developer will construct sanitary sewer mains with sufficient capacity, as determined by the City Engineer, to receive all sanitary sewer flows anticipated to be required for any and all future development as is currently known or expected to occur within the area which would be served by such utilities as determined by the City Engineer. In addition, the Developer will meet the conditions of the sanitary sewer system extension permit from the Minnesota Pollution Agency (MPCA) as required for the Development.

7. (DELETE THIS IF NO WATER MAIN IS BEING CONSTRUCTED) As part of the public improvements, the Developer will construct water mains with sufficient capacity, as determined by the City Engineer, to provide adequate flow of water for any and all future development as is currently known or expected to occur within the area which would be served by such utilities as determined by the City Engineer.

8. Prior to the issuance of individual building permits for a residential development or the Certificate of Occupancy for a commercial building, the Developer's engineer shall furnish record drawings prepared in accordance with City of Duluth Engineering Guidelines. These drawings shall indicate all changes made during construction. In addition to the record drawings, the Developer's engineer shall furnish digital comma delineated file (CSV) files to provide location data for the following features:
   - Sanitary manholes, sanitary wye connections, sanitary service bend fittings, sanitary service end caps and extensions, sanitary sewer couplings, the sanitary sewer pipe alignment, and tracer wire boxes.
   - Storm manholes, catch basins, storm aprons, storm culvert ends, storm water treatment BMP boundaries, private service connections, and storm pipe alignments.

- Water main valves, water hydrant valves, water hydrants, water end caps, water pipe fittings, water service connections, water service valves, electrofusion couplings and the water main pipe alignment.
- Gas main valves, gas service valves, gas tees, excess flow valves and the gas main/service alignment (include elevation).
- Infiltration and inflow pipes, private service connections, service bend fittings, service end caps, and service extensions.
- Alignment points including centerline, control points, sawed X's, and monuments.
- At this time, elevation data within the CSV file is only required on natural gas related items.

The CSV files will provide field names along the top row that include Feature Name, Northing, Easting, Elevation or Depth, and Date coordinates captured. The dataset shall be in the following coordinate system:

Projected Coordinate System: St Louis County Transverse Mercator System 96
Projection: Transverse_Mercator
False_Easting: 4757208.33333333
False_Northing: 3280833.33333333
Central_Meridian: -92.45000000
Scale_Factor: 0.99998529
Latitude_Of_Origin: 46.61666667
Linear Unit: Foot_US
Geoid: (Current)

All coordinates within the CSV files shall be collected during and following construction and reflect the actual installed conditions. Survey data shall adhere to the following standards:

- The horizontal accuracy of coordinates for buried items shall be within 1.0 foot.
- The horizontal accuracy of coordinates for exposed or above grade items that may be collected as part of the record drawing survey shall be within 0.1 foot.
- Vertical elevations items other than storm or sanitary sewer related objects shall be within 0.2 feet.
- Storm and sanitary sewer invert elevations shall be within 0.05 feet.

9. ARE THERE ANY STORM WATER IMPROVEMENTS THAT NEED TO BE MAINTAINED IN THE FUTURE BY THE DEVELPER OR THE HOA? As part of the private improvements, the Developer will construct a storm water system including permanent storm water quality improvements. The storm water system will have sufficient capacity to receive all storm water flows for any and all future development as

is currently known or expected to occur tributary to the project area. Developer agrees to forever maintain and repair as necessary the permanent storm water improvements to be constructed as a partial requirement of the MPCA NPDES Stormwater permit and the City of Duluth Municipal Separate Storm Sewer System (MS4) Stormwater Permit. Changes to the storm water improvement construction or operation must be reviewed and approved by the City Engineer. All work to be performed by the Developer under this paragraph, including work or modifications carried out at the request or direction of the City, shall be paid for solely by the Developer and its successors in interest, if any, and at no cost to the City. The installation of all private water quality structures on this project shall be inspected on a full time basis similar to public improvements and the engineering consultant shall certify the installation to the City Engineer. Record drawings will be provided for all private water quality structures.

10. The Developer will give formal notice to the City Engineer upon completion of the public utility improvements via certification by the Developer's engineering consultant that the public improvements have been constructed in complete accordance with applicable City engineering standards, as well as the approved plans and specifications. Upon receiving such notice/certification and record drawings, the City Engineer will inspect the public improvements. If the public improvements are in conformance with the applicable requirements, the City Engineer will direct that the City will assume ownership, operation and maintenance of them. If the public improvements are not in conformance with the applicable requirements, the City Engineer will provide formal notice to the Developer of the need for repair or replacement before the City assumes ownership, operation, and maintenance of them.

11. Until such time as ownership, operation, and maintenance of the public improvements is formally accepted in writing by the City Engineer, their operation and maintenance will be solely the responsibility of the Developer. This includes locating of pipes in accordance with the requirements of the Gopher State One Call System and plowing of snow for new City Streets.

12. Future repairs of public utilities will be completed by the City or their designated contractor. Following excavation for any utility repair on private property, the Developer is responsible for final surface restoration.

13. The Developer hereby agrees that it will defend, indemnify and hold harmless the City, the City Engineer and all other officers, agents, servants, employees and contractors of the City from and against any and all liability arising in any way out of the design and construction of the Development and, upon ten (10) days notice from any such party will appear and defend such party against any action of any kind arising out of this obligation.

Provided, however, that nothing herein shall be deemed to require the Developer to defend, indemnify or hold harmless any such party from Liability arising out of such party's active or intentional negligence or intentional acts; provided, however, that such obligation shall not apply to such liability arising from the ownership, operation and maintenance of the improvements as undertaken by the City.

14. The Developer agrees that it will require that the City Engineer and the City be named as additional insured on all insurance policies required by the Developer from its engineering consultant as referred to in Paragraph 3 above and from all contractors providing services to the Development and will require that certificates of insurance be promptly furnished to the City Engineer evidencing such coverage.

15. The Developer agrees to warranty the streets and utilities that are turned over to the City for ownership for a period of two (2) years after acceptance by the City Engineer. Such warranty shall include, but not be limited to, repairs or collective action due to improper construction or compaction.

16. Although the City Engineer has the authority to review and approve various plans and specifications for the improvements to be constructed as part of the Development, the City Engineer is not to be considered the project engineer for the purposes of the design or construction of the Development's streets and utilities, and the approval of the City Engineer of the design or construction or both of said streets and utilities shall not be a guaranty of the sufficiency or quality of said streets or utilities or of their compliance with codes applicable to such work. The City Engineer shall not be responsible for any errors or omissions of any kind whatsoever related to the design or construction of such improvements or any damages arising therefrom including consequential damages, whether to the Developer, to its engineering consultant or to any third party. The Developer agrees that, as between itself and the City and the City Engineer, it shall be solely responsible for any liability arising out of the design and construction of such improvements.

17. The Developer agrees to make repairs to public streets that may become damaged due to use of the road for hauling of materials, or due to the contractor's construction practices. The Developer shall repair such damage in a manner as so that it is acceptable by the City Engineer. Any pavement repairs shall be completed prior to final acceptance of any public improvements.

18. This Memorandum of Understanding may be executed in two or more counterparts, each of which shall be deemed an original, but all of which together shall constitute one and the same instrument.

City Engineer of Duluth, Minnesota

Cindy Voigt, P.E.
City Engineer

Date: _____

Developer

Name
title

Date: _____

Engineering Consultant

name
title

Date: _____

APPENDIX B
Application to Make Public Improvements Privately

APPENDIX B
Application to Make Public Improvements Privately

Application Number _____ Date _____
Project Number _____

City of Duluth Engineering Division
Application to Make Public Improvements Privately

Application is hereby made to (describe proposed improvements):

I/we hereby agree to do all work relating to the above described project in accordance with the plans and specifications approved by the city engineer.

I/we agree to pay all city costs incurred on the project in accordance with Chapter 45, Article VII of the Duluth City Code and amendments thereto.

I/we hereby tender a deposit of (AS PER MOU, IF APPLICABLE) _____, against which I/we authorize the city to draw for payments of such costs. I/we further understand that this deposit is not guaranteed to be the actual costs and agree to reimburse the city for such additional costs if such costs should exceed this deposit. The city agrees to refund any excess upon completion and acceptance of said work.

Upon completion to the satisfaction of the city engineer, I/we hereby ask the city to accept the above described project as a public improvement.

Name of Applicant(s)	Signature	Address	Date

* *

Permit for Public Improvements Made Privately
Permit Number _____ Date _____

This is to certify that _____ (contractor) has been granted permission to make public improvements as described above in accordance with Chapter 45, Article VII of the Duluth City Code and amendments thereto and agrees to complete this project on or before _____(date).

____ copy to project file (initial)

_____
Permittee (contractor)

____ copy to insurance file (initial)

_____
Approved by City of Duluth

APPENDIX C
Street Extensions Standards for Limited Residential Development Matrix & Standard Termini

City of Duluth
Policy on Street Extensions for Limited Residential Development
(as adopted by the Special Assessment Board on March 11, 2003)

Introduction

In recent years, the City has received various requests from property owners and/or developers to allow for the limited extension of existing streets to serve one or more "to-be-developed" residential lots. Typically, these "developments" include 1-4 lots or more that are proposed to be developed along an extension of an existing street. In many cases, the existing street is "under-constructed" (i.e., does not meet City standards) for some existing length, with a surface that may consist of dirt, gravel, or perhaps minimal bituminous.

In 2000, the City's Special Assessment Board approved and adopted a "Policy on real estate development where the lot to be developed has no street frontage or insufficient street frontage". While this Policy does in part address the petition and construction of streets "for their street frontage", it does not specifically address the nature and/or condition of the existing street to be extended.

Also in 2000, the City's Planning Commission amended the City's "Local Street Design Standards" to require that the minimum standard cross-section for a new residential street be a 28-foot wide bituminous surface with concrete curb and gutter. While these Standards do provide a formal variance procedure to allow for narrower streets, they do not specifically address improvements required to an existing street segment serving as the connection to the proposed new street extension.

Consequently, and with the above-noted information as background, City Engineering Division staff developed a policy that would reasonably address the required level of improvements to both (a) an existing street that will serve as a connection to a proposed street extension and is currently not constructed to City standards, and (b) the proposed street extension itself.

Based on recent experience, six general categories of streets that would be involved were identified. They are:

1. Street of minimal length (< 300 feet) that will be extended 100 feet or less.
2. Street of minimal length (< 300 feet) that will be extended 100 to 300 feet.
3. Street of minimal length (< 300 feet) that will be extended more than 300 feet.
4. Street of significant length (> 300 feet) that will be extended 100 feet or less.
5. Street of significant length (> 300 feet) that will be extended 100 to 300 feet.
6. Street of significant length (> 300 feet) that will be extended more than 300 feet.

Policy Provisions

Following are the policies that apply to each general category identified above.

Note that in all cases, the policies represent minimum requirements, and in no case shall the extended street be constructed to a standard less than the existing street.

1. Street of minimal length (< 300 feet) that will be extended 100 feet or less.

   Existing street: The existing street shall consist of a graveled surface constructed to a minimum depth of 6" and a minimum width of 20 feet. If the existing street is disturbed due to utility extensions associated with the street extension, it shall be reconstructed to City of Duluth standards for a graveled street – including Type 5 geotextile fabric and 12" of Class 5 granular base (24 feet wide). Costs to improve or reconstruct the existing street to these minimum requirements shall be the responsibility of the developer.

   Extended street: The extended street shall be constructed to City of Duluth standards for a graveled street – including Type 5 geotextile fabric and 12" of Class 5 granular base (24 feet wide); or to standards matching the existing street if greater. Appropriate street drainage (to be approved by City Engineering prior to construction) shall be provided. Costs to construct the extended street shall be the responsibility of the developer.

2. Street of minimal length (< 300 feet) that will be extended 100 to 300 feet.

   Existing street: The existing street shall consist of a graveled surface constructed to a minimum depth of 6" and a minimum width of 20 feet. If the existing street is disturbed due to utility extensions associated with the street extension, it shall be reconstructed to City of Duluth standards for a graveled street – including Type 5 geotextile fabric and 12" of Class 5 granular base (24 feet wide). Costs to improve or reconstruct the existing street to these minimum requirements shall be the responsibility of the developer.

   Extended street: The extended street shall be constructed to City of Duluth standards for a rural bituminous street – including Type 5 geotextile fabric, 12" of Class 5 granular base (24 feet wide), and 3" of bituminous surfacing (22 feet wide); or to standards matching the existing street if greater. Appropriate street drainage (to be approved by City Engineering prior to construction) shall be provided. Costs to construct the extended street shall be the responsibility of the developer.

3. Street of minimal length (< 300 feet) that will be extended more than 300 feet.

Existing street: The existing street shall be reconstructed to City of Duluth standards for an urban bituminous street – including Type 5 geotextile fabric, 12" of granular backfill material, 8½" of Class 5 granular base (28 feet wide), 3½" of bituminous surfacing (28 feet wide) and concrete curb & gutter. Costs to improve the existing street to these minimum requirements shall be shared by the developer and adjacent property owners per the City's Code provisions regarding "Local Improvements" (Article VII).

Extended street: The extended street shall be constructed to City of Duluth standards for an urban bituminous street – including Type 5 geotextile fabric, 12" of granular backfill material, 8½" of Class 5 granular base (28 feet wide), 3½" of bituminous surfacing (28 feet wide) and concrete curb & gutter. Costs to construct the extended street to these minimum requirements shall be shared by the developer and adjacent property owners per the City's Code provisions regarding "Local Improvements" (Article VII).

4. Street of significant length (> 300 feet) that will be extended 100 feet or less.

Existing street: The existing street shall consist of a graveled surface constructed to a minimum depth of 6" and a minimum width of 20 feet. For purposes of this policy, it is assumed that the existing street will meet these minimum requirements. If it does not, costs to improve the existing street to these minimum requirements shall be the responsibility of the City. However, if the existing street is disturbed due to utility extensions associated with the street extension, it shall be reconstructed to City of Duluth standards for a graveled street – including Type 5 geotextile fabric and 12" of Class 5 granular base (24 feet wide). Costs to reconstruct the existing street shall be the responsibility of the developer.

Extended street: The extended street shall be constructed to City of Duluth standards for a graveled street – including Type 5 geotextile fabric and 12" of Class 5 granular base (24 feet wide); or to standards matching the existing street if greater. Appropriate street drainage (to be approved by City Engineering prior to construction) shall be provided. Costs to construct the extended street shall be the responsibility of the developer.

5. Street of significant length (> 300 feet) that will be extended 100 to 300 feet.

Existing street: The existing street shall consist of a graveled surface constructed to a minimum depth of 6" and a minimum width of 20 feet. For purposes of this policy, it is assumed that the existing street will meet these minimum requirements. If it does not, costs to improve the existing street to these minimum requirements shall be the responsibility of the City. However, if the existing street is disturbed due to utility extensions associated with the street extension, it shall be reconstructed to City of Duluth standards for a graveled street – including Type 5 geotextile fabric and 12" of Class 5 granular base (24 feet wide). Costs to reconstruct the existing street shall be the responsibility of the developer.

Extended street: The extended street shall be constructed to City of Duluth standards for a rural bituminous street – including Type 5 geotextile fabric, 12" of Class 5 granular base (24 feet wide), and 3" of bituminous surfacing (22 feet wide); or to standards matching the existing street if greater. Appropriate street drainage (to be approved by City Engineering prior to construction) shall be provided. Costs to construct the extended street shall be the responsibility of the developer.

Alternative: At the City's discretion, the existing street shall be included in the City's formal Street Improvement Program (SIP) and constructed to SIP standards, with reconstruction costs to be shared between the City and adjacent property owners per SIP guidelines. In this case, the extended street shall be constructed to City of Duluth standards for an urban street as previously described, with costs to construct the extended street to be the responsibility of the developer.

6. Street of significant length (> 300 feet) that will be extended more than 300 feet.

Existing street: The existing street shall consist of a graveled surface constructed to a minimum depth of 6" and a minimum width of 20 feet. For purposes of this policy, it is assumed that the existing street will meet these minimum requirements. If it does not, costs to improve the existing street to these minimum requirements shall be the responsibility of the City. However, if the existing street is disturbed due to utility extensions associated with the street extension, it shall be reconstructed to City of Duluth standards for a graveled street – including Type 5 geotextile fabric and 12" of Class 5 granular base (24 feet wide). Costs to reconstruct the existing street shall be the responsibility of the developer.

Extended street: The extended street shall be constructed to City of Duluth standards for an urban bituminous street – including Type 5 geotextile fabric, 24" of Class 5 granular base (28 feet wide), 3½" of bituminous surfacing (28 feet wide) and concrete curb & gutter. Costs to construct the extended street shall be the responsibility of the developer.

Alternative: At the City's discretion, the existing street shall be included in the City's formal Street Improvement Program (SIP) and constructed to SIP standards, with reconstruction costs to be shared between the City and adjacent property owners per SIP guidelines. In this case, the extended street shall be constructed to City of Duluth standards for an urban street as previously described, with costs to construct the extended street to be the responsibility of the developer.

Summary

The purpose of this policy is to provide a reasonable and consistent manner in which to address the required level of improvements to both an existing street that will serve as a connection to a proposed street extension and is currently not constructed to City standards, and a proposed street extension itself. It is recognized that certain situations may require variance from these policies. Any variance requests shall be reviewed and acted upon by the Special Assessment Board following review and recommendations of the City Engineer.

In addition, it is recognized that under those categories where a street is not constructed, reconstructed or improved to City of Duluth standards for an urban bituminous street, there may be a need for a recordable "disclaimer" agreement between the City and the developer so as to provide for the assessment of future street improvements against adjacent properties per the City's Code provisions regarding "Local Improvements (Article VII.)

FIRE APPARATUS ACCESS ROADS

SECTION D101
GENERAL

D101.1 Scope. Fire apparatus access roads shall be in accordance with this appendix and all other applicable requirements of the *International Fire Code*.

SECTION D102
REQUIRED ACCESS

D102.1 Access and loading. Facilities, buildings or portions of buildings hereafter constructed shall be accessible to fire department apparatus by way of an approved fire apparatus access road with an asphalt, concrete or other approved driving surface capable of supporting the imposed load of fire apparatus weighing at least 75,000 pounds (34 050 kg).

SECTION D103
MINIMUM SPECIFICATIONS

D103.1 Access road width with a hydrant. Where a fire hydrant is located on a fire apparatus access road, the minimum road width shall be 26 feet (7925 mm). See Figure D103.1.

D103.2 Grade. Fire apparatus access roads shall not exceed 10 percent in grade.

Exception: Grades steeper than 10 percent as approved by the fire chief.

D103.3 Turning radius. The minimum turning radii shall be determined by the code official.

D103.4 Dead ends. Dead-end fire apparatus access roads in excess of 150 feet (45 720 mm) shall be provided with width and turnaround provisions in accordance with Table D103.4.

TABLE D103.4
REQUIREMENTS FOR DEAD-END FIRE APPARATUS ACCESS ROADS

LENGTH (feet)	WIDTH (feet)	TURNAROUNDS REQUIRED
0–150	20	None required
151–500	20	120-foot "Hammerhead," 60-foot "Y" or 96-foot-diameter cul-de-sac in accordance with Figure D103.1
501–750	26	120-foot Hammerhead, 60-foot "Y" or 96-foot-diameter cul-de-sac in accordance with Figure D103.1
Over 750	Special approval required	

For SI: 1 foot = 304.8 mm.

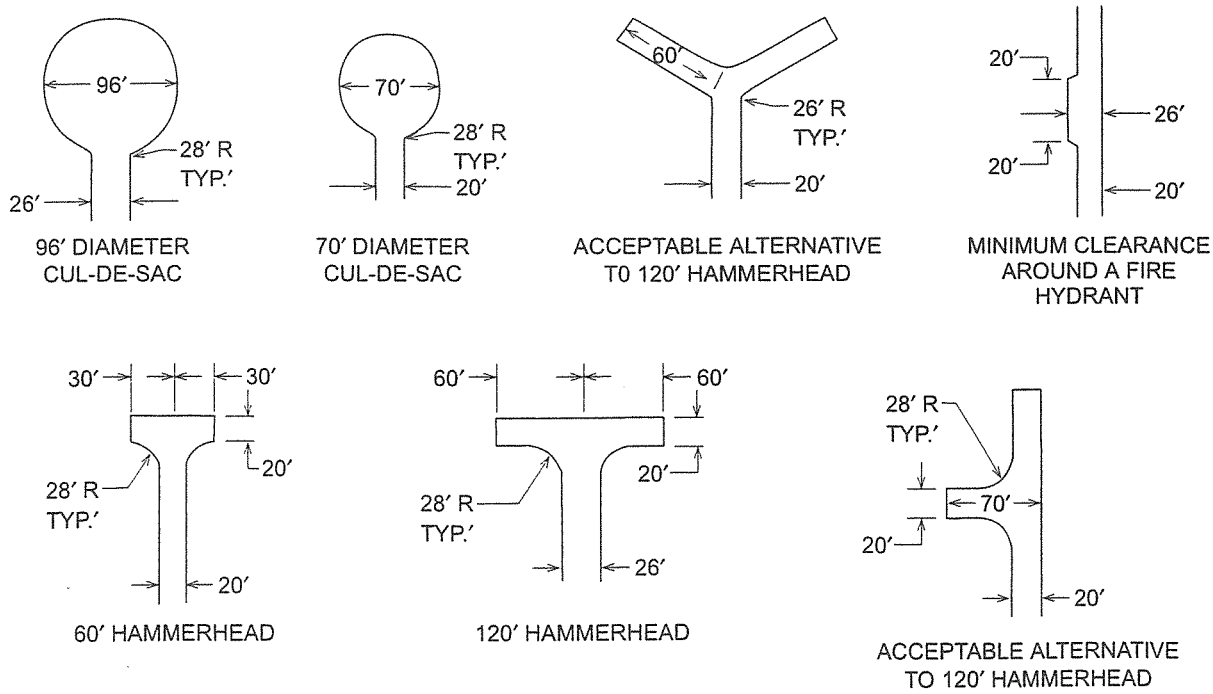

For SI: 1 foot = 304.8 mm.

FIGURE D103.1
DEAD-END FIRE APPARATUS ACCESS ROAD TURNAROUND

City of Duluth
Policy on Street Extensions for Limited Residential Development
Standard Termini of Street Extension

Any street extended under this Policy shall terminate in the following manner based on the length of extended street. However, no extended street should terminate in a manner that would be consider "lesser" than the manner of termination of the existing street – except by variance of the City Engineer and/or the Special Assessment Board.

Street to be extended 100 feet or less.

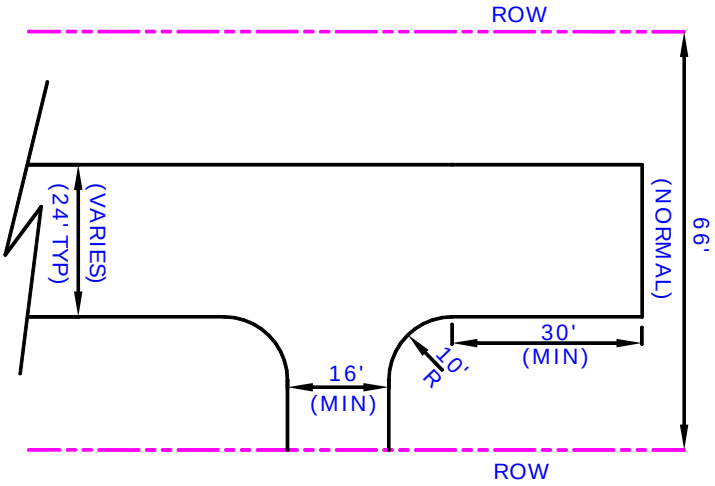

Street to be extended 100 to 300 feet.

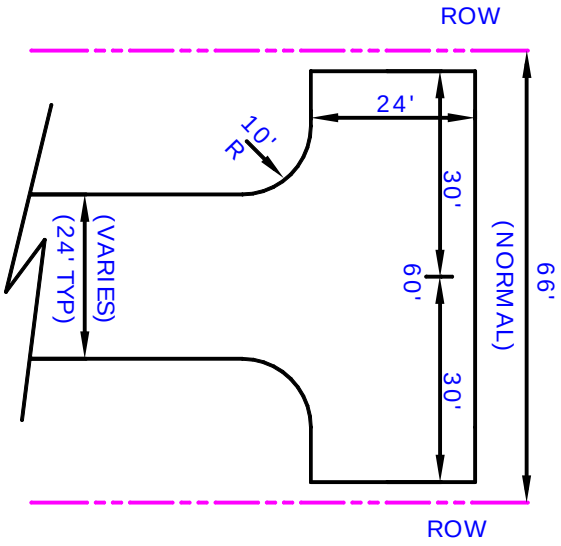

Street to be extended more than 300 feet.

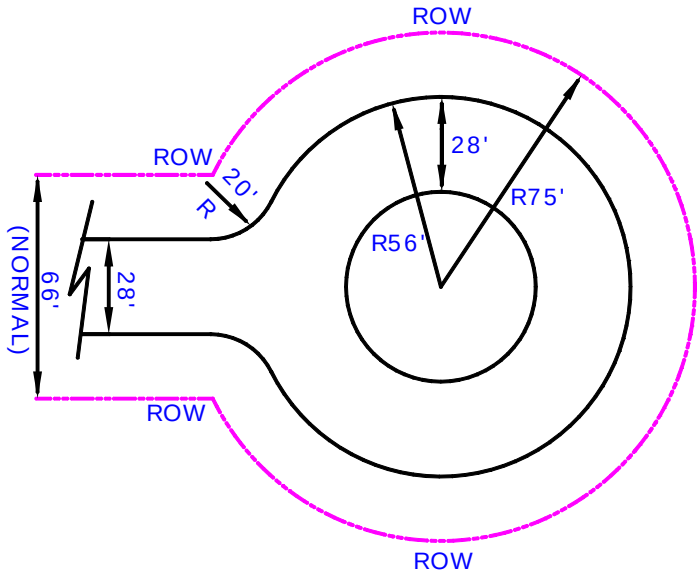

APPENDIX D
Example: Typical Sections

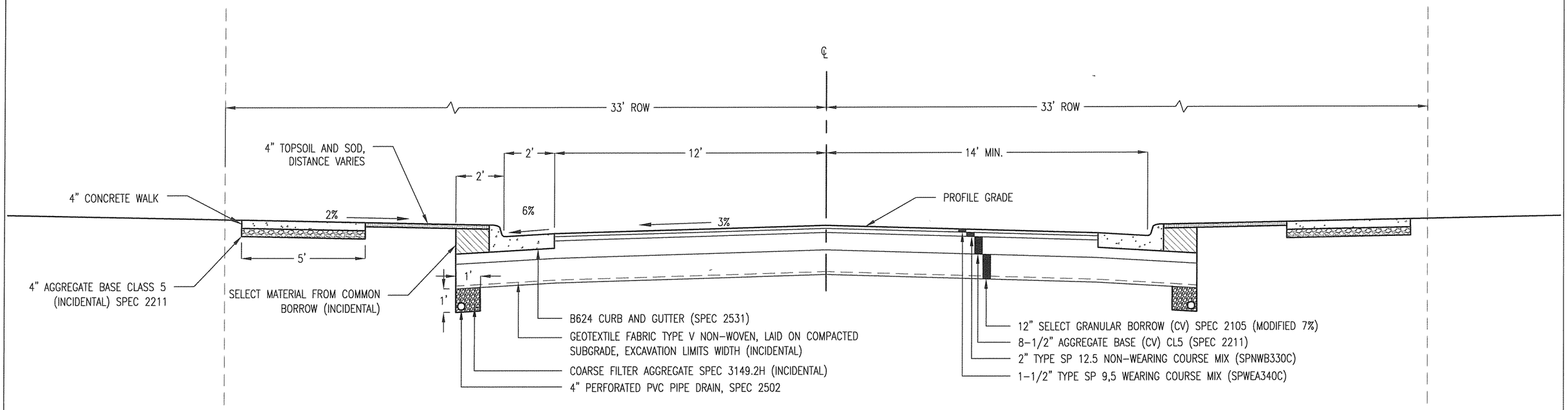

TYPICAL SECTION
URBAN STREET WITH SIDEWALKS

CERTIFIED BY:	REG. NO.:			T-8 URBAN STREET WITH SIDEWALKS	DRAWN BY: KLB
		△		CITY OF DULUTH	TYPICAL SECTION
SIGNATURE:	DATE: 6-25-2012	△		CITY PROJECT NO.: N/A / STATE AID PROJECT NO.: N/A	SHEET NO. OF

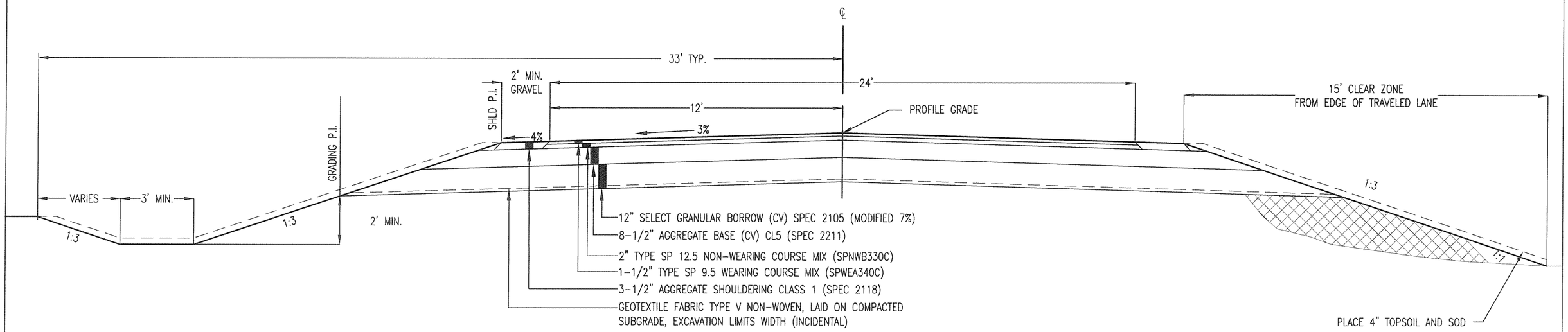

TYPICAL SECTION FOR RECONSTRUCTION ONLY
RURAL STREET

NOTES

1. ALL DITCH BOTTOMS, TOE OF FILL SLOPES, AND TOP OF BACK SLOPES SHALL BE ROUNDED.
2. CONSTRUCT TYPICAL SECTION TO END OF RADII ON ROAD APPROACHES.
3. CONSTRUCT BROKEN BACK SLOPE WHEN ELEVATION AT PIVOT POINT TO NATURAL GROUND LEVEL AT TOE OF SLOPE EXCEEDS 3'.
4. ALL UTILITY POLES AND UNYIELDING OBJECTS SHALL BE REMOVED AND RELOCATED OUTSIDE THE CLEAR ZONE.
5. STANDARD DITCH BOTTOM IS 3'. SEE SWPPP SHEET AND THE CROSS SECTIONS FOR EXCEPTIONS.
6. TACK, SPEC 2357, SHALL BE APPLIED BETWEEN ALL LAYERS OF BITUMINOUS PAVEMENT.
7. SLOPE DRESSING MATERIAL IS TO BE PLACED ON ALL SLOPES. MATERIAL IS TO BE SALVAGED FROM PAY ITEM 2106.607 EXCAVATION – COMMON. SLOPE DRESSING MATERIAL PLACEMENT IS INCLUDED IN PAY ITEM 2106.607 COMMON EMBANKMENT (CV).
8. PAY ITEM 2106.607 COMMON EMBANKMENT (CV). MATERIAL USED SHALL BE SELECT GRADING MATERIAL FROM PAY ITEM 2106.607 EXCAVATION – COMMON, OR HAULED IN FROM OFF PROJECT CONTRACTOR SOURCES IF AVAILABILITY IS DETERMINED TO BE INSUFFICIENT BY THE CONTRACTOR OR THE PROJECT ENGINEER.
9. PAY ITEM 2106.607 COMMON EMBANKMENT (CV). MATERIAL USED SHALL BE REGULAR GRADING MATERIAL OR EXCESS SELECT GRADING MATERIAL FROM PAY ITEM 2106.607 EXCAVATION – COMMON.
10. ALL EXCAVATION TO BE PAID AS 2106.607 EXCAVATION – COMMON. BITUMINOUS REMOVAL QUANTITY IS NOT INCLUDED IN EXCAVATION – COMMON PAY TEM.
11. ANY ADDITIONAL EXCAVATION (OTHER THAN SLOPE DRESSING MATERIAL), AS DEEMED NECESSARY BY THE ENGINEER WILL BE ADDED TO THE EXCAVATION – COMMON QUANTITY AND PAID FOR AT THE BID PRICE. ANY ADDITIONAL BACKFILL SHALL BE BY THE APPROPRIATE EMBANKMENT ITEM AND WILL BE PAID OR AT THE ITEMS UNIT BID PRICE.

CERTIFIED BY: REG. NO.:			T-7 RURAL STREET		DRAWN BY: KLB
SIGNATURE: DATE: 6-25-2012	△		CITY OF DULUTH		TYPICAL SECTION
	△		CITY PROJECT NO.: N/A	STATE AID PROJECT NO.: N/A	SHEET NO. OF

APPENDIX E
City of Duluth Driveway Entrance Requirements

CURB CUTS - DRIVEWAY APRONS

2/1/2015

The driveway *itself* requires no permit.

PERMIT REQUIRED FOR:

1) Any NEW driveway apron: (a) with or without a curb
   (b) with or without a culvert
2) WIDENING an EXISTING apron WITH A CONCRETE or BITUMINOUS CURB or a CULVERT.
3) REDO an EXISTING driveway apron--replacing the existing materials. It doesn't matter if the present apron is gravel, blacktop, or concrete as long as it's EXISTING.

NO Permit Required for:

1) Re-blacktop an existing blacktop driveway and/or apron: (a) with or without a curb
   (b) with or without a culvert
2) On a blacktop or gravel street, blacktop an existing gravel apron

NOTE:

*** If the work involves the sidewalk (the sidewalk will be removed and replaced), a permit will be required in all cases. ***

General Information

It **IS NOT** permissible to place blacktop in the gutter to relieve the bump at the driveway entrance.

- A concrete street requires a concrete driveway apron.
- Blacktop streets with a concrete curb and gutter require a concrete apron.
- Blacktop streets without a curb/gutter or with a blacktop curb/gutter will use a blacktop or concrete apron.
- Gravel streets may use a gravel or blacktop apron.

Driveway aprons can be constructed over sewer/gas/water mains.

The driveway itself or the *flare* of the apron, can be placed right on the property line. However, putting a driveway that close to a property line means working on a neighbor's property just to construct the driveway or apron. Also, simply getting into or out of a car might also need to be done on a neighbor's property–that property owner may object.

With street improvement projects, the contractor may replace an existing apron or construct a new concrete driveway apron (if a gravel or blacktop apron is in place). Usually, there will be no charge to the property owner; however, on occasion, an assessment may be levied along with the assessment for the street improvement.

- With no sidewalk, the contractor must construct the driveway apron to a minimum of three feet behind the curb.
- With a sidewalk, the contractor must construct the driveway apron to the public sidewalk (as the sidewalk is considered the nearest public improvement from the street).

EXCEPTION: *IF* the boulevard is ten feet or more in depth, concrete is not necessary all the way to the sidewalk. Concrete is only required for the first three feet of the apron; blacktop may be used to complete the apron to the sidewalk.

TO OBTAIN A PERMIT FOR A CURB CUT (driveway apron)

1) Complete an application for a curb cut.
   Send/give specifications sheets as well.
   Be certain applicant sketches a drawing of his/her proposed construction.
2) For streets/avenues not requiring a culvert, a front counter technician may approve the application.
3) If a culvert is necessary or possibly necessary, follow Culvert Installation Policy instructions.
4) An insured and bonded contractor must be engaged to install the actual driveway apron (as the work is being done in the right-of-way).
5) Excavation Permit/Driveway permit issued for $70.00 to the contractor.

APPENDIX F
Policy on the Issuance of Driveway Permits for Private Improvements in Right-of-Way

Policy on the Issuance of Driveway Permits for Private Improvements in Right-of-Way

Policy on the Issuance of Driveway Permits for Private Improvements in Right-of-Way

Background

Prior to the August 15, 2008 Minnesota Supreme Court case *Bolen v Glass*, the issuance of driveway permits on unimproved "paper" right-of-way was done only if easements from all abutting parties were obtained. This was considered a private property matter. Based on the ruling in the case, it was decided that the City was the trustee of the right-of-way and had the authority to determine when and how the right-of-way is improved. The City has the authority to issue a permit for private improvements within the dedicated right-of-way. It was also determined that the owners of property within a plat have the right to use the right-of-way for access purposes, subject to the issuance of a permit by the city.

Criteria for Issuing Driveway Permits within Right-Of-Way

1. If the property is a corner lot with improved frontage and the driveway request is on the unimproved "paper" street, a permit may be issued to the owner to construct a private driveway in the unexercised easement between their property and the property adjacent to the easement. See attached Exhibit 1.
2. Driveways requiring additional length beyond the property line of the corner lot shall either be built as public street or alley to City of Duluth "Local Design Standards" or for driveways not constructed to the "Local Design Standards", the permittee shall be required to obtain private driveway easements from the abutting property owners. In both cases, the city would issue a permit, the permittee would provide the proper bonds and insurance for work within the right-of-way and agree to be responsible for any maintenance and snow removal. See attached Exhibit 2.
3. Any permits issued shall be subject to the following conditions:
   a) Private driveways shall not be allowed when the street serves other residential developable lots within the plat that may use this driveway for access to their property in the future.
   b) Private driveway permits will be allowed in residentially zoned areas only--not commercial.
   c) Private driveways will not be allowed to serve properties that can be further subdivided.
   d) Prior to issuing the driveway permit, the property owner must sign an "Agreement to Petition for (future) Street Improvement" which needs to be recorded by the city. This helps ensure that in the future, the resident has waived their right to protest the permanent street or alley assessment.
   e) The property owner will be responsible for maintaining and plowing the private driveway.
   f) The property owner or contractor will need to have the appropriate bonds and insurance on file for work within the right-of-way.

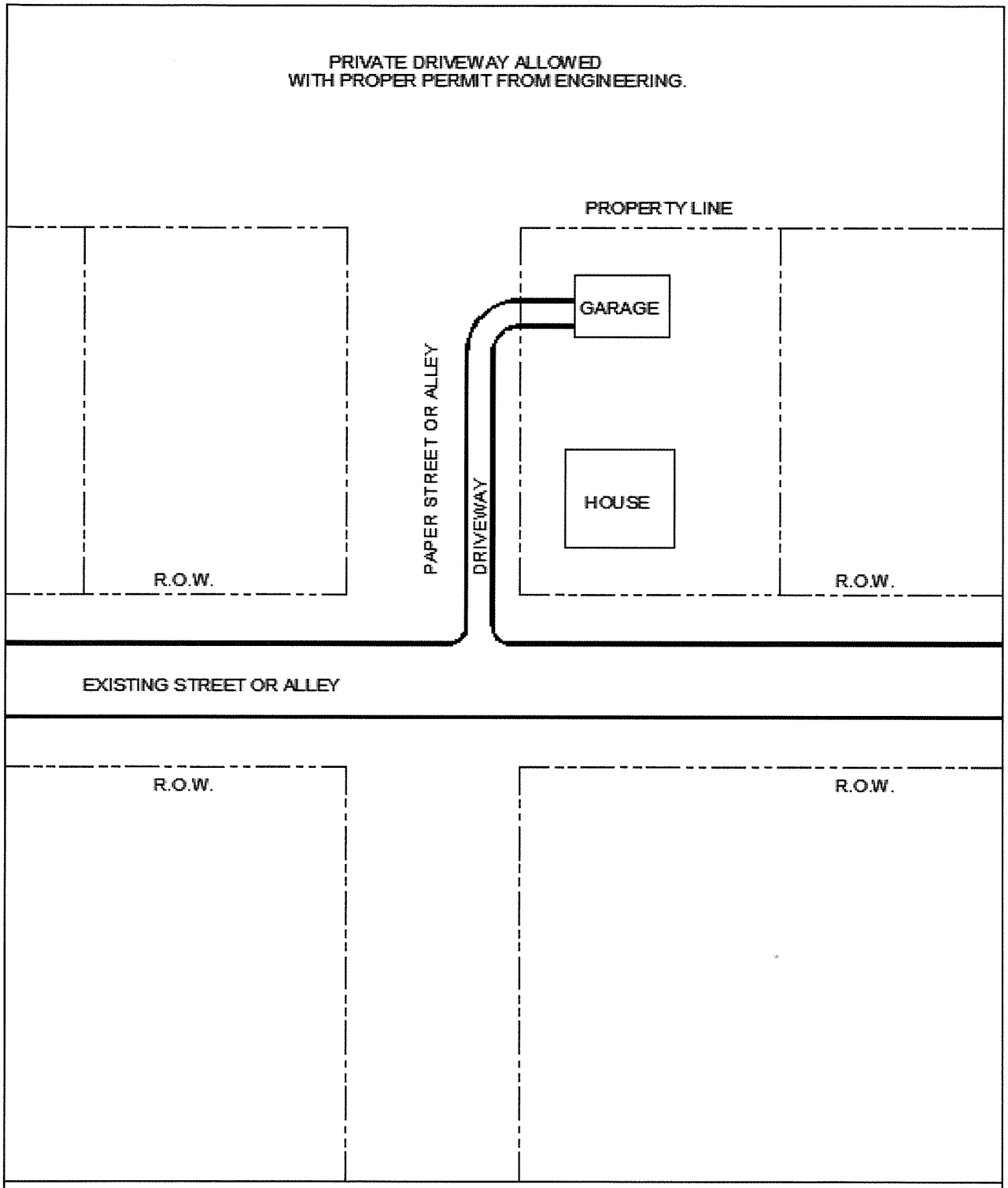

EXHIBIT 1
PERMIT FOR DRIVEWAY ISSUED

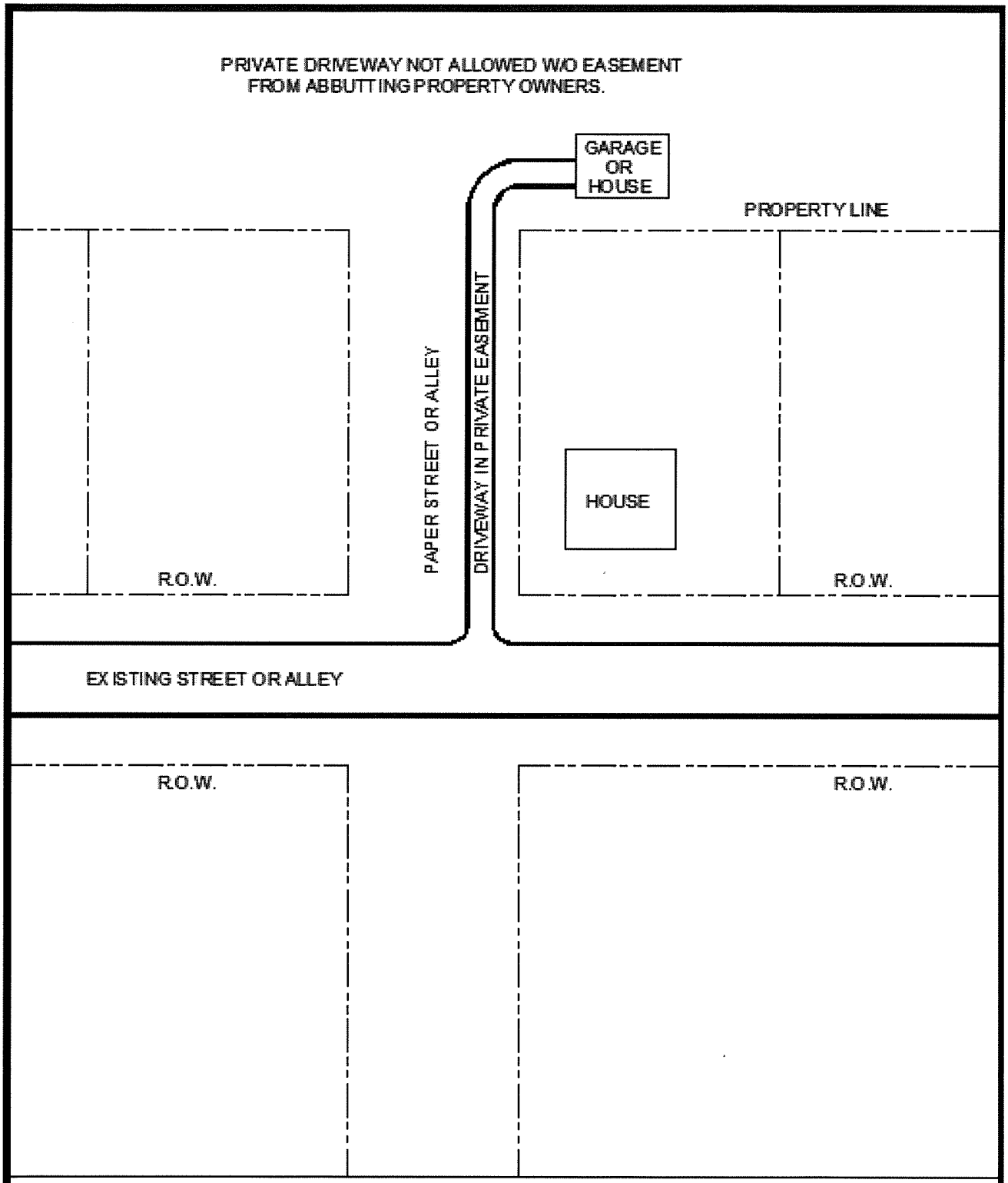

EXHIBIT 2
EASEMENT FOR DRIVEWAY REQUIRED

APPENDIX G
Sanitary Sewer Basins – General Map

Consent Decree Basins ; January 2010
1 through 11 and 13 through 26

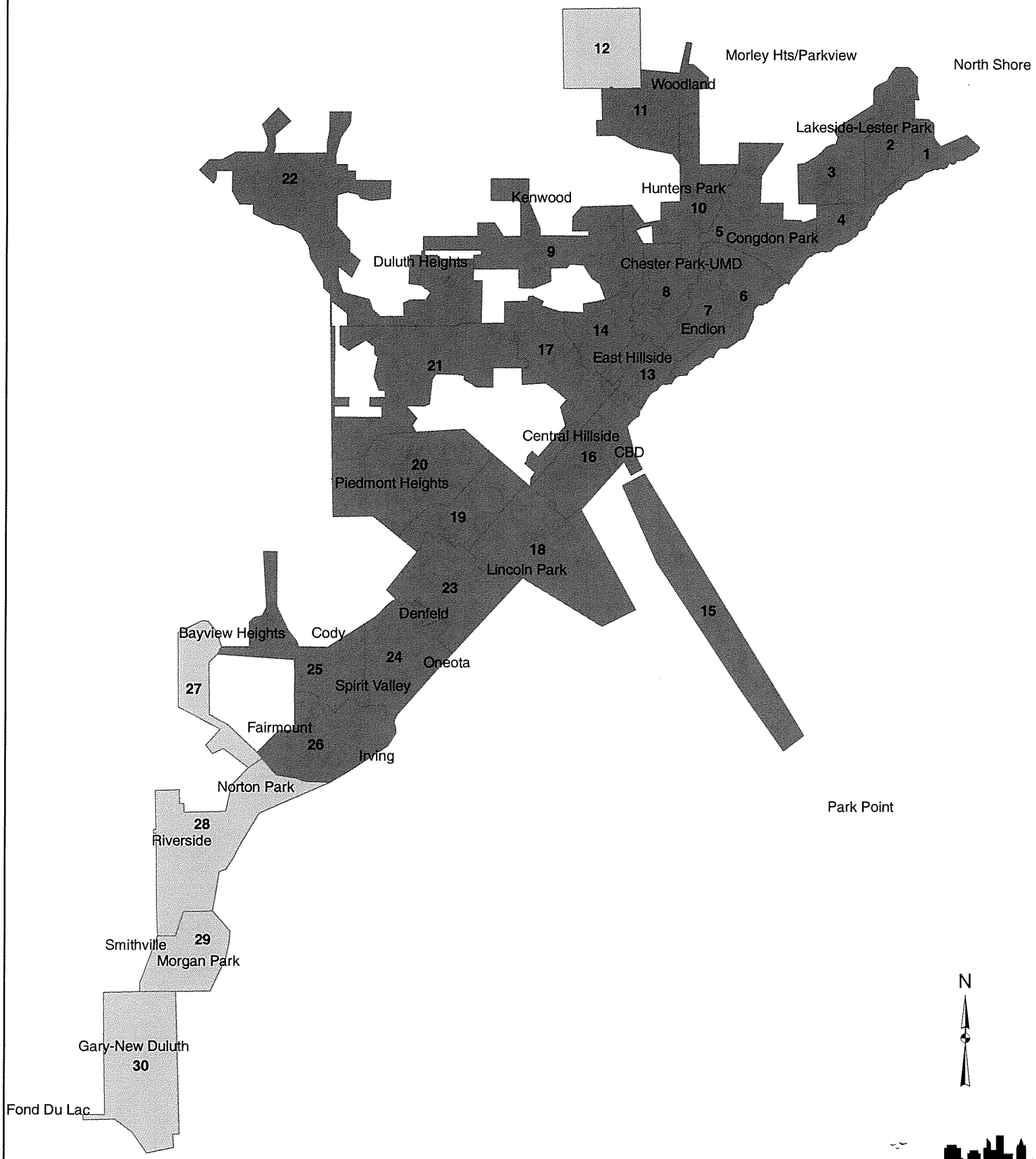

APPENDIX H
Unified Development Code Stormwater Section

Stormwater management and erosion control.

1. Goals and purpose.
   (a) The federal Clean Water Act (CWA) requires that municipal stormwater discharges be authorized under the national pollution discharge elimination system (NPDES). The city is allowed to discharge its stormwater under coverage provided by a CWA municipal separate storm sewer system general permit (MS4 permit). As part of the requirements of the permit, the city is required to develop a stormwater pollution prevention program (MS4 program) with specific goals requiring:
      (i) Non-degradation of all city waters;
      (ii) Restrictions to special designated waters in the city, including: (a) Lake Superior (which is an MPCA designated outstanding value resource water with both restricted discharge and impaired water designations); (b) St. Louis River (which is an MPCA designated impaired water and area of concern; and (c) 16 trout streams designated by the DNR;
   (b) The goals described in the city's MS4 program pertaining to illicit discharge detection and elimination, construction-site runoff controls, and post-construction runoff treatment are incorporated into this Chapter by reference;
   (c) The purpose of this Section 50-18.1.E is to establish regulations to comply with the federal CWA and the city's MS4 permit and to achieve the goals stated in the city's MS4 program;
   (d) All proposed developments shall follow the requirements in the most recent version of the city of Duluth, engineering guidelines for professional engineering services and developments, and the city of Duluth construction standards were applicable;
   (e) Refer to the Minnesota Stormwater Manual and other stormwater management publications for temporary and permanent low impact development design practices;
2. Temporary erosion and sediment controls.
   (a) Applicability.
   This Section 50-18.1.E.3 applies to all land disturbing activities within the city, except those specifically exempt in this Section and those subject to a superseding or preemptive state or federal law. This Section shall be deemed to supplement, but not to conflict with, the applicable provisions of the State Building Code;
   (b) Requirements.
   All proposed development and redevelopment and all subdivision plats and re-plats shall include drainage system and temporary erosion and sediment best management practices (BMPs) in compliance with the city's MS4 program and the requirements shown in Table 50-18.1.E-1 below. Plans, engineering analysis and calculations, diagrams, drainage reports and other data shall be submitted, as required by the city engineer or designee with each development proposal or application for permit;

Table 50-18.1.E-1: Temporary Erosion and Sediment Controls			
Land Area Disturbed ► **Development Plan Measures Required ▼**	**≤ 3,000 sq. ft.** [1]	**> 3,000 sq, ft. and < 1 acre**[2]	**≥ 1 acre**
Temporary erosion and sediment controls to prevent any off-site migration of sediment	✔		
Site specific Erosion and Sediment Control Plan (ESCP) and ESCP Permit from city engineer		✔	✔
Site specific Stormwater Pollution Prevention Plan (SWPPP) meeting MPCA NPDES Permit requirements for Construction Activity		✔	✔
MPCA NPDES/State Disposal System Construction Stormwater Permit			✔
MS4 Statement of Compliance from city engineer		✔	✔

[1] If the city engineer determines that the proposed development is in a vulnerable area and may cause the degradation of the waters connected to the city's stormwater system, then the provisions applicable to land disturbance areas greater than 3,000 sq. ft. shall apply.
[2] If land disturbed is within a mapped shorelands zone, an MS4 Statement of Compliance from the city engineer is also required.

(c) Authority to waive.
The city engineer has authority to waive the requirements in Table 50-18.1.E.1 in accordance with the city's MS4 permit. If stormwater and erosion controls required by this subsection 2 are demonstrated to be technically feasible, provisions of subsection 2 must be met to the maximum extent practicable;

3. Permanent water quality and discharge rate, volume and temperature controls.
   (a) Applicability.
      (i) This Section 50-18.1.E.3 applies to all land disturbing activities within the city, except those specifically exempt in this Section and those subject to a superseding or preemptive state or federal law. This Section shall be deemed to supplement, but not to conflict with provisions of the State Building Code;
      (ii) This Section does not apply to pavement resurfacing and pavement rehabilitation projects that meet all of the following conditions:
         - No new impervious surface is created;
         - There is no change to the configuration of the site;
         - There is no change to the land use;
   (b) General requirements.
   All proposed development and redevelopment and all subdivision plats and re-plats shall include a drainage system with stormwater runoff site, volume and temperature controls and water quality treatment in compliance with the city's MS4 program and the requirements shown in Table 50-18.1.E-2 below. Plans, engineering analysis and calculations, diagrams, drainage reports and other data shall be submitted, as required by the city engineer with each project (referred to as the "development plan" below);

Table 50-18.1.E-2: Permanent Water Quality and Discharge Rate, Volume and Temperature Controls *[See additional requirements for land in shorelands below]*		
	Total New Impervious Area Created or the Impervious Area Redeveloped[1][2]	
Development Plan Measures required ▼	**≤ 3,000 sq. ft.**	**> 3,000 sq. ft.[3][4]**
Water quality treatment	NONE	✓
Runoff rate controls		✓
Volume Controls		✓
Temperature Controls[5]		✓
Drainage report		✓
Site specific SWPPP		✓
BMP Operation and Maintenance Manual		✓
MS4 Statement of Compliance from city engineer		✓

[1] The total area is the sum of both the new and redeveloped impervious areas that are part of the common plan of development or sale.
[2] A pavement resurfacing or pavement rehabilitation project is exempt where: (a) no new impervious surface is created; and (b) no change to configuration of the site occurs; and (c) no change to land-use occurs.
[3] An individual one-family or two-family residence (that is not part of a common plan of development) with less than 10,000 sq. ft. of disturbed area and less than 7,500 sq. ft. of new impervious area is exempt.
[4] If the site contains an existing impervious surface area greater than one acre, the drainage report must include a determination of the current total suspended solids removal across the entire site. If the current TSS removal is below 50 percent, the drainage report must include an evaluation of the feasibility of increasing the TSS removal to 50 percent on an annual basis across the entire site.
[5] Temperature controls are required for projects that discharge to, and are within one mile from, a trout/cold water stream.

(c) Authority to waive.
The city engineer has authority to waive the requirements in Table 50-18.1.E-2 in accordance with the city's MS4 permit, if the developer demonstrates it to be technically non-feasible AND then mitigates for the non-compliance by increasing the level treatment or control of one of the other requirements;

(d) Shoreland requirements.
(i) In addition to the requirements in subsection 50-18.1.E.3(b) above, no residential development or redevelopment within a shoreland shall result in impervious surface area exceeding 25 percent of the lot area unless the owner (a) submits a development plan including water quality treatment and (b) obtains an MS4 statement of compliance by the city engineer;
(ii) In addition to the requirements in subsection 50-18.1.E.3(b) above, no commercial, mixed use, institutional or industrial development or redevelopment within a shoreland shown on the NR-O map shall create new impervious surface area unless the owner (a) submits a development plan including water quality treatment and (b) obtains an MS4 statement of compliance issued by the city engineer;

(e) Water quality treatment requirements.
Where subsection 50-18.1.E.3(b) requires that a development plan include water quality treatment, the development or redevelopment must provide at least the minimum treatment shown in Table 50-18.1.E.3;

Table 50-18.1.E-3: Water QualityTreatment Requirements (Total Suspended Solids TSS, Total Phosphorus TP)		
Development Type	**New and Existing Impervious surface**	**Required Treatment**
New	> 3,000 S.F.	No net increase of TSS/TP from predevelopment conditions.
Redevelopment	> 3,000 S.F. and < 1 acre	10% reduction in impervious surface or 50% TSS removal (TP to be removed via TSS reduction).
Redevelopment	≥ 1 acre	50% TSS removal. No net increase in TP from pre-project condition.

(f) Runoff rate control.
Where subsection 5018.1.E.3(b) requires that a development plan include runoff rate control, the development or redevelopment must be designed to provide the controls as follows. Runoff rate control is beneficial in the upper, flatter part of the watershed above the bluff line. Below the bluff line, the topography is relatively steep and stormwater flows quickly to Lake Superior and the St. Louis River. This bluff line designation is show on the NR-O map. The stormwater rate control requirements for development and redevelopment are shown in Table 50-18.1.E-4;

Table 50.18.1.E-4: Discharge Rate Limits		
Location ►	**Post-Development Peak Flow Rates at Each Discharge Point Shall Not Exceed**	
Type of Activity ▼	**Zone A -- Above Bluff Line**	**Zone B -- Below Bluff Line**
New Development	75% of predevelopment peak flow rates for 10 and 100 year events; and 90% of predevelopment peak flow rate for 2 year event	Predevelopment peak flow rates for all storm events
Redevelopment	Predevelopment peak flow rates for all storm events	Predevelopment peak flow rates for all storm events

(g) Stormwater runoff volume control.
Where subsection 50-18.1.E.3(b) requires that a development plan include storm water runoff volume control, the development or redevelopment must be designed to provide the controls so that the volume of stormwater runoff discharged from a proposed project shall not exceed the pre-development site conditions;

(h) Storm water temperature control.
Temperature controls are required for development and redevelopment where subsection 50-18.1.E.3(b) specifies. Temperature controls are beneficial for trout/cold water streams, by minimizing the increase in stream temperatures from stormwater runoff from impervious surfaces that tend to be warmer than natural vegetated surfaces. The potential for the increase in temperature of stormwater runoff discharged from a proposed project shall be minimized through the use of certain BMPs and/or site design methods;

(i) General design criteria.
   (i) New minor system drainage systems shall be designed to efficiently convey the peak discharge rates for a ten-year flow;
   (ii) New major system drainage systems shall be designed to efficiently convey the peak discharge rates for a 100-year flow;
   (iii) The 100-year rainfall event or 100-year peak flow shall be evaluated to ensure that no damage occurs to adjacent properties for all systems;

(iv) The stormwater management systems for any new or redevelopment project shall maintain at least two feet of freeboard between the anticipated 100-year high water elevation and the minimum building opening;

(v) Consideration may be given for treating existing untreated impervious areas diverted to the site and included in the control area for analysis if it is in the best interest of the city;

(vi) All impervious areas shall be considered connected and curve numbers shall not be weighted for impervious areas except under special circumstances;

(vii) Ninety-five percent of all newly added impervious surface shall have its runoff directed to the water quality treatment area. If it is impractical to direct 95 percent of the added impervious surface to water quality area, alternate methods may be used in combination so long as 95 percent is treated and all peak flow requirements are fulfilled;

(viii) Flow shall not be diverted from one major or minor system to another major or minor system;

(ix) When stormwater management plans involve directing runoff from a site, it shall be the responsibility of the applicant to obtain from adjacent property owners any necessary easements or other property interests concerning flowage of water to a point where the stormwater enters a major system;

(x) Adequate measures shall be taken to prevent uncontrolled drainage across lot lines;

4. General stormwater restrictions.
   City of Duluth has numerous ordinances regarding stormwater runoff and the protection of the area's water resources. Refer to the Duluth, MN - Legislative Code, Chapter 43 Article XI Stormwater Utility System, Chapter 45 Division 2 – Improvements by Private Party and Article VIII – Obstructions to Watercourses, and Illicit Discharge;
5. Ownership and maintenance.
   (a) Maintenance of temporary erosion and sediment control practices.
   During the period of a land disturbing activity, the person engaging in the construction shall be responsible for installing and maintaining erosion and sediment control practices. After construction is completed, the owner of the property shall be responsible for installing and maintaining erosion and sediment control practices. For the purposes of inspection during construction monitoring, the permittee shall maintain inspection logs and will make them available to the city upon request. The permittee shall retain the inspection logs for three years after the project is complete;

   (b) Ownership.

   (i) All components of the stormwater management system shall be constructed, owned, operated and maintained by the developer or owner(s) to their confluence with the major system or city owned minor system;

   (ii) In the case of developments in which right-of-way is transferred to public ownership, the storm drain system within the city right-of-way shall be owned and maintained by the city. Stormwater treatment facilities and ponds shall be in common space and shall be owned and maintained by the developer or the owners of the development. Stormwater treatment facilities shall not be located in the public right-of-way;

   (c) Owner inspection, operation and maintenance.

   (i) A stormwater management facilities operation and maintenance manual shall be prepared by an engineer for the development and approved by the city engineer;

(ii) Stormwater management facilities shall be designed to minimize maintenance and provide inspection and maintenance access;

(iii) All facilities shall have a plan of operation and maintenance that assures continued effective removal of runoff pollutants and accumulated sediment;

(iv) The developer or the owner(s) shall be responsible for inspection, maintenance and reporting for all non-publicly owned stormwater management facilities associated with the development. Facilities shall include structural components and all non-structural components (buffer strips, swales and other stormwater management practices that were part of the approved development);

(v) An annual inspection and maintenance report shall be submitted to the city engineer. Inspection and maintenance shall be performed on a regular basis so the stormwater management facilities function as designed, but not less than annually. Maintenance work and repairs identified in the annual report shall be completed within three month of the annual inspection;

(vi) The inspection and maintenance of the stormwater facility shall be performed by a qualified professional and who will prepare and sign the annual inspection/maintenance report.

Copies of the inspection and maintenance records shall be maintained by the developer or owner for a period of six years. Copies of all inspection records shall be provided to the city upon request.

APPENDIX I
Preliminary Design Submittal Worksheet

City of Duluth
DEPARTMENT OF PUBLIC WORKS/UTILITIES
Engineering Division
211 City Hall • Duluth MN 55802
(218) 730-5200 Fax: (218) 730-5907

PRELIMINARY DESIGN SUBMITTAL WORKSHEET AND MEETING

A preliminary storm water management design meeting is required for all projects that must meet the requirements of the UDC and Engineering Guidelines. This process allows for a discussion of the proposed development in the context the Community Drainage System and the temporary and permanent stormwater management requirements by the MPCA and the City of Duluth.

Date: Date of Meeting: Est. Project Start Date:

Project Name/Owner:

Project Location:

Engineering Firm/Engineer:

Project Narrative: (Include the scope of project and clearly describe predevelopment and post development site conditions. Discuss UDC requirements; water quality treatment, and discharge rate, volume and temperature controls. Discuss how project will consider Conservation/Low Impact Design Methods to the Maximum Extent Practical).

A Preliminary Site Plan (PSP) is required:
The PSP doesn't have to be CADD developed as long as it is clearly drawn showing a minimum of:
_____PSP to be on 11 x 17 sized sheets
_____Overall concept(s) of Development
_____Predevelopment site plan with existing utilities and roads, and topography
_____All existing and proposed catchment areas roughly delineated with flow arrows
_____NR-O Map (floodplain type, shoreland class and stormwater rate control zone)
_____All wetlands both delineated and potential areas shown
_____Show down gradient conveyance routes from site (property ownership, receiving waters…)

APPENDIX J
Drainage Report Submittal Checklist

City of Duluth
department of public works/utilities
Engineering Division
211 City Hall · Duluth MN 55802
(218) 730-5200

Drainage Report Submittal Check List (include with Drainage Report)

Project Name:_____

Owner / Developer:_____

Engineering Firm and Engineer:_____

Drainage Report Date:_____ **Est. Construction Start Date:**_____

Drainage Report Document	Included	
	Yes	No
Cover Sheet - signed by engineer		
Drainage Report Submittal Check List		
Table of Contents		
Summary		
Summary tables of pre/post conditions -		
Pervious and impervious areas, discharge rates and volumes (2,10,100yr)		
Statement of project performance in context of UDC/Eng. Guidelines		
Narrative of Project		
Pre-Project Conditions		
Complete analysis of pre-conditions with exhibits		
Post-Project Conditions		
Complete analysis of post-conditions with exhibits		
Discussion of project's LID practices		
Discussion of site discharge: routing, Q, TOLV, TSS/TP, T		
BMP descriptions, details, function/routing		
SWPPP		
Exhibits/plan sheets		
Stormwater Management Facilities Operation and Maintenance Manual		
Preliminary O&M		
Plan Set 11x17		
Appendicies		
Modeling outpout, exhibits, soil/geotechnical reports, other supporting documentation		
Supporting Documentation		

APPENDIX K
Example: Standard SWPPP Plan Sheets

SIP EXAMPLE. DEVELOPMENT SWPPP REQUIREMENTS MAY DIFFER

NPDES STORM WATER POLLUTION PREVENTION PLAN (SWPPP)

1. THE PROJECT WILL RECONSTRUCT EXISTING CITY STREETS AND ASSOCIATED INFRASTRUCTURE INCLUDING:
   - 1.1. GRADING AND EXCAVATION
   - 1.2. TRENCHING FOR NEW AND RECONSTRUCTED UTILITIES
   - 1.3. NEW CURB AND GUTTER
   - 1.4. NEW BITUMINOUS AND CONCRETE PAVEMENT
   - 1.5. TURF ESTABLISHMENT.
2. THE TOTAL LAND AREA ANTICIPATED TO BE DISTURBED BY THE PROJECT (EXCLUSIVE OF BORROW AND DISPOSAL AREAS) IS ?? ACRES.
3. CONSTRUCTION DATES ARE ESTIMATED TO BE FROM ?? TO ??.
4. THE RECEIVING WATER FOR STORM WATER FROM THE PROJECT INCLUDES EXISTING STORM SEWER SYSTEMS LEADING TO ?? LAKE SUPERIOR.
5. CITY OF DULUTH MAINTENANCE IS RESPONSIBLE FOR LONG TERM OPERATION AND MAINTENANCE OF THE STORM WATER SYSTEM.
6. CONTACTS:

OWNER & RECORDS RETENTION: (FOR SIP)
CITY OF DULUTH
ENGINEERING DEPARTMENT
211 CITY HALL
DULUTH, MN 55802
(218) 730-5200

THE CITY OF DULUTH PROJECT ENGINEER IS: (FOR SIP)
PROJECT ENGINEER
211 CITY HALL
DULUTH, MN 55802
(218) 730-5091
engineer@duluthmn.gov

TIMING OF BMP INSTALLATION

1. THE EROSION AND SEDIMENTATION CONTROL BMPS SHALL BE INSTALLED AS NECESSARY TO MINIMIZE EROSION FROM DISTURBED SURFACES AND CAPTURE SEDIMENT ON SITE, AND SHALL MEET THE NPDES PERMIT PART IV CONSTRUCTION ACTIVITY REQUIREMENTS.
2. TEMPORARY PERIMETER CONTROL BMPs WILL BE INSTALLED BEFORE ANY UP GRADIENT SOIL DISTURBANCE OCCURS.
3. PERMANENT AND TEMPORARY SEDIMENT TRAPS AND BASINS (IF APPLICABLE) WILL BE CONSTRUCTED BEFORE ANY CONVEYANCE OR DEWATERING OCCURS.
4. TOPSOIL AND TEMPORARY EROSION CONTROL BMPs SHALL BE PLACED WITHIN 3 DAYS OF COMPLETION OF EMBANKMENT
5. PLACEMENT OF RIPRAP SHALL BE COMPLETED WITHIN 24 HOURS OF CULVERT PLACEMENTS AND DONE IN ONE CONTINUOUS OPERATION.
6. ONCE CONSTRUCTION ACTIVITY CEASES FOR 3 DAYS OR MORE IN AN AREA, THAT AREA WILL BE STABILIZED WITH TEMPORARY OR PERMANENT BMPS FOR EROSION.

CALCULATIONS
TOTAL DISTURBED AREA = ?? ACRES
POST CONSTRUCTION IMPERVIOUS AREA = ?? ACRES
EXISTING IMPERVIOUS AREA = ?? ACRES
IMPERVIOUS NET = ?? ACRES (INCREASE/DECREASE)
SOILS INFORMATION: ??

WEBSOILSURVEY.NRCS.USDA.GOV

SILT FENCE, HEAVY DUTY
(HAND INSTALLED)

DESIGN GUIDELINES: TO PROTECT AREAS FROM SHEET FLOW. MAXIMUM CONTRIBUTING AREA: 1 ACRE.

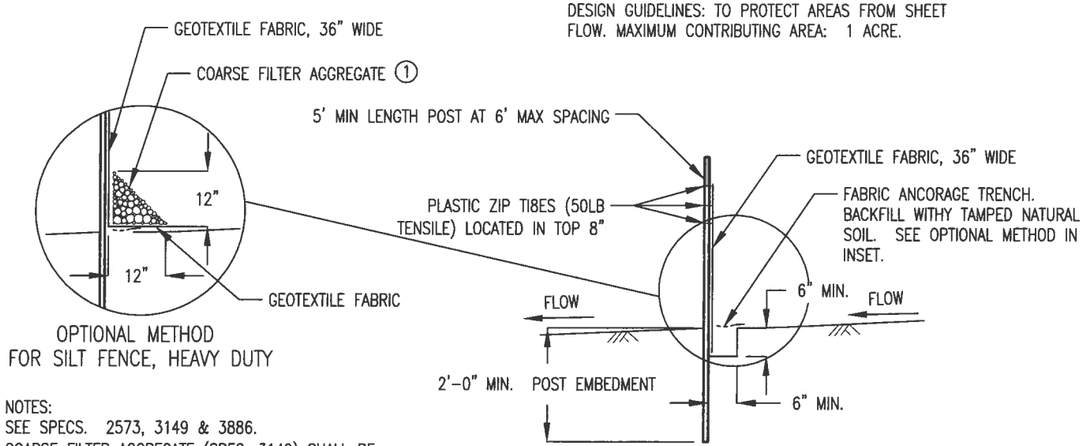

OPTIONAL METHOD
FOR SILT FENCE, HEAVY DUTY

NOTES:
SEE SPECS. 2573, 3149 & 3886.
① COARSE FILTER AGGREGATE (SPEC. 3149) SHALL BE INCIDENTAL.

CONSTRUCTION NOTES

- CONSTRUCTION SHALL BE GOVERNED BY THE MNDOT STANDARD SPECIFICATIONS, CITY OF DULUTH STANDARD CONSTRUCTION SPECIFICATIONS AND SPECIAL PROVISIONS.
- THE CONTRACTOR SHALL BE RESPONSIBLE FOR IMPLEMENTATION OF THE SWPPP AND THE INSTALLATION, INSPECTION, AND MAINTENANCE OF THE EROSION AND SEDIMENT CONTROL BMPS BEFORE AND DURING CONSTRUCTION.
- THE CONTRACTOR SHALL KEEP WRITTEN INSPECTION AND MAINTENANCE LOGS (INCLUDING ALL CLEAN OUT AND CORRECTIVE ACTIONS) IN ACCORDANCE WITH THIS SWPPP AND ALL PERMITS.

TMDL IMPLEMENTATION PLANS CONTAINING STORM WATER REQUIREMENTS
NO TMDL IMPLEMENTATION PLANS CURRENTLY EXIST FOR THE RECEIVING WATERS ON THIS PROJECT.
THE ST. LOUIS RIVER IS LOCATED ?? MILES FROM THE PROJECT AND IS AN MPCA LISTED IMPAIRED WATER.

LOCATION OF SWPPP REQUIREMENTS IN PROJECT PLAN

DESCRIPTION	TITLE	LOCATION
SUMMERY OF PERVIOUS & IMPERVIOUS	SWPPP	SHEET XX
DIRECTION OF FLOW/DRAINAGE AREA	PLAN	SHEETS XX-XX
RECEIVING SURFACE WATERS	PLAN	SHEETS XX-XX
NO DISTURBANCE AREAS & AREAS OF CONSTRUCTION	SWPPP	SHEETS XX-XX
DRAINAGE STRUCTURES	PLAN & PROFILE	SHEETS XX-XX
DRAINAGE TABULATIONS	DRAINAGE CHART	SHEETS XX-XX
EROSION CONTROL TABULATIONS	TABULATIONS	SHEETS XX-XX
EROSION CONTROL SHEETS	PLAN	SHEETS XX-XX
EROSION CONTROL DETAILS	DETAILS	SHEETS XX-XX
SEDIMENT CONTROL PRACTICES	SWPPP	SHEETS XX-XX
FINAL STABILIZATION	TABULATION	SHEETS XX-XX
SEDIMENT BASIN (POND) TABULATIONS	DRAINAGE	SHEETS XX-XX
POND SHEETS (SEDIMENT BASINS	DRAINAGE	SHEETS XX-XX
LOCTION OF PONDS	DRAINAGE	SHEETS XX-XX

SWPPP IMPLEMENTATION CONTACTS

AGENCY	PERMIT	NAME	PHONE/E-MAIL
CONTRACTOR'S EROSION CONTROL SUPERVISOR		TO BE DETERMINED	TBD
MPCA	NPDES	JIM DEXTER	(218)529-6253 james.dexter@pcs.state.mn.us
SWCD	WCA	RC BOHEIM	(218)723-4629 RC.Boheim@southstlouisswcd.org
MNDNR WATERS AREA HYDROLOGIST	N/A	PATRICIA FOWLER	(218)834-6621 patricia.fowler@dnr.state.mn.us
CORPS OF ENGINEERS	SECTION 404	DARYL WIERZBINSKI	218-834-6630 daryl.w.wierzbinski@mvp02.usa.ce.army.mil
STATE DUTY OFFICER	N/A	MPCA	800-422-0798
CITY REVIEW	N/A	TOM JOHNSON	(218) 730-5103 tajohnson@duluthmn.gov
LGU-CITY OF DULUTH	N/A	KYLE DEMING	(218)730-5580 kdeming@duluthmn.gov
CITY OF DULUTH SOLID WASTE OFFICER	N/A	KAREN ODONNELL	(218)730-5148 kodennell@duluthmn.gov

I:\PWU\ENGINEER\CAD\DETAILS\EROSION CONTROL SWPPP SHEETS_recover.dwg Thursday, January 29, 2015 2:28:33 PM

EROSION CONTROL NOTES

1. MNDOT STANDARD SPECIFICATIONS FOR CONSTRUCTION SHALL APPLY. ALONG WITH THE (A.) CITY OF DULUTH OR (B.) DEVELOPER, THE CONTRACTOR WILL BE CO-PERMITEE FOR THE MPCA NPDES STORM WATER CONSTRUCTION PERMIT FOR THIS PROJECT – CONTRACTORS SIGNATURE ON PERMIT IS REQUIRED.
   - 1.1. SUBMIT INITIAL EROSION CONTROL (EC) SCHEDULE AT OR BEFORE THE PRECONSTRUCTION CONFERENCE.
   - 1.2. SUBMIT EC SCHEDULE ALTERATIONS/ADJUSTMENTS WEEKLY THEREAFTER FOR ENGINEER'S APPROVAL.
2. THE CONTRACTOR IS RESPONSIBLE FOR EROSION CONTROL QUALITY CONTROL (WC) ON THIS PROJECT. CONTRACTOR SHALL PHASE/SEQUENCE THE PROJECT TO MINIMIZE EXPOSURE TO EROSION. CONTRACTOR SHALL PLACE OR OTHERWISE CONSTRUCT EROSION CONTROL AND SEDIMENT CONTAINMENT DEVICES TO MINIMIZE THE RUNOFF, TRACKING, AND SEDIMENT LOSS FROM DISTURBED AREAS OF THE PROJECT SITE.
3. DISTURBED SLOPES NOT ACTIVELY WORKED SHALL BE PROTECTED FROM SOIL EROSION WITH TEMPORARY OR PERMANENT COVER WITHIN 3 DAYS OF BEING WORKED. EROSION CONTROL BLANKET AND SOIL STAPLES SHALL BE USED.
4. AT MINIMUM, THE FOLLOWING CONTROLS WILL BE IMPLEMENTED AT THE CONSTRUCTION SITE:
   - 4.1. EROSION CONTROL BLANKETS SHALL BE USED ON ALL SLOPES 1:3 OR STEEPER
   - 4.2. SILT FENCES SHALL BE USED IN CONJUNCTION WITH OTHER EROSION BMPS
   - 4.3. ROCK DITCH CHECKS OR APPROVED EQUAL ARE TO BE USED TO REDUCE DITCH VELOCITIES AND REDUCE EROSION
   - 4.4. STORM INLET AND OUTLET AREAS SHALL BE CONTINUOUSLY PROTECTED WITH MNDOT APPROVED DEVICES/METHODS
   - 4.5. STABILIZED CONSTRUCTION ENTRANCE, OR REUSABLE MUD MAT SHALL BE USED TO REDUCE SEDIMENT TRACKING
   - 4.6. PERMANENT VEGETATION WILL BE ESTABLISHED RIGHT AFTER TOPSOIL IS SPREAD
   - 4.7. CONTROL ALL SITE SOLID WASTE, DEBRIS, MATERIAL STORAGE AND CONCRETE WASHOUT ON SITE. NO MIGRATION OFFSITE OR INTO DITCHES/STORM SYSTEMS PERMITTED
5. ALL SLOPES AND DITCHES SHALL BE STABILIZED PRIOR TO OPENING NEW CULVERTS INTO EXISTING DRAINAGE WAYS.
6. IF ANY STOCKPILE IS TO REMAIN IN PLACE FOR MORE THAN 3 DAYS SEDIMENT AND EROSION CONTROL DEVICES SHALL BE USED.
7. WATER PUMPED OR OTHERWISE DISCHARGED FROM THE SITE DURING CONSTRUCTION DEWATERING SHALL BE DIRECTED THROUGH EFFECTIVE FILTERING DEVICE(S) IN ACCORDANCE WITH MNDOT SPECIFICATION 2573. USE OF APPROVED FLOCCULANT MAY BE NECESSARY.
8. THE CONTRACTOR SHALL TAKE ALL POSSIBLE PRECAUTIONS TO PREVENT APPRECIABLE SOIL TRACKING ONTO ROADWAYS. APPRECIABLE SOIL, MUD, OR DEBRIS WASHED, TRACKED, OR DEPOSITED ONTO PAVED SURFACES SHALL BE REMOVED PRIOR TO THE END OF EACH WORK DAY.
9. STABILIZED CONSTRUCTION ENTRANCE(S) SHALL BE REMOVED AND AREA RESTORED AFTER GRADING IS COMPLETE.
10. THE CONTRACTOR QC PROGRAM SHALL ENSURE THAT A COMPETENT INDIVIDUAL SHALL INSPECT EROSION AND SEDIMENT CONTROL DEVICES WEEKLY AND AFTER EACH RAIN EVENT. ALL NONFUNCTIONAL DEVICES SHALL BE REPAIRED/REPLACED/CLEANED. MAINTAIN WRITTEN LOG OF ALL WEEKLY AND RAIN EVENT INSPECTIONS – INCLUDE THE CORRECTIVE ACTIONS THAT WERE TAKEN.
11. THE CONTRACTOR SHALL MAINTAIN THE CAPABILITY TO IMPLEMENT RAPID STABILIZATION METHOD 4 (MNDOT 2573.4) AT ALL TIMES. INCLUDES CAT III EROSION CONTROL BLANKED (ECB) [N. AMERICAN GREEN S150 OR APPROVED EQUAL] ALONG WITH SEED MIXTURE, FERTILIZER, AND SOIL STAPLES PER 2573-3. THE UPGRADE END OF EACH BLANKET STRIP SHALL BE BURIED AT LEAST 6 INCHES IN A VERTICAL CHECK SLOT. STAPLES SHALL BE PLACED AT SEAMS AND THROUGHOUT THE BLANKET AT A MAXIMUM SPACING IN ALL DIRECTIONS OF 2 FEET. PAYMENT ALLOWED SHALL BE PER CONTRACT OR IN ABSENCE OF CONTRACT BID PRICE IN ACCORDANCE WITH MNDOT SPECIFICATION 2575.5
12. THE CONTRACTOR SHALL BE PROACTIVE IN THEIR APPROACH TO MINIMIZING SOIL EROSION AND SEDIMENT TRANSPORT FROM THE SITE. CURRENT TECHNOLOGY FOR WEATHER FORECASTING AND WEATHER RADAR ALLOWS FOR THE CONTRACTOR TO HAVE EROSION CONTROL BMPS INSTALLED AND FUNCTIONING FOR A RAIN EVENT. ALL CONSTRUCTION SITES SHALL BE PREPARED FOR A RAIN EVENT DURING NON-WORK TIMES, I.E. WEEK NIGHTS AND WEEKENDS.
13. AS SITE CONDITIONS CHANGE, THE WORK PROGRESSES AND WEATHER CONDITIONS VARY, THE CONTRACTOR SHALL BE REACTIVE TO THESE CHANGING VARIABLES.. THEREFORE BMP INSTALLATION, CLEANING AND RELOCATION SHOULD BE ANTICIPATED IN MOST CONSTRUCTION ACTIVITIES.

CONSTRUCTION PRACTICES TO MINIMIZE STORM WATER CONTAMINATION

TO PREVENT STORM WATER CONTAMINATION FROM OCCURRING, THE FOLLOWING BMPS WILL BE IMPLEMENTED:

1. ALL AREAS THAT ARE ROUGH GRADED MUST BE KEPT IN A SMOOTH CONDITION TO ALLOW SHEET FLOW OF STORM WATER WHEREVER PRACTICAL AND ALWAYS READY FOR SURFACE APPLICATION OF DEGRADABLE OR NON-DEGRADABLE BLANKETS, MULCH, OR OTHER PROTECTIVE COVERS.
2. A STABILIZED CONSTRUCTION ENTRANCE/EXIT WILL BE CONSTRUCTED TO REDUCE VEHICLE TRACKING OF SEDIMENTS OFF THE PROJECT RIGHT OF WAY.
3. ALL SOLID WASTE MATERIALS WILL BE COLLECTED AND STORED IN A SECURELY LIDDED METAL DUMPSTER OR OTHER APPROVED CONTAINMENT METHOD AT THE END OF EACH DAY. ANY ALTERNATIVE TO A METAL DUMPSTER MUST BE SUBMITTED IN WRITING FOR APPROVAL BY THE PROJECT ENGINEER. ALL TRASH AND CONSTRUCTION DEBRIS FROM THE SITE WILL BE DEPOSITED IN THE DUMPSTER. THE DUMPSTER WILL BE EMPTIED AS NECESSARY TO FUNCTION AS INTENDED FOR DEBRIS COLLECTION. NO CONSTRUCTION MATERIALS WILL BE BURIED ON-SITE. THE CONTRACTOR'S EROSION CONTROL SUPERVISOR WILL INSTRUCT ALL PERSONNEL REGARDING THE CORRECT PROCEDURE FOR DISPOSAL.
4. RECYCLABLE MATERIALS MUST BE SEPARATED ON-SITE AND SEGREGATED IN DESIGNATED CONTAINERS.
5. A LICENSED SANITARY WASTE MANAGEMENT CONTRACTOR WILL COLLECT ALL SANITARY WASTE FROM THE PORTABLE UNITS AT A RATE NECESSARY TO MAINTAIN DESIGNED FUNCTION.
6. ALL VEHICLES ON SITE WILL BE MONITORED FOR LEAKS AND RECEIVE REGULAR PREVENTIVE MAINTENANCE TO REDUCE THE CHANCE OF LEAKAGE.
7. FERTILIZERS WILL BE STORED IN A COVERED SHED AND PARTIALLY USED BAGS WILL BE TRANSFERRED TO A SEALABLE BIN TO REDUCE THE CHANCE OF SPILLAGE.
8. PETROLEUM PRODUCTS WILL BE STORED IN TIGHTLY SEALED CONTAINERS, WHICH ARE CLEARLY LABELED.
9. SPILL KITS WILL BE INCLUDED WITH ALL FUELING SOURCES AND MAINTENANCE ACTIVITIES. SECONDARY CONTAINMENT MEASURES WILL BE INSTALLED AND MAINTAINED BY THE CONTRACTOR.
10. ANY ASPHALT SUBSTANCES USED ON SITE WILL BE APPLIED IN ACCORDANCE WITH MANUFACTURERS RECOMMENDATIONS.
11. ALL PAINT CONTAINERS AND CURING COMPOUNDS WILL BE TIGHTLY SEALED AND STORED WHEN NOT REQUIRED FOR USE. EXCESS PAINT WILL NOT BE DISCHARGED TO THE STORM WATER SYSTEM BUT WILL BE PROPERLY DISPOSED OF ACCORDING TO MANUFACTURER'S INSTRUCTION.
12. MATERIALS AND EQUIPMENT NECESSARY FOR SPILL CLEAN-UP SHALL BE READILY AVAILABLE AND BE KEPT IN AN ENCLOSED TRAILER OR SHED ON SITE. EQUIPMENT WILL INCLUDE, BUT NOT LIMITED TO, BROOMS, MOPS, DUST PANS, RAGS, GLOVES, GOGGLES, ABSORBENT (KITTY LITTER, OIL ABSORBENT BOOMS AND DIAPERS) AND BUCKETS.
13. ALL SPILLS WILL BE CONTAINED AND CLEANED UP IMMEDIATELY UPON DISCOVERY. SPILLS LARGE ENOUGH TO REACH THE STORM WATER CONVEYANCE SYSTEM WILL BE REPORTED TO THE MINNESOTA DUTY OFFICER AT 1-800-422-0798.
14. CONCRETE TRUCKS WILL NOT BE ALLOWED TO WASH OUT OR DISCHARGE SURPLUS CONCRETE OR DRUM WASH WATER ON THE SITE UNLESS DONE IN AN ENGINEERED CONTAINMENT SYSTEM. THE ENGINEERED SYSTEM MUST INCLUDE SITE DRAWINGS FOR THE PROJECT FILE AND WRITTEN ASSURANCE THAT THE SYSTEM WILL WORK AS DESIGNED AND LEAVE NO DISCHARGE OF CONCRETE OR CONCRETE RESIDUE POTENTIAL TO ENTER WATERS OF THE STATE.
15. FORM RELEASE OIL USED FOR CONCRETE WORK MUST BE APPLIED OVER A PALLET CONTAINING ABSORBENT TO COLLECT EXCESS LIQUID. THE ABSORBENT MATERIAL WILL BE REPLACED AND PROPERLY DISPOSED OF WHEN SATURATED.
16. DISCHARGES FROM BASIN DEWATERING OPERATIONS THAT ARE TURBID OR SEDIMENT LADEN SHALL BE DISCHARGED TO TEMPORARY SEDIMENT BASINS CONSTRUCTED ON THE SITE TO PROVIDE TREATMENT PRIOR TO DISCHARGE TO A WATER OF THE STATE.

APPENDIX L
MS4 Statement of Compliance

City of Duluth
DEPARTMENT OF PUBLIC WORKS/UTILITIES
Engineering Division
211 City Hall • Duluth MN 55802
(218) 730-5200 Fax: (218) 730-5907

THIS EXAMPLE DOCUMENT WILL BE DRAFTED BY THE CITY FOR EACH PROJECT, TO BE REVIEWED AND SIGNED BY THE OWNER AND THEIR ENGINEER WHO DESIGNED THE STORMWATER SYSTEM.

Stormwater Management - MS4 Statement of Compliance, *May 2014*

Applicant / Address: *Developer A, 123 Main St. Duluth, MN 55802*
Project Location: *123 Main St*

Project Summary:
Short Narrative of project, including project scope, phasing, areas of disturbance/pervious/imperivous.

Stormwater Management Plan -Temporary The project disturbance size will require a City of Duluth Erosion Control Permit and MPCA CA Permit. The permit will require the project to prevent erosion and control sediment from leaving the site, this plan shall be implemented prior to the construction project disturbing the site and adjustments shall be made as needed. The site will be subject to inspection by the City of Duluth and MPCA for compliance to erosion and sediment control requirements.

(Add additional verbiage for special site constraints or challenges i.e. trout stream, slopes,…)

Permanent Stormwater Management BMPs.
Narrative on permanent stormwater BMPs, and expected treatment levels, rate and volume controls, and a description of the BMP types and configuration and special features.

The proposed Stormwater Management BMPs will be required to be constructed per plan, any change in the proposed work or construction of additional impervious surfaces on the site will require additional stormwater / drainage review and approval. An As-Built Survey and full inspection will be required of the stormwater BMPs/infrastructure to verify that they are constructed per plan and supplied to the City per engineering standards.

The land Owner is responsible for all ongoing operations and maintenance (per design documents) and annual inspection and periodic reports in perpetuity as required for by the MPCA-MS4 Permit and NPDES Federal Permit authorized under the Clean Water Act.

As applicant I understand the above requirements.

_____	_____	_____
Owner's Representative	Date	Telephone #
_____	_____	_____
Owner's Engineer (*Best Engineering*)	Date	Telephone #

(Certifying stormwater management BMPs are built per plan and providing record drawings to City)

Released for Construction:_____

Tom Johnson, P.E.	DATE
City of Duluth, Project Engineer	File: Project No. 4567

Please sign document and return with Stormwater Management Review Fee of **$500.00**
(Stormwater management fee based on new / redev impervious surfaces: $250 < 1ac, $500 1ac to 5 ac, $750 > 5 ac)

APPENDIX M
Example: City of Duluth – Plan Sheet – Title Page

CITY OF DULUTH

DEPARTMENT OF PUBLIC WORKS AND UTILITIES
ENGINEERING DIVISION

CONSTRUCTION PLANS FOR:

??

CITY PROJECT NO. **??**

PLAN LEGEND

RIGHT OF WAY LINE
DITCH CENTERLINE
FENCE LINE
RETAINING WALL
GRAVEL LINE
GUARD RAIL LINE
RAILROAD TRACK LINE
ROAD CENTERLINE
TREE LINE
STREAM LINE
WETLAND LINE
EX SANITARY LINE
PR SANITARY LINE — SAN
AB SANITARY LINE — AB-SAN
EX FORCEMAIN LINE — FM
PR FORCEMAIN LINE — FM
AB FORCEMAIN LINE — AB-FM
EX STORM LINE
PR STORM LINE — ST
AB STORM LINE — AB-ST
EX WATER LINE — W
PR WATER LINE — W
AB WATER LINE — AB-W
EX GAS LINE — GAS
PR GAS LINE — GAS
AB GAS LINE — AB-GAS
EX STEAM LINE
EX STEAM LINE — AB-STEAM
UG CABLE TV LINE — UGTV
AB CABLE TV LINE — AB-CATV
UG ELECTRIC LINE — UGE
AB ELECTRIC LINE — AB-ELEC
UG FIBEROPTIC LINE — FO
AB FIBEROPTIC LINE — AB-FO
UG TELEPHONE LINE — UGT
AB TELEPHONE LINE — AB-TELE
OH ELECTRIC LINE — OHE
OH TELEPHONE LINE — OHT
OH CABLE TV LINE — OHTV

SYMBOLS

EX SANITARY MANHOLE — SAN
EX SANITARY CLEANOUT
EX STORM MANHOLE — STRM
EX STORM CATCHBASIN
EX. WATER MANHOLE — W
EX. WATER VALVE — WV
EX. WATER HYDRANT
EX. WATER SHUTOFF
EX. WATER & GAS MH — W&G
EX. GAS MANHOLE — GAS
EX. GAS VALVE — GV
EX. GAS SHUTOFF
EX. STEAM MANHOLE — STEAM
EX. TELEPHONE MANHOLE — T
EX. ELECTRIC MANHOLE — E
EX. POWERPOLE
EX. LIGHT POLE
EX. ELECTRIC VAULT
EX. ANCHOR
EX. ELECTRIC TRANSFORMER — ET
EX. STREET LIGHT
EX. SIGNAL W/ STREET LIGHT
EX. HANDHOLE — H.H.
EX. HANDHOLE — H.H.
EX. TELEPHONE PEDESTAL
EX. WELL — W
BENCHMARK
FOUND CI MONUMENT
EX. SIGN
CONTROL POINT
EX DECIDUOUS TREE
EX CONIFEROUS TREE
EX. PARKING METER
EX. SOIL BORING — SB#: ?? ELEV: ??

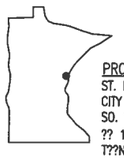

PROJECT LOCATION
ST. LOUIS COUNTY
CITY OF DULUTH
SO. ?? SEC. ?
?? 1/4 SEC. ??
T??N R??W

GOVERNING SPECIFICATIONS

THE 2014 EDITION OF THE MINNESOTA DEPARTMENT OF TRANSPORTATION "STANDARD SPECIFICATIONS FOR CONSTRUCTION" AND THE 2014 EDITION OF THE "MATERIALS LAB SUPPLEMENTAL SPECIFICATIONS FOR CONSTRUCTION" SHALL GOVERN. AVAILABLE AT:
http://www.dot.state.mn.us/pre-letting/spec/index.html

THE 2015 EDITION OF THE CITY OF DULUTH PUBLIC WORKS AND UTILITIES DEPARTMENT STANDARD CONSTRUCTION SPECIFICATIONS AND SUPPLEMENTS OR ADDENDUMS SHALL APPLY.
AVAILABLE AT:
http://www.duluthmn.gov/engineering/standard-construction-specifications/

THE SUBSURFACE UTILITY INFORMATION IN THIS PLAN IS UTILITY LEVEL D. THIS QUALITY LEVEL WAS DETERMINED ACCORDING TO THE GUIDELINES OF CI/ASCE 38-02, ENTITLED "STANDARD GUIDELINES FOR THE COLLECTION AND DEPICTION OF EXISTING SUBSURFACE UTILITY DATA".

WARNING:
LOCATION OF UNDERGROUND UTILITIES TO BE VERIFIED BY CONTRACTOR. CALL BEFORE DIGGING. GOPHER STATE ONE CALL 1-800-252-1166 REQUIRED BY LAW

INDEX

SHEET NO.	DESCRIPTION
1	TITLE SHEET
2	STATEMENT OF ESTIMATED QUANTITIES
??	??
??	??
??	??
??	??
??	??

THIS PLAN CONTAINS **#** SHEETS

I HEREBY CERTIFY THAT THIS PLAN WAS PREPARED BY ME OR UNDER MY DIRECT SUPERVISION AND THAT I AM A DULY LICENSED PROFESSIONAL ENGINEER UNDER THE LAWS OF THE STATE OF MINNESOTA.

??
PROJECT ENGINEER (TYPED OR PRINTED NAME)

PROJECT ENGINEER — DATE — ?? LIC. NO.

CITY APPROVAL

APPROVED — CHIEF ENGINEER OF TRANSPORTATION — DATE

APPROVED — CHIEF ENGINEER OF UTILITIES — DATE

APPROVED — CITY ENGINEER — DATE

APPENDIX N
Water Main Check-off List

Water Check off list to Final Main Extension Projects

Project Location: _____

Contractor: _____

Consultant: _____

Inspector: _____

Item	Responsibility
1. Water mains passed bacteriological test Date: _____ Inspected By: _____	City Engineering
2. Water mains passed pressure test Date: _____ Inspected By: _____	Consultant or Engineering
3. Confirm position of water & gas valves, on or off, as required Date: _____ Inspected By: _____	Consultant & Operations
4. Water & Gas valves checked for operation and grade Date: _____ Inspected By: _____	Consultant & Operations
5. Water curb boxes located, checked, adjusted to grade and marked Date: _____ Inspected By: _____	Consultant & Contractor
6. Hydrants checked if extension needed and installed, hydrant marker installed, hydrant facing proper direction, tracing wire brought to grade where applicable, vented cap installed where applicable Date: _____ Inspected By: _____	Consultant & Contractor
7. Water main is accepted by City Engineering Date: _____ Inspected By: _____	City Engineering

Notes:

A – It is the designated project inspector's responsibility to insure that the check off list is complete before last payment to contractor is made.

B – Project inspector to provide City Engineering with: record plan as related to Water main construction, copies of inspector's notes relating to same, completed hydrant record forms, completed valve record forms, and completed service record forms.

C – City Engineering to provide Utility Operations with copy of completed check off list.

D – City Engineering to provide Fire Department with location of all new or moved hydrants.

APPENDIX O
Water Valve, Hydrant and Service Installation Records

City of Duluth Public Works & Utilities

WATER VALVE INSTALLATION RECORD

VALVE NUMBER		DATE	
DPW&U PROJECT NUMBER		INSPECTOR	
PROJECT DESCRIPTION			

LOCATION OF VALVE MUST BE PROVIDED THROUGH BOTH OF THE FOLLOWING:

- **GPS VALVE LOCATIONS** Survey data must be provided in the form of an electronic CSV file.
- **TAPED OUT VALVE MEASUREMENTS** Measurement from road centerline must be included.

TIES					ST/AVE
TIES					ST/AVE
TIES					ST/AVE

ADDITIONAL REQUIRED INFORMATION

VALVE SIZE		HOUSED	
MANUFACTURER/MODEL		NUMBER OF TURNS	
VALVE TYPE			
KEY SIZE		VALVE LEFT OPEN	

Remarks:

City of Duluth Public Works & Utilities

HYDRANT INSTALLATION RECORD

Note: A valve sheet for the hydrant valve must also be completed

HYDRANT NUMBER		DATE	
DPW&U PROJECT NUMBER		INSPECTOR	
PROJECT DESCRIPTION			

LOCATION OF VALVE MUST BE PROVIDED THROUGH BOTH OF THE FOLLOWING:

- **GPS VALVE LOCATIONS** Survey data must be provided in the form of an electronic CSV file.
- **TAPED OUT VALVE MEASUREMENTS** Measurement from road centerline must be included.

TIES				ST/AVE
TIES				ST/AVE
TIES				ST/AVE

ADDITIONAL REQUIRED INFORMATION

BURY DEPTH		VENT CAP	
DRAIN PLUG INSTALLED		NOZZLE HEIGHT	
COARSE AGGREGATE			
MAKE		MODEL NO.	

Remarks:

City of Duluth Public Works & Utilities

WATER SERVICE INSTALLATION RECORD

DPW&U PROJECT #		PROJECT TITLE					
WATER SERVICE SIZE			MATERIAL			DATE	
ADDRESS							
LOT		BLOCK		SUBDIVISION			
INSPECTOR		COMPANY			CONTRACTOR		

WATER SERVICE INFORMATION

SIZE OF MAIN		LOCATION OF MAIN (STREET NAME)					
CENTER OF MAIN TO SHUT OFF						INSULATED?	
COVER AT SHUT OFF		COVER AT MAIN		LEAST COVER			

TAPED OUT MEASUREMENTS (BUILDING TIES) ARE REQUIRED:

SHUTOFF		FT OUT FROM BLDG, TIES ARE OFF				LINE OF HOUSE, GARAGE	
SHUTOFF		FT		FROM		LINE OF BUILDING	
SHUTOFF LOCATION							
CENTER OF STREET TO SHUTOFF				Ft (required)			

REMARKS:

APPENDIX P
Duluth Sanitary Sewer Wye Record

City of Duluth Public Works & Utilities

SANITARY SEWER WYE RECORD

DPW&U PROJECT #		DATE		INSPECTOR	
PROJECT DESCRIPTION					
ADDRESS (must provide if available)					
PARCEL ID (if address not available)		LOT		BLOCK	
	SUBDIVISION				

SANITARY WYE INFORMATION

MAIN SIZE		LOCATION OF MAIN			
MAIN MATERIAL		SIDE OF LINE			
*Add remarks if connected to existing brick arch					
WYE MATERIAL		WYE SIZE		LOCATING WIRE	

LOCATION OF SANITARY SEWER WYE MUST BE PROVIDED THROUGH ONE OF THE FOLLOWING:

- **GPS LOCATION** Survey data must be provided in the form of an electronic CSV file.
- **TAPED OUT MEASUREMENTS**

Distance to Downstream Manhole		feet from manhole number	
Distance to Upstream Manhole		feet from manhole number	

Remarks: