GENERAL NOTES

1. CONTRACTOR SHALL PROVIDE DETAILED SHOP DRAWINGS. THE SHOP DRAWINGS SHALL CLEARLY SHOW LOCATION OF ALL CATV EQUIPMENT, SIZE, QTY, AND PORT USAGE. THE DRAWINGS INDICATE SCHEMATIC LAYOUT. PROVIDE ADDITIONAL RACKS AND OTHER ACCESSORIES REQUIRED TO PROVIDE A COMPLETE AND OPERATIONAL SYSTEM.
2. ROUTE COAX CABLES SHOWN ON PLANS WITH "TV" SYMBOL TO CATV ENCLOSURE. TERMINATE WITH "F" STYLE COMPRESSION FITTINGS AND LABEL. CONNECT TO CATV SPLITTER/TAP AS NEEDED. PROVIDE CABLE MANAGEMENT INSIDE ENCLOSURE FOR CABLE DROPS.
3. CATV SYSTEM SHALL BE DESIGNED FOR 5–1000MHz PASSIVE AND 860 MHZ ACTIVE OPERATION.
4. OWNER TO PURCHASE SERVICE FROM LOCAL CATV PROVIDER. COORDINATE SYSTEM PERFORMANCE WITH CATV PROVIDER.
5. SYSTEM SHALL BE LAID OUT SUCH THAT FUTURE CHANNEL FILTERS AND RF MODULATORS CAN BE ADDED AT A FUTURE DATE.
6. SUBMIT RF TEST REPORTS TO A/E AFTER SYSTEM HAS BEEN INSTALLED. TEST REPORTS SHALL BE PERFORMED ON ALL CHANNELS, FORWARD AND REVERSE. TESTS SHALL BE FOR DIGITAL AND ANALOG SIGNAL. TESTS SHALL INCLUDE CHANNEL AVERAGE POWER, IN–CHANNEL NOISE, ENHANCED SPECTRAL ANALYSIS AND INGRESS.
7. CONNECTION TO PUBLIC ADDRESS SPEAKER ZONES SHALL BE PERFORMED BY PUBLIC ADDRESS INTEGRATOR.
8. CONTRACTOR SHALL PROVIDE TYPE WRITTEN LABELS ON ALL CABLES AT EACH END. CONTRACTOR SHALL PROVIDE TYPE WRITTEN LABELS ON ALL CABINETS/ENCLOSURES, DEVICES AND DEVICE PORTS.
9. CONTRACTOR SHALL PROVIDE 12 MONTHS FULL MAINTENANCE BY SKILLED CATV SYSTEM INSTALLER, INCLUDING QUARTERY ADJUSTING AS REQUIRED FOR OPTIMUM SYSTEM PEROFMANCE.
10. CATV DISTRIBUTION SYSTEM COMPONENTS SHALL BE MANUFACTURED BY BLONDER TONGUE, CHANNEL MASTER, CANARE CORP, LEVITON, MOTOROLA, SCIENTIFIC–ATLANTA OR APPROVED EQUAL.
11. PROVIDE 75 OHM TERMINATION ON ALL UNUSED COAX PORTS.

CATV PERFORMANCE REQUIREMENTS:

MINIMUM ACCEPTABLE PERFORMANCE OF DISTRIBUTION SYSTEM AT ALL USER–INTERFACE POINTS SHALL BE AS FOLLOWS:

1. RF VIDEO–CARRIER LEVEL: BETWEEN 3 AND 12 DBMV.
2. RELATIVE VIDEO–CARRIER LEVEL: WITHIN 3 DB TO ADJACENT CHANNEL.
3. CARRIER LEVEL STABILITY, SHORT TERM: LEVEL SHALL NOT CHANGE MORE THAN 0.5 DB DURING A 60–MINUTE PERIOD.
4. CARRIER LEVEL STABILITY, LONG TERM: LEVEL SHALL NOT CHANGE MORE THAN 2 DB DURING A 24–HOUR PERIOD.
5. CHANNEL FREQUENCY RESPONSE: ACROSS ANY 6–MHZ CHANNEL IN THE 54MHZ TO 860MHZ FREQUENCY RANGE, REFERENCED TO VIDEO; SIGNAL AMPLITUDE SHALL BE PLUS OR MINUS 1 DB, MAXIMUM
6. CARRIER–TO–NOISE RATIO: 45 DB OR MORE.
7. RF VISUAL SIGNAL–TO–NOISE RATIO: 43 DB OR MORE.
8. ANTENNA COMBINER INSERTION LOSS: 40 DB MAXIMUM.
9. SIGNAL POWER SPLITTER AND ISOLATION TAP RETURN LOSS: 17 DB MAXIMUM.
10. CABLE CONNECTORS ATTENUATION: LESS THAN 0.1 DB.
11. CROSS MODULATION: LESS THAN MINUS 50 DB.
12. CARRIER–TO–ECHO RATIO: MORE THAN 40 DB.
13. COMPOSITE TRIPLE BEAT: LESS THAN MINUS 53 DB.
14. SECOND ORDER BEAT: LESS THAN MINUS 60 DB.
15. TERMINAL ISOLATION FROM TELEVISION TO TELEVISION: 25 DB, MINIMUM.
16. TERMINAL ISOLATION BETWEEN TELEVISION AND FM: 35 DB, MINIMUM.
17. HUM MODULATION: 2 PERCENT, MAXIMUM.
18. TILT/SLOPE: 10 DB, MAXIMUM.

NOTES:

(1) CATV DISTRIBUTION HUB W/ 16 UTP PORT OUTPUT. HUB SHALL BE RACKMOUNTED. CATV DISTRIBUTION HUB SHALL BE MUXLAB VIDEOEASE (500303). PROVIDE (5) SINGLE PORT CATV BALUNS (500302) PER LOCATION. BALUNS SHALL BE MUXLAB OR EQUAL.

(2) CATV DISTRIBUTION COAX. COAX SHALL BE 75 OHM PLENUM RATED 1/2". COAX SHALL BE COMMSCOPE 2312K OR EQUAL. TERMINATE W/ COMPRESSION "F" STYLE FITTINGS.

(3) CATV COAX. COAX SHALL BE WESTPENN 841 OR EQUAL. TERMINATE W/ COMPRESSION "F" STYLE FITTINGS.

(4) 16" X 16" X 6.62" TYPE 1 ENCLOSURE. ENCLOSURE SHALL BE HOFFMAN A16N16ALP W/ PERFORATED PANEL. PROVIDE #6 GROUND FROM ENCLOSURE TO COMM. ROOM GROUND BUS BAR. PROVIDE 1.5" EMT TO CABLE TRAY FOR DISTRIBUTION COAX.

(5) 24" X 20" X 6.62" TYPE 1 ENCLOSURE. ENCLOSURE SHALL BE HOFFMAN A24N24ALP W/ PERFORATED PANEL. PROVIDE #6 GROUND FROM ENCLOSURE TO COMM. ROOM GROUND BUS BAR. PROVIDE (3) 1.5" EMT TO CABLE TRAY FOR DISTRIBUTION COAX.

(6) CATV BROADBAND DISTRIBUTION AMPLIFIER W/ 43DB GAIN, 10DB GAIN CONTROL, 8DB SLOPE CONTROL AND INTEGRATED ACTIVE RETURN (42/54MHZ SPLIT). BROADBAND DISTRIBUTION AMPLIFIER SHALL BE BLONDER TONGUE BIDA 86B–43P (5900P84) OR EQUAL. PROVIDE 6–WAY SPLITTER ON AMPLIFIER OUTPUT. PROVIDE 8 PORT TAP (MODEL SRT–8A).

(7) CATV 8 PORT DIRECTIONAL COUPLER/TAP (MODEL SRT–8A). PROVIDE LINE EQUALIZER TO COMPENSATE FOR CABLE ATTENUATION TILT. AS REQUIRED (MODEL LE–860). CONTRACTOR SHALL DETERMINE TAP AND EQ VALUES BASED UPON SYSTEM PERFORMANCE. PROVIDE SIGNAL ATTENUATORS IF REQUIRED. OUTPUT SHALL BE 15DB.

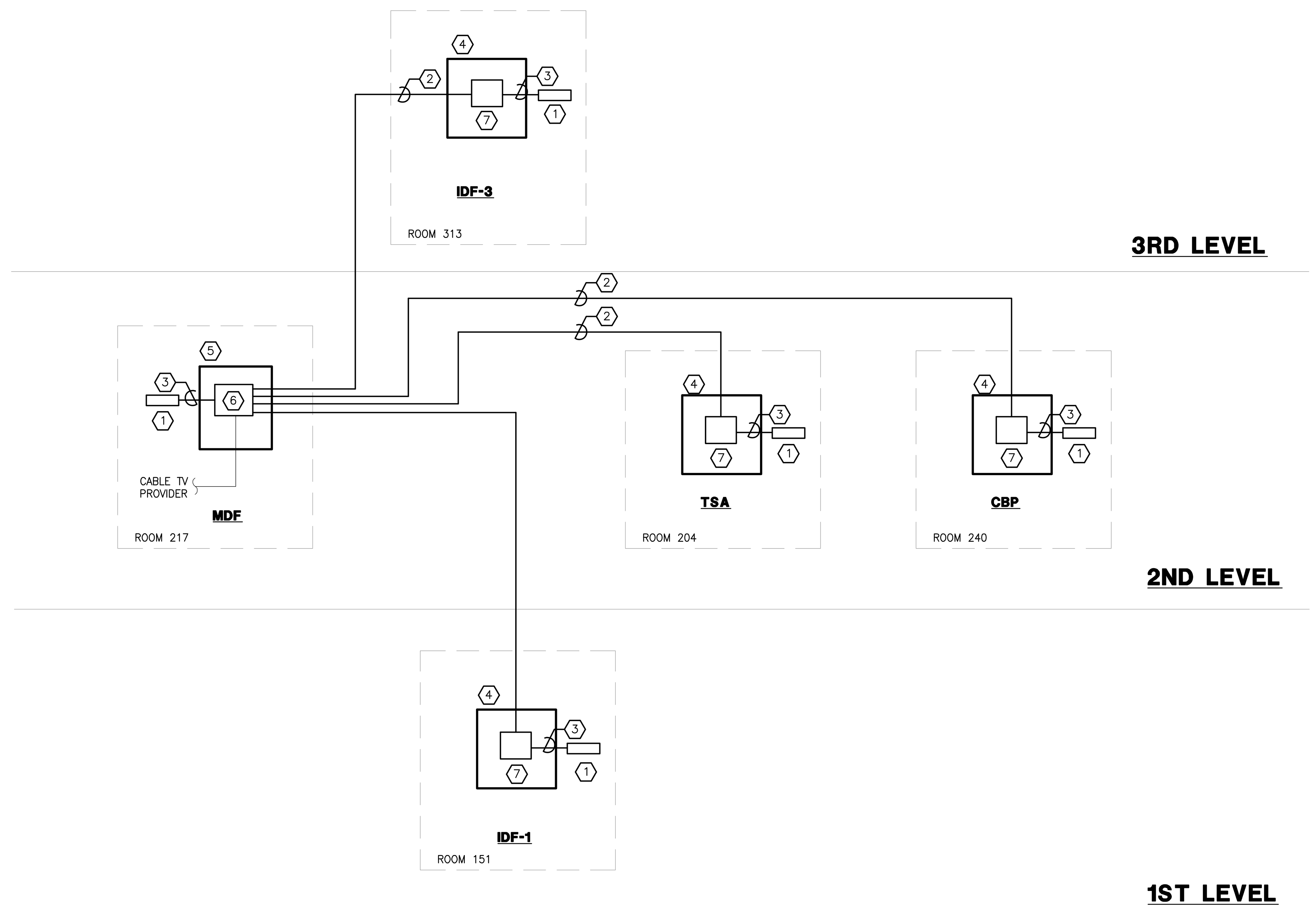

1 / ET605 CATV RISER
SCALE: NTS

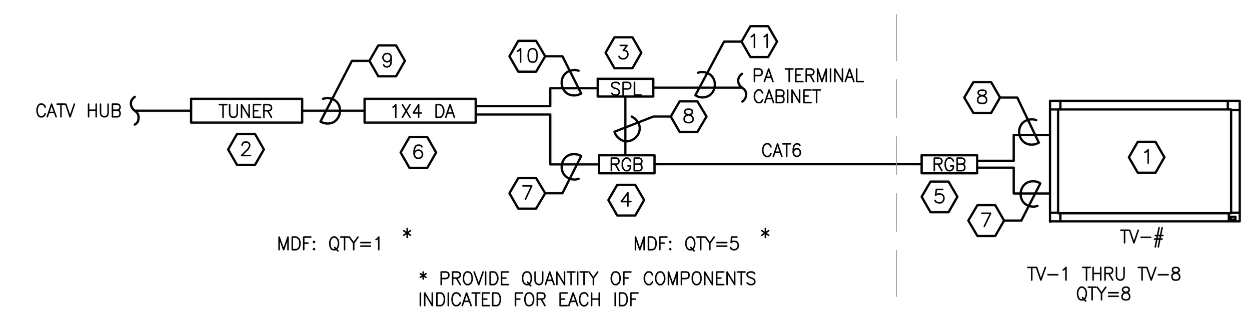

NOTES:

(1) 46" LCD MONITOR, 1920X1080 NATIVE RESOLUTION, ETHERNET CONTROL, PIP, SCHEDULING, TILE MATRIX W/ THIN BEZEL AND SPEAKER OPTION. MONITOR SHALL BE NEC P461 OR APPROVED EQUAL. CONNECT TO NETWORK SWITCH. PROGRAM LCD MONITORS TO TURN ON AND OFF BASED ON A OWNER DEFINED SCHEDULE. QUANTITY 12. SEE MOUNT DETAIL THIS SHEET.

(2) RF INTERFACE BOX WITH INTEGRATED HD TUNER. ZENITH HCS5610. PROVIDE CAT5 UTP TO COAX VIDEO BALUN. BALUN SHALL BE MUXLAB VIDEOEASE CATV BALUN II (500302). CONNECT TO UTP CATV HUB IN RACK. PROVIDE RACK SHELF & SECURE TUNER TO SHELF. LABEL WITH TV #'S CONNECTED. OWNER MAY PROVIDE CATV LEASED TUNER. IF SO CONNECT OWNER TUNER AND TURN OVER SPECIFIED TUNER TO OWNER. PROVIDE TUNER (MDF) SPLIT COMPONENT AND STEREO OUTPUT WITH DISTRIBUTION AMPLIFIER.

(3) AMBIENT LEVEL CONTROLLER W/ DUCKER CONTROL. CONTROLLER SHALL BE SYMETRIX 271 SPL COMPUTER. LABEL WITH PA ZONE CIRCUIT. PROVIDE RACK MOUNT TRAY.

(4) COMPONENT VIDEO WITH STEREO AUDIO TRANSMITTER FOR CAT6 UTP CABLING. UNIT SHALL BE MAGENTA RESEARCH MULTIVIEW T4 4–PORT TRANSMITTER OR EQUAL. PROVIDE RACK MOUNT KIT. LABEL WITH TV #'S

(5) COMPONENT VIDEO WITH STEREO AUDIO RECEIVER FOR CAT6 UTP CABLING. UNIT SHALL BE MAGENTA RESEARCH MULTIVIEW AK600DP RECEIVER OR EQUAL. COORDINATE CONNECTION TO UTP TRANSMITTER BY APPROPRIATE PA CKT, SEE TV/PA SCHEDULE. LABEL W/ TV #'S

(6) 1U RACKMOUNT 1X4 RCA COMPONENT VIDEO AND RCA STEREO AUDIO DISTRIBUTION AMPLIFIER. AMP SHALL BE IMPACT ACOUSTICS #40397 OR EQUAL.

(7) COMPONENT RCA TO HD15 BREAKOUT CABLE. HIGH QUALITY, GOLD PLATED TERMINALS.

(8) 3.5MM STEREO AUDIO TO RCA STEREO CABLE. HIGH QUALITY, GOLD PLATED TERMINALS.

(9) COMPONENT WITH STEREO RCA CABLE. HIGH QUALITY, GOLD PLATED TERMINALS.

(10) STEREO RCA CABLE TO TERMINAL STRIP. HIGH QUALITY, GOLD PLATED TERMINALS.

(11) PROVIDE AUDIO CABLE TO PUBLIC ADDRESS TERMINAL CABINET SPEAKER CIRCUIT. CABLE SHALL BE WEST PENN 25224 OR EQUAL. CONNECTION TO PUBLIC ADDRESS SPEAKER ZONES SHALL BE PERFORMED BY PUBLIC ADDRESS INTEGRATOR. MDF PROVIDE CONNECTION TO PA CIRCUITS LS GATE 1, 2, 3, 4, 5 & 6. IN LIEU OF AUDIO CIRCUIT INTERFACE CONTRACTOR MAY INTERFACE WITH PA RELAY INTERFACE IF AVAILABLE.

TV/PA CIRCUIT SCHEDULE:

TV–1 – LS GATE
TV–2 – LS GATE
TV–3 – LS GATE
TV–4 – LS GATE
TV–5 – LS GATE
TV–6 – LS GATE
TV–7 – LS GATE
TV–8 – LS GATE

3 / T6–05 PUBLIC TV RISER
SCALE: NTS

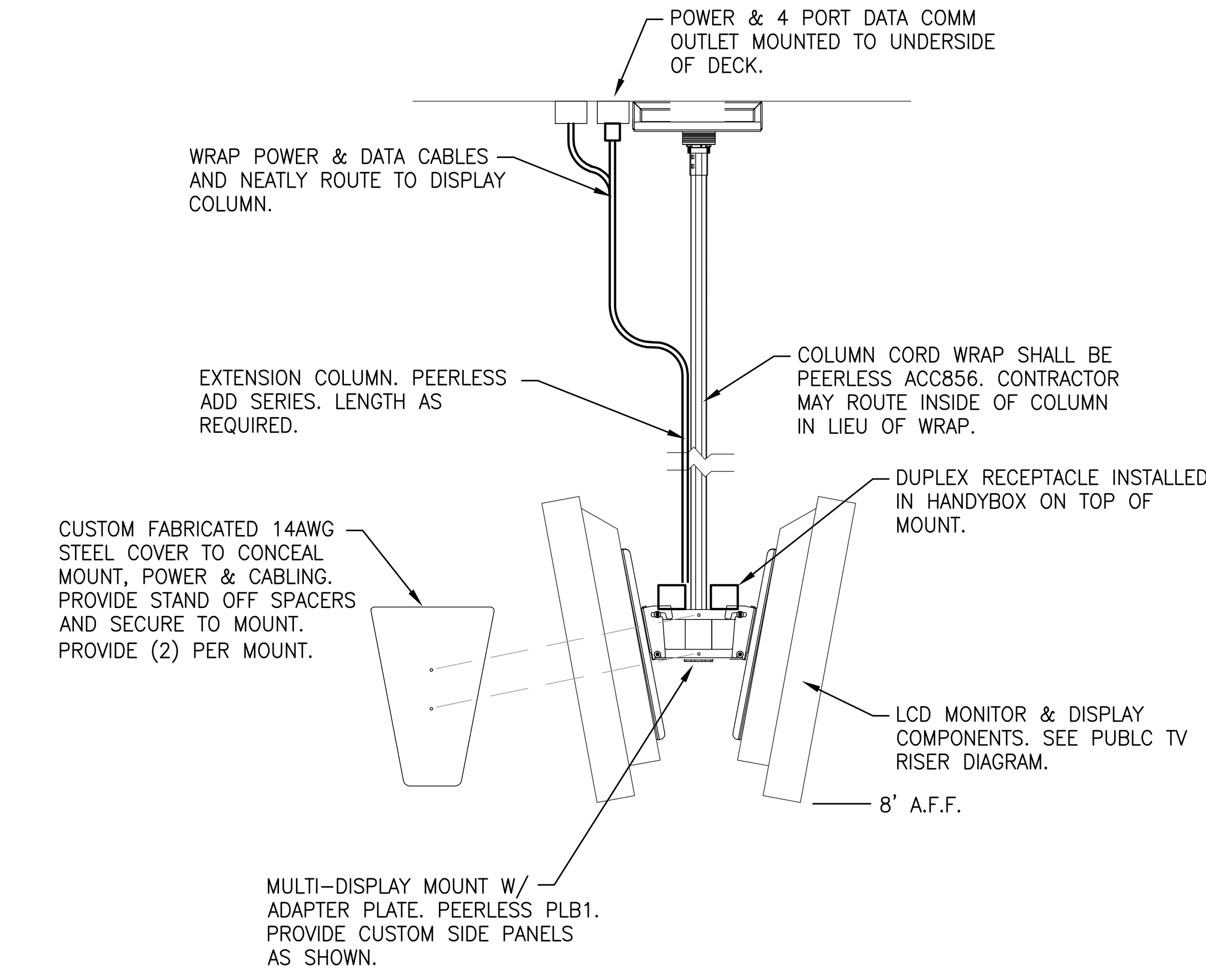

MOUNTING SYSTEM GENERAL NOTES

1. MANUFACTURER AND MODEL NUMBERS ARE USED TO ESTABLISH QUALITY AND PERFORMANCE OF THE SYSTEM. ANY EQUIPMENT THAT MEETS OR EXCEEDS THE PERFORMANCE SHALL BE CONSIDERED AND APPROVED AT THE DISCRETION OF THE ENGINEER AND/OR OWNER.
2. INSTALL PER MANUFACTURERS INSTRUCTIONS. DO NOT EXCEED WEIGHT LIMITATIONS.
3. BEAMS FOR CEILING MOUNTED DISPLAYS ARE W24 (24" DEEP) W/ A BEAM WIDTH OF 7" TO 13" AND THICKNESS OF 0.59" TO 1.09". PROVIDE PEERLESS DCT SERIES HEAVY DUTY I–BEAM CLAMP WITH DECOUPLER.
4. PROVIDE SO CORD WITH TWIST LOCK DISCONNECT AT POWER OUTLET. PROVIDE (2) DUPLEX RECEPTACLES ON TOP OF DISPLAY MOUNT AS SHOWN.
5. PROVIDE (4) 10' CAT6 PATCH CORDS FROM COMM OUTLET TO DISPLAY MOUNT.
6. PAINT ALL COMPONENTS TO MATCH CEILING/STRUCTURE. COORDINATE FINAL COLOR WITH A/E AND OWNER PRIOR TO FABRICATION.
7. BOTTOM OF MONITORS SHALL BE INSTALLED 8' A.F.F., FIELD COORDINATE FINAL HEIGHT AND TILT FOR OPTIMAL VIEW.

2 / T6–05 PUBLIC TV MOUNT DETAIL
SCALE: NTS

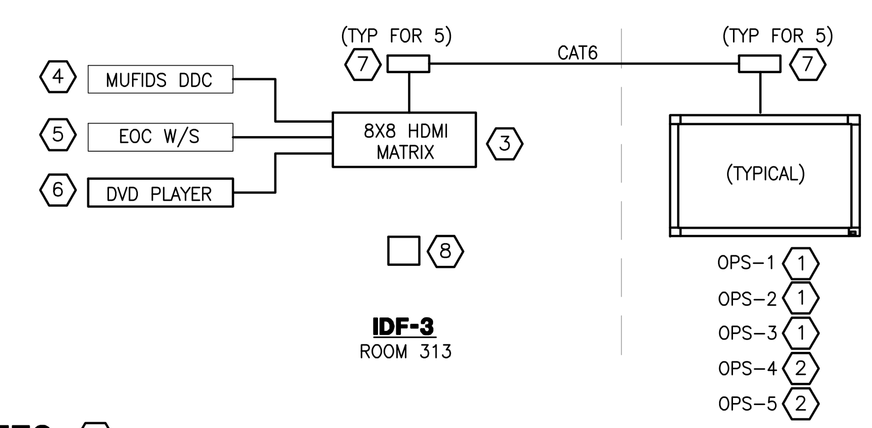

NOTES:

(1) 46" LCD MONITOR, 1920X1080 NATIVE RESOLUTION, ETHERNET CONTROL, PIP, SCHEDULING, TILE MATRIX W/ THIN BEZEL AND SPEAKER OPTION. MONITOR SHALL BE NEC P461 OR APPROVED EQUAL. CONNECT TO NETWORK SWITCH.

(2) 40" LCD MONITOR, 1920X1080 NATIVE RESOLUTION, ETHERNET CONTROL, PIP, SCHEDULING, TILE MATRIX W/ THIN BEZEL AND SPEAKER OPTION. MONITOR SHALL BE NEC P401 OR APPROVED EQUAL. CONNECT TO NETWORK SWITCH.

(3) 8 X 8 HDMI MATRIX SWITCHER WITH ETHERNET AND SERIAL CONTROL. HDMI MATRIX SWITCHER SHALL BE EXTRON DXP HDMI SERIES DXP88. PROVIDE LABELS ON EACH CONNECTION AND BUTTON. CONNECT TO NETWORK. PROVIDE WINDOWS CONTROL PROGRAM.

(4) MUFIDS DDC INTERFACE. PROVIDE DVI TO HDMI CABLES (QTY 3). SEE ET6–02 MUFIDS RISER.

(5) EOC WORKSTATION INTERFACE. PROVIDE HDMI CABLE. SEE ET6–01 SECURITY RISER.

(6) DVD PLAYER, 1080P HDMI UPSCALING, PROGRESSIVE SCAN, USB, DIVX. DVD PLAYER SHALL BE PHILIPS DVP5992 OR EQUAL. PROVIDE HDMI CABLE.

(7) HDMI AUDIO & VIDEO UTP EXTENDER. EXTENDER SHALL SUPPORT 1080P AT 150' MINIMUM. EXTENDER SHALL BE MAGENTA RESEARCH HD ONE. PROVIDE RACK MOUNTING KIT FOR TRANSMITTERS. (TYPICAL FOR 5, PROVIDE 1 SPARE)

(8) HDMI SWITCHER EXTERNAL WALL MOUNTED CONTROL PANEL. INSTALL CONTROL PANEL NEAR MONITOR LOCATION. CONTROL PANEL SHALL BE EXTRON MKP 2000 OR EQUAL. CONNECT TO NETWORK SWITCH. CONFIGURE INTEGRATED WEBSERVER FOR REMOTE ACCESS. PROVIDE (1) CONTROL PANEL IN EACH (EOC RMS 318, 319, 320, EXEC DIRECTOR RM 323, OPS RM 324).

HDMI MATRIX SCHEDULE: IDF–3

INPUTS

1. FID–29
2. FID–30
3. FID–31
4. EOC WORKSTATION
5. DVD PLAYER
6. SPARE
7. SPARE
8. SPARE

OUTPUTS

1. OPS–1
2. OPS–2
3. OPS–3
4. OPS–4
5. OPS–5
6. SPARE
7. SPARE
8. SPARE

4 / T6–05 OPS CENTER DISPLAY RISER
SCALE: NTS

WARNING: THIS RECORD CONTAINS SENSITIVE SECURITY INFORMATION THAT IS CONTROLLED UNDER 49 CFR PARTS 15 AND 1520. NO PART OF THIS RECORD MAY BE DISCLOSED TO PERSONS WITHOUT A "NEED TO KNOW", AS DEFINED IN 49 CFR PARTS 15 AND 1520, EXCEPT WITH THE WRITTEN PERMISSION OF THE ADMINISTRATOR OF THE TRANSPORTATION SECURITY ADMINISTRATION OR THE SECRETARY OF TRANSPORTATION. UNAUTHORIZED RELEASE MAY RESULT IN CIVIL PENALTY OR OTHER ACTION. FOR U.S. GOVERNMENT AGENCIES, PUBLIC DISCLOSURE IS GOVERNED BY 5 U.S.C. 552 AND 49 CFR PARTS 15 AND 1520.

RS&H
IMPROVING YOUR WORLD

Reynolds, Smith and Hills, Inc.
4525 Airport Approach Rd, Ste A
Duluth, Minnesota 55811
218-722-1227 Fax: 218-722-1052
www.rsandh.com

DULUTH AIRPORT AUTHORITY

DULUTH INTERNATIONAL AIRPORT
DULUTH, MN

NEW PASSENGER TERMINAL

CONSULTANTS

Interior Architects:
SJA ARCHITECTS
11 E Superior Street Suite 340, Duluth MN 55802
TEL: (218) 724-8578 / FAX: (218) 724-8717

Structural Engineers:
MBJ CONSULTING ENG.
501 Lake Avenue South, Suite 300, Duluth MN 55802
TEL: (218) 722-1056 / FAX: (218) 722-9306

M/E/P/FP Engineers:
COSENTINI ASSOCIATES INC.
1 South Wacker Drive, 37th Floor, Chicago IL 60606
TEL: (312) 201-7408 / FAX: (312) 201-0031

Baggage Handling Systems Consultants:
BNP ASSOCIATES INC.
101 East Ridge Office Park, Suite 103, Danbury CT 06810
TEL: (203) 792-3000 / FAX: (203) 792-4900

Landscaping Consultants:
APPOLD DESIGN
2432 East First Street, Duluth MN 55812
TEL: (218) 591-5079

SEAL

REVISIONS

NO.	DESCRIPTION	DATE

DATE ISSUED: 04-12-10
REVIEWED BY: BA
DRAWN BY: RJL
DESIGNED BY: BA

AEP PROJECT NUMBER
213-1882-091

© 2006 REYNOLDS, SMITH AND HILLS INC.

SHEET TITLE

CATV & DISPLAY RISERS

SHEET NUMBER
ET605

90% NOT FOR CONSTRUCTION

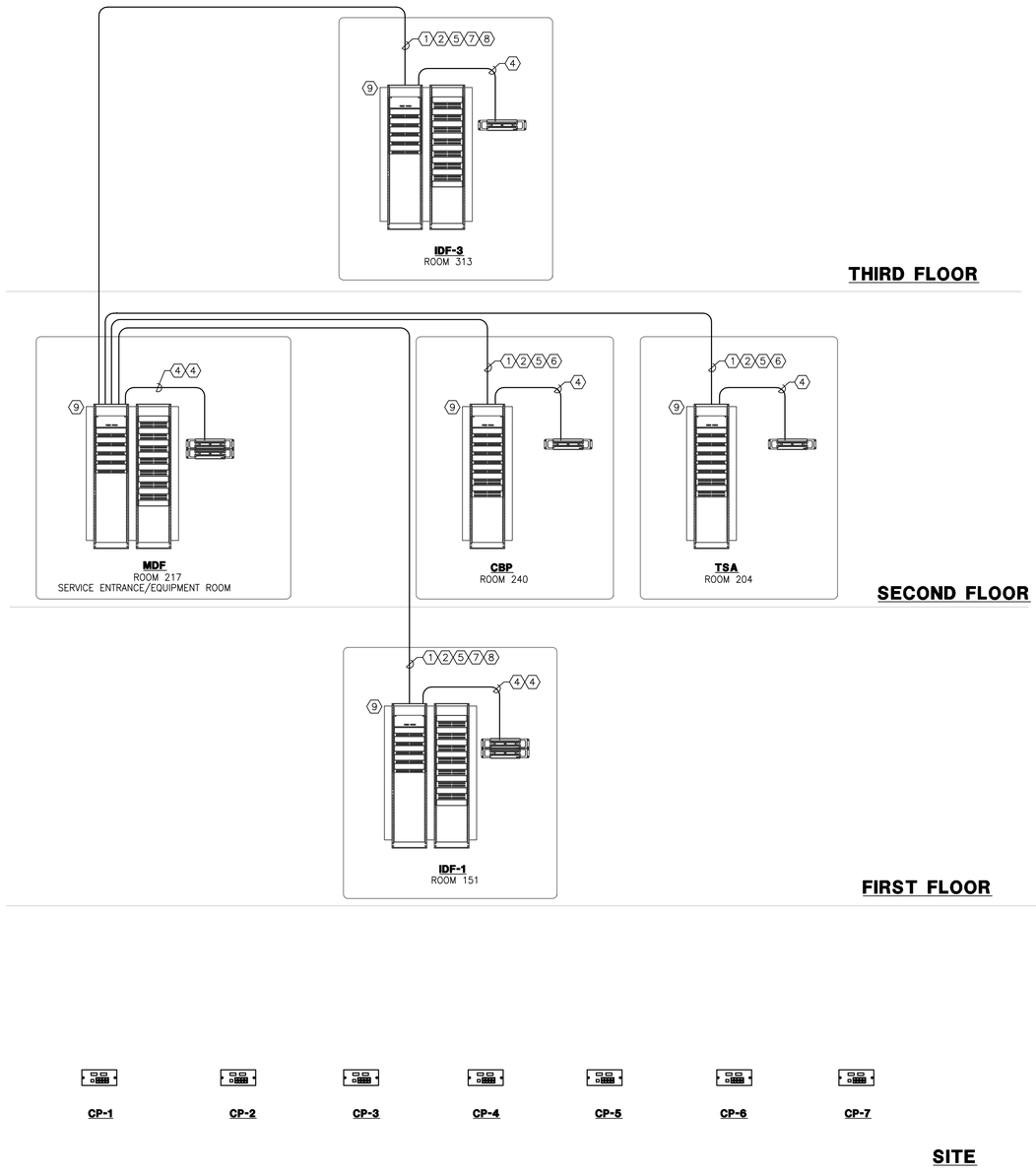

GENERAL NOTES

1. REFER TO SPECIFICATIONS SECTION 16710, 16714, 16716 & 16717 FOR PREMISE WIRING SYSTEM SCOPE OF WORK.
2. THESE DRAWINGS INDICATE TYPICAL CONNECTIONS ONLY. CONTRACTOR SHALL PROVIDE DETAILED SHOP DRAWINGS FOR ALL FIBER AND COPPER CABLES AND PATCH PANEL CONNECTIONS. THE SHOP DRAWINGS SHALL CLEARLY SHOW LOCATION OF ALL PATCH PANELS, SIZE, QUANTITY, AND PORT USAGE. PROVIDE ADDITIONAL RACKS AND OTHER ACCESSORIES REQUIRED TO PROVIDE A COMPLETE AND OPERATIONAL SYSTEM.
3. CONTRACTOR SHALL LABEL ALL PATCH PANELS, CABLES AND TERMINATION LOCATIONS. LABELS SHALL BE TYPEWRITTEN. REFER TO SPECIFICATIONS FOR LABELING REQUIREMENTS.
4. ALL CABLES SHALL BE PLENUM RATED.
5. FIBER SHALL BE FUSION SPLICED TO FACTORY ASSEMBLED PIGTAILS IN FIBER OPTIC PATCH PANEL. PIGTAIL COLOR SHALL MATCH FIBER STRAND COLOR.
6. SC CONNECTORS SHALL BE DIFFERENT COLORS TO DIFFERENTIATE BETWEEN SINGLE MODE AND MULTIMODE. CONTRACTOR SHALL USE YELLOW FOR SINGLEMODE AND ORANGE FOR MULTIMODE.

NOTES

1. SINGLE-MODE, 24 STRAND, 8-10/125um, OFNP, INDOOR/OUTDOOR FIBER OPTIC CABLE. INSTALL IN YELLOW (PLENUM) INNERDUCT IN CABLE TRAY.
2. MULTI-MODE, 36 STRAND, 50/125um, OM3, OFNP, INDOOR FIBER OPTIC CABLE. INSTALL IN ORANGE (PLENUM) INNERDUCT IN CABLE TRAY.
3. MULTI-MODE, 6 STRAND, 50/125um, OM3, OFNP, INDOOR FIBER OPTIC CABLE. INSTALL IN ORANGE (PLENUM) INNERDUCT IN CABLE TRAY.
4. 50 PAIR CAT5E CABLE. TERMINATE ON 48 PORT PATCH PANEL AT RACK AND ON 110 PUNCH DOWN BLOCK ON WALL.
5. 100 PAIR CAT5E CABLE. TERMINATE ON 48 PORT PATCH PANEL EACH END. TERMINATE (2) PAIRS PER PORT. TERMINATE (4) PAIR ON PORT 48.
6. (12) CAT6 CABLES. TERMINATE ON 24 PORT PATCH PANEL EACH END.
7. (24) CAT6 CABLES. TERMINATE ON 24 PORT PATCH PANEL EACH END.
8. 1/2" PLENUM TRUNK, 75 OHM COAXIAL CABLE (COMMSCOPE 2312K OR EQUAL.) TERMINATE IN 20" X 24" X 6" HINGED COVER WALL BOX. PROVIDE TYPE F TERMINATION.
9. SEE COMMUNICATIONS RACK/CABINET ELEVATIONS ON SHEET ET501.
10. 100 PAIR SERVICE ENTRANCE SURGE PROTECTION TERMINAL. TERMINAL SHALL BE 110 BLOCK WITH 240V SOLID STATE SURGE PROTECTION W/ COVER. TERMINAL SHALL BE PORTA SYSTEMS 25 SERIES OR EQUAL.
11. HYBRID SINGLE-MODE, 24 STRAND, 8-10/125um, MULTI-MODE, 24 STRAND, 62.5/125um, OUTDOOR FIBER OPTIC CABLE. INSTALL IN HDPE INNERDUCT OR 3M MAXCEL IN DUCTBANK/CONDUIT SYSTEM. SEE SITE PLAN FOR PATH.

1 / ET606 **COMMUNICATION RISER**
SCALE: NTS

WARNING: THIS RECORD CONTAINS SENSITIVE SECURITY INFORMATION THAT IS CONTROLLED UNDER 49 CFR PARTS 15 AND 1520. NO PART OF THIS RECORD MAY BE DISCLOSED TO PERSONS WITHOUT A "NEED TO KNOW", AS DEFINED IN 49 CFR PARTS 15 AND 1520, EXCEPT WITH THE WRITTEN PERMISSION OF THE ADMINISTRATOR OF THE TRANSPORTATION SECURITY ADMINISTRATION OR THE SECRETARY OF TRANSPORTATION. UNAUTHORIZED RELEASE MAY RESULT IN CIVIL PENALTY OR OTHER ACTION. FOR U.S. GOVERNMENT AGENCIES, PUBLIC DISCLOSURE IS GOVERNED BY 5 U.S.C. 552 AND 49 CFR PARTS 15 AND 1520.

RS&H
IMPROVING YOUR WORLD
Reynolds, Smith and Hills, Inc.
4525 Airport Approach Rd, Ste A
Duluth, Minnesota 55811
218-722-1227 Fax: 218-722-1062
www.rsandh.com

DULUTH AIRPORT AUTHORITY

DULUTH INTERNATIONAL AIRPORT DULUTH, MN

NEW PASSENGER TERMINAL

CONSULTANTS
Interior Architects:
SJA ARCHITECTS
11 E Superior Street Suite 340, Duluth MN 55802
TEL: (218) 724-8578 / FAX: (218) 724-8717
Structural Engineers:
MBJ CONSULTING ENG.
501 Lake Avenue South, Suite 300, Duluth MN 55802
TEL: (218) 722-1056 / FAX: (218) 722-9306
M/E/P/FP Engineers:
COSENTINI ASSOCIATES INC.
1 South Wacker Drive, 37th Floor, Chicago IL 60606
TEL: (312) 201-7408 / FAX: (312) 201-0031
Baggage Handling Systems Consultants:
BNP ASSOCIATES INC.
101 East Ridge Office Park, Suite 103, Danbury CT 06810
TEL: (203) 792-3000 / FAX: (203) 792-4900
Landscaping Consultants:
APPOLD DESIGN
2432 East First Street, Duluth MN 55812
TEL: (218) 591-5079

SEAL

REVISIONS

NO.	DESCRIPTION	DATE

DATE ISSUED: 04-12-10
REVIEWED BY: BA
DRAWN BY: RJL
DESIGNED BY: BA

AIP PROJECT NUMBER
213-1882-091

© 2006 REYNOLDS, SMITH AND HILLS INC.

SHEET TITLE
COMMUNICATION RISER

SHEET NUMBER
ET606

90% NOT FOR CONSTRUCTION

DRAWING SYMBOLS

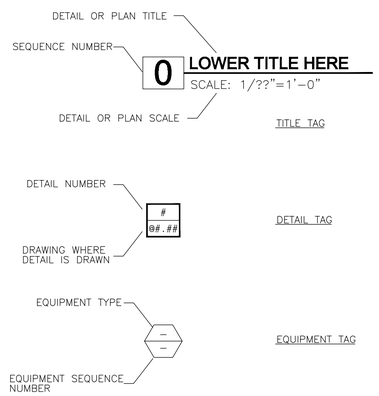

PLUMBING SYMBOLS

SYMBOLS	DESCRIPTION
DT	DRAIN TILE (UNDERGROUND)
ST	STORM (SUSPENDED)
ST	STORM (UNDERGROUND)
SAN	SANITARY (SUSPENDED)
SAN	SANITARY (UNDERGROUND)
W	WASTE (SUSPENDED)
V	VENT PIPING (SUSPENDED)
V	VENT PIPING (UNDERGROUND)
	COLD WATER
	HOT WATER
	HOT WATER RETURN
CC	ROLL DOWN PIPING ON 45°
	DIRECTION OF FLOW
	PIPE LOOKING DOWN
	PIPE LOOKING UP
	P-TRAP WITH VENT PIPE CONNECTION
	TEE CONNECTION WITH BRANCH LOOKING UP
	TEE CONNECTION WITH BRANCH LOOKING DOWN
	SHUT-OFF VALVE
	CHECK VALVE
	BALANCING VALVE
FCO	FLOOR CLEANOUTS
	FLOOR DRAIN & TYPE NO. (FD-X)
WC-X	WATER CLOSET & TYPE NO. (WC-X)
UR-X	URINAL & TYPE NO. (UR-X)
JMB-X	JANITOR'S MOP BASIN & TYPE NO. (JMB-X)
L-X	LAVATORY & TYPE NO. (L-X)
HB-X	HOSE BIBB & TYPE NO. (HB-X)
HWH	HOT WATER HEATER
EWC	ELECTRIC WATER COOLER

PLUMBING ABBREVIATIONS

ABBREVIATIONS	DESCRIPTION
AD	AREA DRAIN
AFF	ABOVE FINISHED FLOOR
ARF	ABOVE RAISED FLOOR
ASC	ABOVE SUSPENDED CEILING
AP	ACCESS PANEL
CI	CAST IRON
CO	CLEANOUTS
CONN	CONNECT
CV	CHECK VALVE
CW	COLD WATER
DET	DETAIL
DCV	DOUBLE CHECK VALVE
DN	DOWN
DT	DRAIN TILE
DS	DOWNSPOUT
DWG	DRAWING
E	EXISTING
ES	EMERGENCY SHOWER
EW	EYE WASH
EWC	ELECTRIC WATER COOLER
FCO	FLOOR CLEANOUTS
FD	FLOOR DRAIN
G	GAS
GD	GARAGE DRAIN
GN	GENERAL NOTE
GV	GATE VALVE
HB	HOSE BIBB
HW	HOT WATER
HWH	HOT WATER HEATER
HWR	HOT WATER RETURN
IE	INVERT ELEVATION
LAV	LAVATORY
LCKR	LOCKER ROOM
MR	MOP RECEPTOR
MAV	MANUAL AIR VENT
N	NEW
OFD	OVERFLOW DRAIN
OHD	OPEN HUB DRAIN
PD	PIT DRAIN
PG	PRESSURE GAUGE
RD	ROOF DRAIN
ROB	ROD OUT BASIN
RPZBFP	REDUCE PRESSURE ZONE BACK FLOW PREVENTOR
SAN	SANITARY
SEV	SEWAGE EJECTOR VENT
SN	SHEET NOTE
SSD	SUB-SOIL DRAINAGE
ST	STORM
STK	STACK
T & P	TEMP. & PRESSURE RELIEF VALVE
TD	TRENCH DRAIN
TP	TRAP PRIMER
TYP	TYPICAL
UG	UNDERGROUND
UR	URINAL
VB	VACUUM BREAKER
VIF	VERIFY IN FIELD
VTR	VENT THRU ROOF
WC	WATER CLOSET
WCO	WALL CLEANOUTS
WD	WASTE DISPOSER

DULUTH INTERNATIONAL AIRPORT

5528 PLUMBING DRAWING LIST

Sheet No.	Filename (proj.#5528)	DRAWING TITLE	DATE: 11/05/09 ISSUED FOR CD	01/08/10 60% REVIEW	03/26/10 90% REVIEW	04/06/10 90% CD					
P0-01	5528P001	PLUMBING SYMBOLS, ABBREVIATIONS AND DRAWING INDEX	●	●	●	●					
P1-100	5528P100	ENLARGED UNDERGROUND PLUMBING PLAN AREA A	●	●	●	●					
P1-101	5528P101	ENLARGED UNDERGROUND PLUMBING PLAN AREA B	●	●	●	●					
P1-102	5528P102	ENLARGED UNDERGROUND PLUMBING PLAN AREA A	●	●	●	●					
P1-103	5528P103	ENLARGED UNDERGROUND PLUMBING PLAN AREA B	●	●	●	●					
P1-10	5528P110	ENLARGED FIRST FLOOR PLUMBING PLAN AREA A	●	●	●	●					
P1-11	5528P111	ENLARGED FIRST FLOOR PLUMBING PLAN AREA B	●	●	●	●					
P1-12	5528P112	ENLARGED SECOND FLOOR PLUMBING PLAN AREA A	●	●	●	●					
P1-13	5528P113	ENLARGED SECOND FLOOR PLUMBING PLAN AREA B	●	●	●	●					
P1-14	5528P114	ENLARGED THIRD FLOOR PLUMBING PLAN AREA A	●	●	●	●					
P1-15	5528P115	ENLARGED THIRD FLOOR PLUMBING PLAN AREA B	●	●	●	●					
P1-16	5528P116	ENLARGED ROOF LEVEL PLUMBING PLAN AREA A	●	●	●	●					
P1-17	5528P117	ENLARGED ROOF LEVEL PLUMBING PLAN AREA B	●	●	●	●					
P1-18	5528P118	ENLARGED FIRST FLOOR PLUMBING PLAN AREA A CANOPY	●	●	●	●					
P1-19	5528P119	ENLARGED FIRST FLOOR PLUMBING PLAN AREA B CANOPY	●	●	●	●					
P1-20	5528P120	ENLARGED SECOND FLOOR PLUMBING PLAN AREA A CANOPY ROOF	●	●	●	●					
P1-21	5528P121	ENLARGED SECOND FLOOR PLUMBING PLAN AREA B CANOPY ROOF	●	●	●	●					
P1-22	5528P122	TUG RAMP ROOF PLUMBING PLAN			●	●					
P3-01	5528P301	WATER SCHEMATIC, GAS SCHEMATIC AND STORM RISER DIAGRAM	●	●	●	●					
P3-02	5528P302	COLD & HOT WATER RISER DIAGRAM	●	●	●	●					
P3-03	5528P303	WASTE AND VENT RISER DIAGRAM			●	●					
P4-01	5528P401	PLUMBING DETAILS	●	●	●	●					
P4-02	5528P402	PLUMBING DETAILS	●	●	●	●					
P4-03	5528P403	PLUMBING DETAILS			●	●					
P5-01	5528P501	PLUMBING SCHEDULES	●	●	●	●					

RS&H.
IMPROVING YOUR WORLD

Reynolds, Smith and Hills, Inc.
4525 Airport Approach Rd, Ste A
Duluth, Minnesota 55811
218-722-1227 Fax: 218-722-1052
www.rsandh.com

DULUTH AIRPORT AUTHORITY

DULUTH INTERNATIONAL AIRPORT
DULUTH, MN

NEW TERMINAL DESIGN

CONSULTANTS

Interior Architects:
SJA ARCHITECTS
11 E Superior Street Suite 245, Duluth MN 55802
TEL: (218) 724-5576 / FAX: (218) 724-5717

Structural Engineers:
MBJ CONSULTING ENG.
501 Lake Avenue South, Suite 200, Duluth MN 55802
TEL: (218) 723-1020 / FAX: (218) 723-0589

MEP/FP Engineers:
COSENTINI ASSOCIATES INC.
1 South Wacker Drive, 37th Floor, Chicago IL 60603
TEL: (312) 201-7400 / FAX: (312) 201-0201

Baggage Handling Systems Consultants:
BNP ASSOCIATES INC.
101 East Ridge Office Park, Suite 103, Danbury CT 06810
TEL: (203) 792-2000 / FAX: (203) 792-4020

Landscaping Consultants:
APPOLD DESIGN
3432 East First Street, Duluth MN 55812
TEL: (218) 501-0070

SEAL

REVISIONS

NO.	DESCRIPTION	DATE

DATE ISSUED: 04-12-10
REVIEWED BY: XXX
DRAWN BY: HV
DESIGNED BY: SA

AEP PROJECT NUMBER
213-1882-091

© 2006 REYNOLDS, SMITH AND HILLS INC.

SHEET TITLE
PLUMBING SYMBOL LIST, ABBREVIATIONS AND DRAWING LIST

SHEET NUMBER
P0-01

90% NOT FOR CONSTRUCTION

Drawing: I:\5528.00 Duluth Airport\LD CADD\DLD Plumbing\Dwgs\5528_P001.dwg Plotted on: 4/6/2010 1:23 PM Plotted by: Valens, Henry

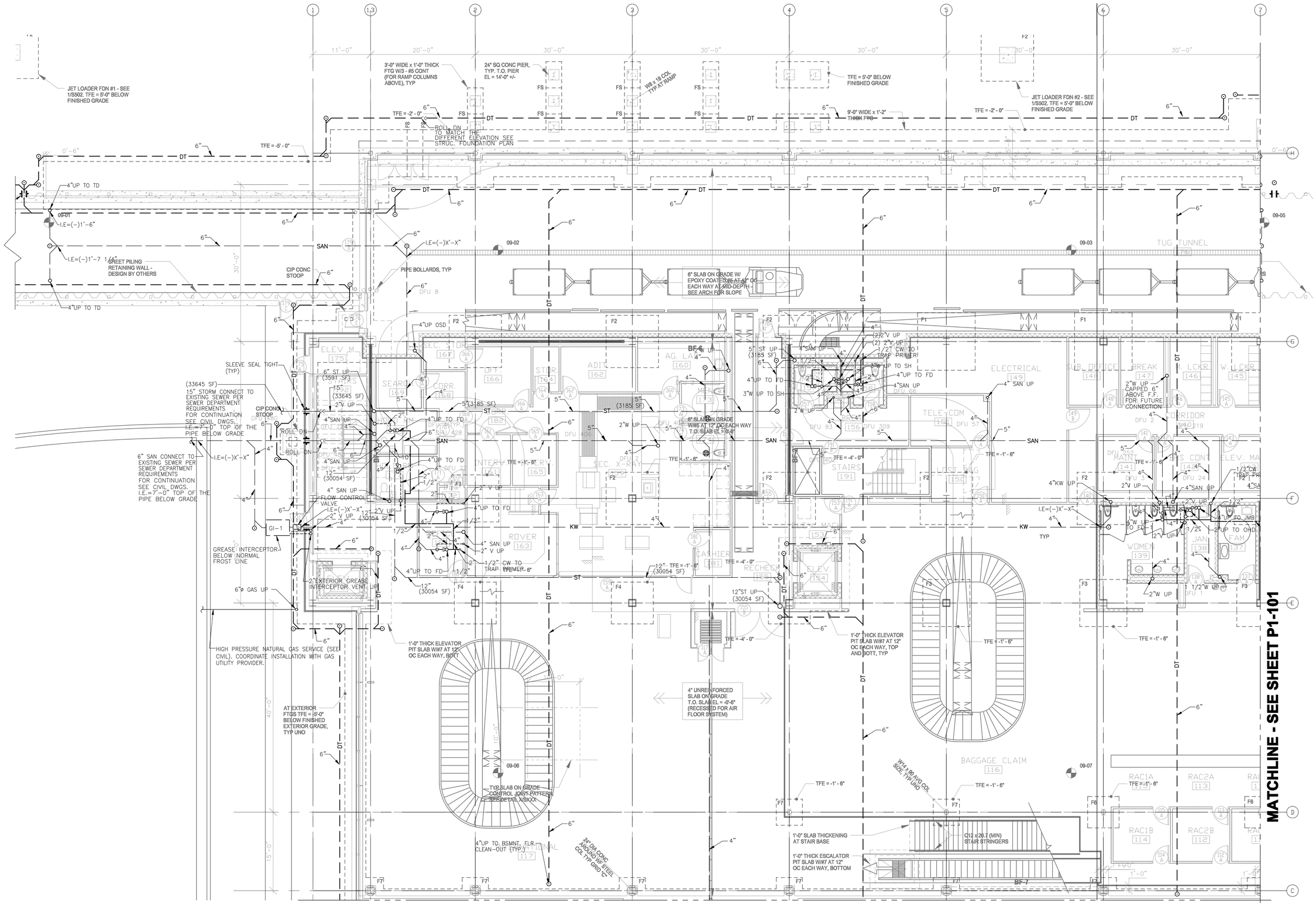

1 ENLARGED FIRST LEVEL FLOOR PLAN - AREA A
1/8" = 1'-0"

SCALE: 1/8" = 1'-0"

Drawing: I:\2028.00 Duluth Airport\LD CADD\[D.I] Plumbing\Dwgs\2028_P100.dwg Plotted on: 4/9/2010 3:37 PM Plotted by: Velona, Henry

RS&H.
IMPROVING YOUR WORLD

Reynolds, Smith and Hills, Inc.
4525 Airport Approach Rd, Ste A
Duluth, Minnesota 55811
218-722-1227 Fax: 218-722-1052
www.rsandh.com

DULUTH AIRPORT AUTHORITY

DULUTH INTERNATIONAL AIRPORT DULUTH, MN

NEW TERMINAL DESIGN

CONSULTANTS

Interior Architects:
SJA ARCHITECTS
11 E Superior Street Suite 245, Duluth MN 55802
TEL: (218) 724-5576 / FAX: (218) 724-5717

Structural Engineers:
MBJ CONSULTING ENG.
501 Lake Avenue South, Suite 300, Duluth MN 55802
TEL: (218) 723-1020 / FAX: (218) 723-0589

MEP/FP Engineers:
COSENTINI ASSOCIATES INC.
1 South Wacker Drive, 37th Floor, Chicago IL 60606
TEL: (312) 201-7400 / FAX: (312) 201-0201

Baggage Handling Systems Consultants:
BNP ASSOCIATES INC.
101 East Ridge Office Park, Suite 100, Danbury CT 06810
TEL: (203) 792-2000 / FAX: (203) 792-4020

Landscaping Consultants:
APPOLD DESIGN
2432 East First Street, Duluth MN 55812
TEL: (218) 201-0070

SEAL

REVISIONS

NO.	DESCRIPTION	DATE

DATE ISSUED: 04-12-10
REVIEWED BY: XXX
DRAWN BY: SA
DESIGNED BY: SA

AEP PROJECT NUMBER
213-1882-091

© 2006 REYNOLDS, SMITH AND HILLS INC.

SHEET TITLE
ENLARGED UNDERGROUND PLUMBING PLAN AREA A

SHEET NUMBER
P1-100

90% NOT FOR CONSTRUCTION

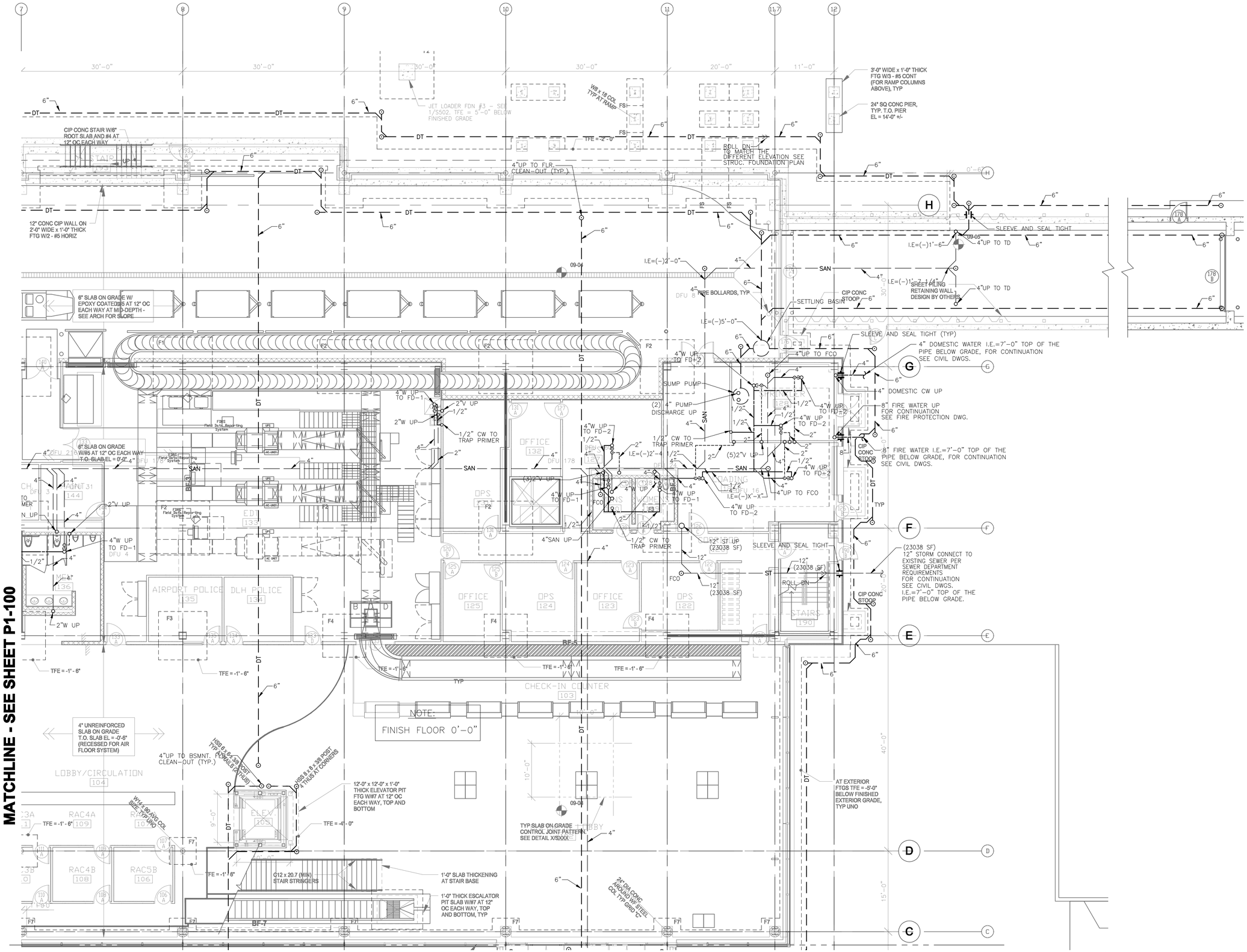

1 ENLARGED UNDERGROUND PLAN - AREA B
1/8" = 1'-0"

RS&H. IMPROVING YOUR WORLD

Reynolds, Smith and Hills, Inc.
4525 Airport Approach Rd, Ste A
Duluth, Minnesota 55811
218-722-1227 Fax: 218-722-1052
www.rsandh.com

DULUTH AIRPORT AUTHORITY

DULUTH INTERNATIONAL AIRPORT DULUTH, MN

NEW TERMINAL DESIGN

CONSULTANTS

Interior Architects:
SJA ARCHITECTS
11 E Superior Street Suite 245, Duluth MN 55802
TEL: (218) 724-8876 / FAX: (218) 724-8717

Structural Engineers:
MBJ CONSULTING ENG.
824 Lake Avenue South, Suite 200, Duluth MN 55802
TEL: (218) 723-1020 / FAX: (218) 723-0369

MEP/FP Engineers:
COSENTINI ASSOCIATES INC.
1 South Wacker Drive, 37th Floor, Chicago IL 60603
TEL: (312) 201-7400 / FAX: (312) 201-0201

Baggage Handling Systems Consultants:
BHP ASSOCIATES INC.
101 East Ridge Office Park, Suite 100, Danbury CT 06810
TEL: (203) 792-2000 / FAX: (203) 792-4020

Landscaping Consultants:
APPOLD DESIGN
2432 East First Street, Duluth MN 55812
TEL: (218) 591-0070

SEAL

REVISIONS

NO.	DESCRIPTION	DATE

DATE ISSUED: 04-12-10
REVIEWED BY: XXX
DRAWN BY: SA
DESIGNED BY: SA

AEP PROJECT NUMBER
213-1882-091

© 2006 REYNOLDS, SMITH AND HILLS INC.

SHEET TITLE
ENLARGED UNDERGROUND PLUMBING PLAN AREA B

SHEET NUMBER
P1-101

90% NOT FOR CONSTRUCTION

Drawing: I:\2882.00 Duluth Airport\AS CADD\(SJA) Plumbing\Dwgs\2882_P101.dwg Plotted on: 4/9/2010 3:39 PM Plotted by: Valens, Henry

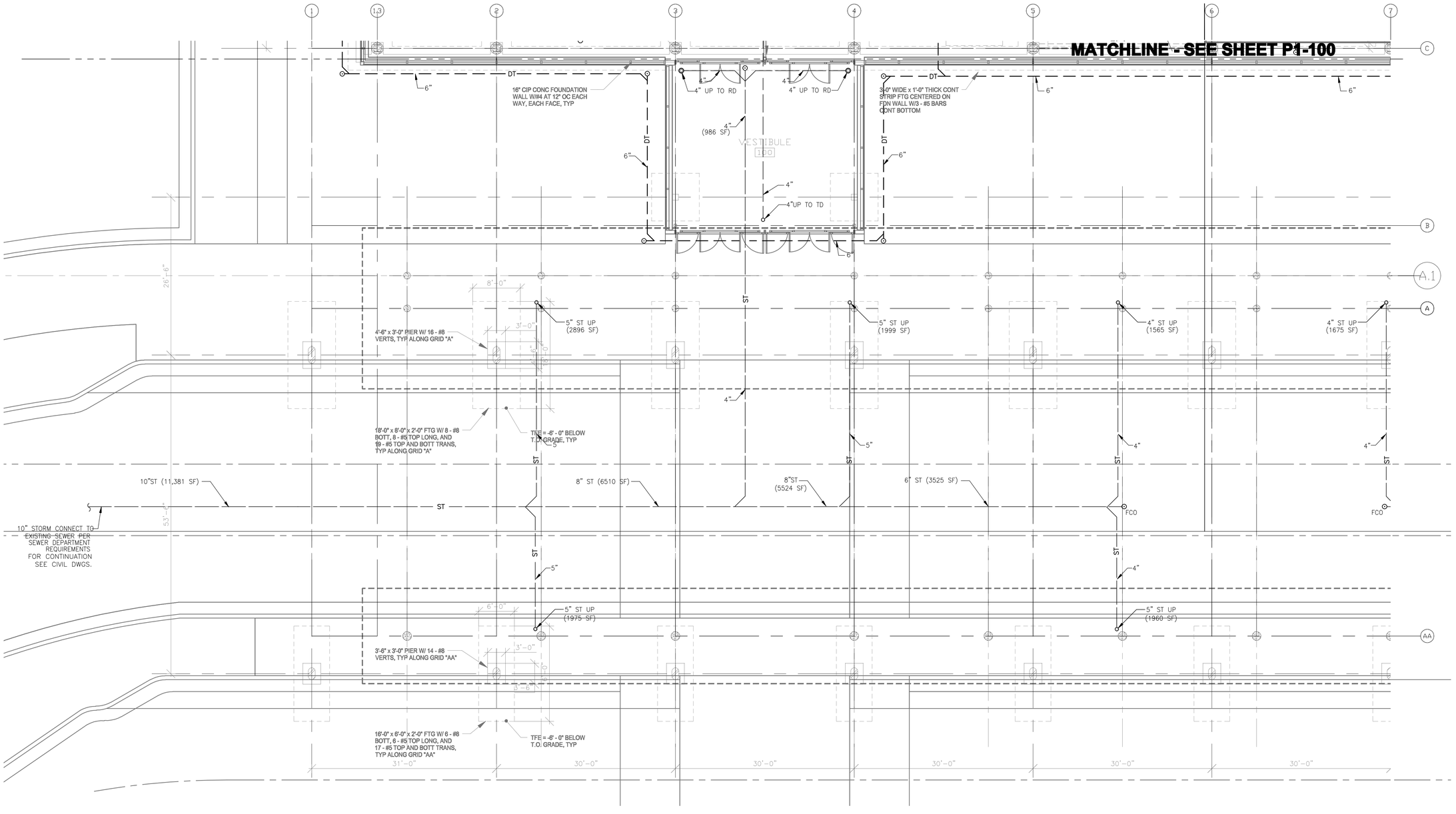

N

1 ENLARGED UNDERGROUND PLAN - AREA A
1/8" = 1'-0"

8' 4' 0 8' 16'
SCALE: 1/8" = 1'-0"

RS&H
IMPROVING YOUR WORLD

Reynolds, Smith and Hills, Inc.
4525 Airport Approach Rd, Ste A
Duluth, Minnesota 55811
218-722-1227 Fax: 218-722-1052
www.reandh.com

DULUTH AIRPORT AUTHORITY

DULUTH INTERNATIONAL AIRPORT
DULUTH, MN

NEW TERMINAL DESIGN

CONSULTANTS

Interior Architects:
SJA ARCHITECTS
11 E Superior Street Suite 340, Duluth MN 55802
TEL: (218) 724-5576 / FAX: (218) 724-5717

Structural Engineers:
MBJ CONSULTING ENG.
501 Lake Avenue South, Suite 300, Duluth MN 55802
TEL: (218) 723-1555 / FAX: (218) 723-5555

MEP/FP Engineers:
COSENTINI ASSOCIATES INC.
1 South Wacker Drive, 37th Floor, Chicago IL 60606
TEL: (312) 201-7400 / FAX: (312) 201-6001

Baggage Handling Systems Consultants:
BNP ASSOCIATES INC.
101 East Ridge Office Park, Suite 100, Danbury CT 06810
TEL: (203) 792-5500 / FAX: (203) 792-4500

Landscaping Consultants:
APPOLD DESIGN
2432 East First Street, Duluth MN 55812
TEL: (218) 591-5579

SEAL

REVISIONS

NO.	DESCRIPTION	DATE

DATE ISSUED: 04-12-10
REVIEWED BY: XXX
DRAWN BY: SA
DESIGNED BY: SA

AEP PROJECT NUMBER
213-1882-091

© 2006 REYNOLDS, SMITH AND HILLS INC.

SHEET TITLE
ENLARGED UNDERGROUND PLUMBING PLAN AREA A

SHEET NUMBER
P1-102

90% NOT FOR CONSTRUCTION

Drawing: I:\5555.00 Duluth Airport\5.0 CADD\(5.0) Plumbing\Dwgs\5555_P102.dwg Plotted on: 4/9/2010 3:39 PM Plotted by: Velona, Henry

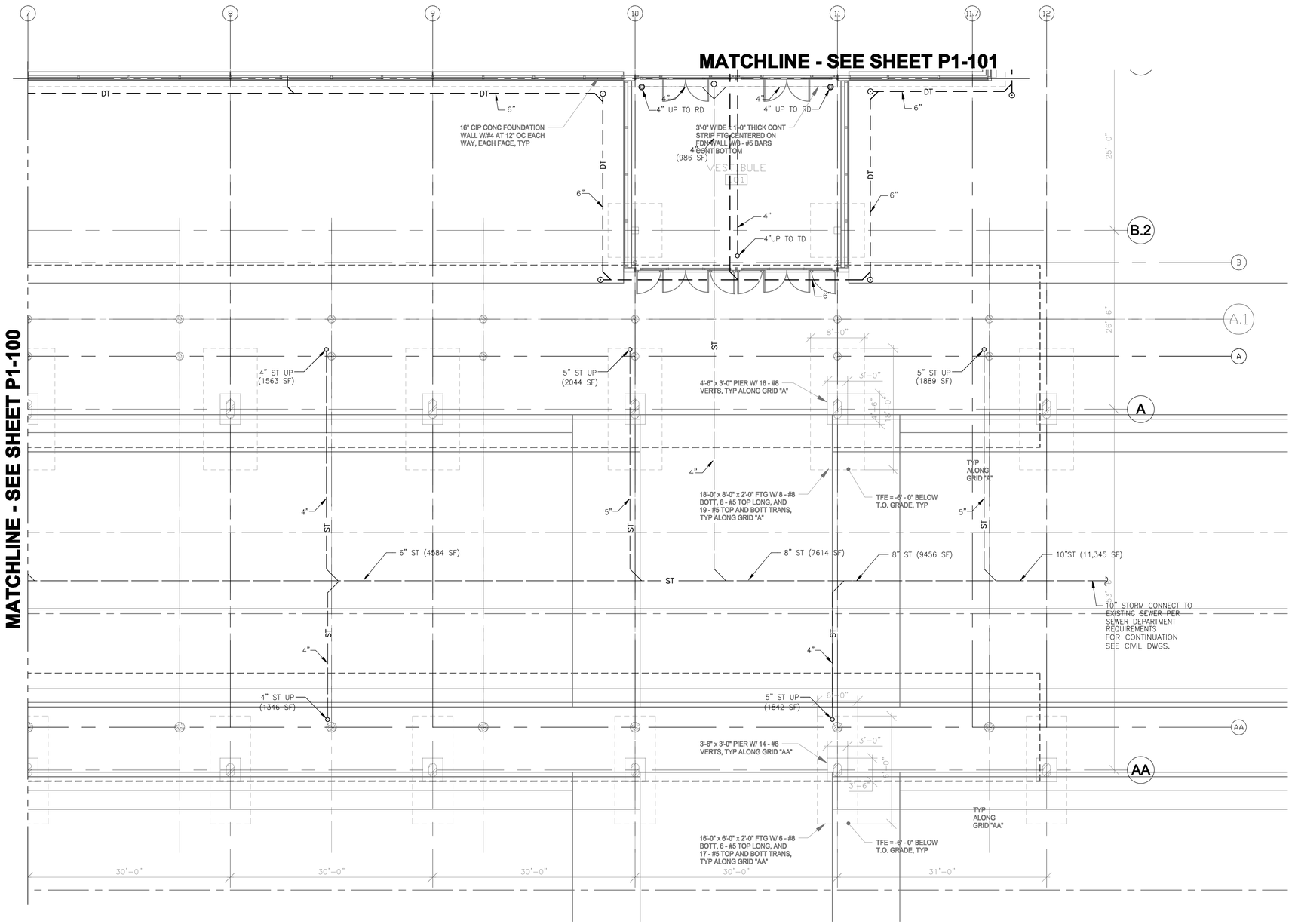

N

1 ENLARGED FIRST LEVEL FLOOR PLAN - AREA B

1/8" = 1'-0"

8' 4' 0 8' 16'

SCALE: 1/8" = 1'-0"

Drawing: H:\2028.00 Duluth Airport\LD CADD\[D.0] Plumbing\Dwgs\2028_P103.dwg Plotted on: 4/9/2010 3:40 PM Plotted by: Velona, Henry

RS&H. IMPROVING YOUR WORLD

Reynolds, Smith and Hills, Inc.
4525 Airport Approach Rd, Ste A
Duluth, Minnesota 55811
218-722-1227 Fax: 218-722-1052
www.rsandh.com

DULUTH AIRPORT AUTHORITY

DULUTH INTERNATIONAL AIRPORT DULUTH, MN

NEW TERMINAL DESIGN

CONSULTANTS

Interior Architects:
SJA ARCHITECTS
11 E Superior Street Suite 345, Duluth MN 55802
TEL: (218) 724-5976 / FAX: (218) 724-5717

Structural Engineers:
MBJ CONSULTING ENG.
501 Lake Avenue South, Suite 300, Duluth MN 55802
TEL: (218) 723-1020 / FAX: (218) 723-0369

MEP/FP Engineers:
COSENTINI ASSOCIATES INC.
1 South Wacker Drive, 37th Floor, Chicago IL 60606
TEL: (312) 201-7400 / FAX: (312) 201-0001

Baggage Handling Systems Consultants:
BHP ASSOCIATES INC.
101 East Ridge Office Park, Suite 100, Danbury CT 06810
TEL: (203) 792-2000 / FAX: (203) 792-4020

Landscaping Consultants:
APPOLD DESIGN
3432 East First Street, Duluth MN 55812
TEL: (218) 201-0070

SEAL

REVISIONS

NO.	DESCRIPTION	DATE

DATE ISSUED: 04-12-10
REVIEWED BY: XXX
DRAWN BY: SA
DESIGNED BY: SA

AEP PROJECT NUMBER
213-1882-091

© 2006 REYNOLDS, SMITH AND HILLS INC.

SHEET TITLE

ENLARGED UNDERGROUND PLUMBING PLAN AREA B

SHEET NUMBER

P1-103

90% NOT FOR CONSTRUCTION

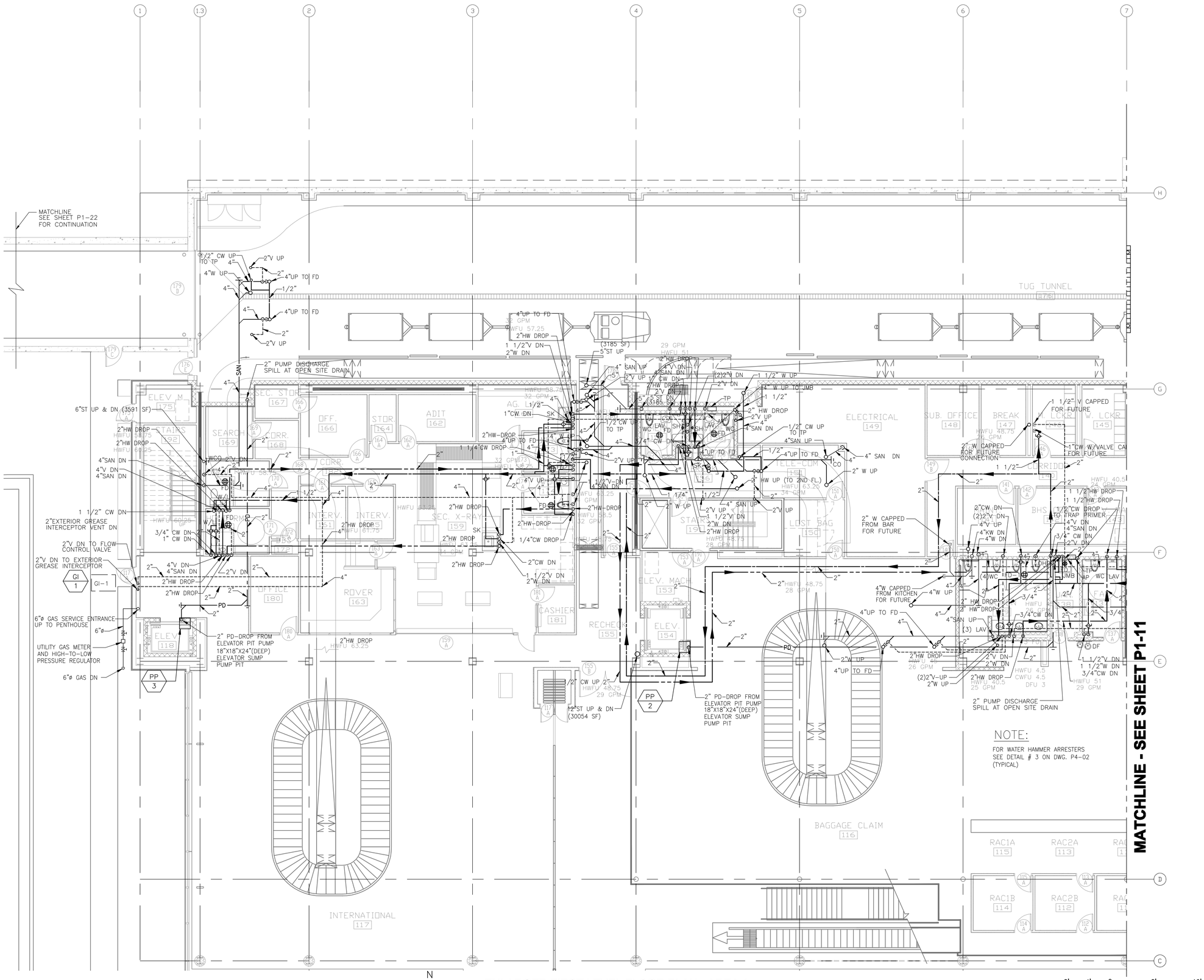

1 ENLARGED FIRST LEVEL FLOOR PLAN - AREA A
1/8" = 1'-0"

RS&H
IMPROVING YOUR WORLD

Reynolds, Smith and Hills, Inc.
4525 Airport Approach Rd, Ste A
Duluth, Minnesota 55811
218-722-1227 Fax: 218-722-1052
www.reandh.com

DULUTH AIRPORT AUTHORITY

DULUTH INTERNATIONAL AIRPORT
DULUTH, MN

NEW TERMINAL DESIGN

CONSULTANTS

Interior Architects:
SJA ARCHITECTS
11 E Superior Street Suite 340, Duluth MN 55802
TEL: (218) 724-5576 / FAX: (218) 724-5717

Structural Engineers:
MBJ CONSULTING ENG.
501 Lake Avenue South, Suite 300, Duluth MN 55802
TEL: (218) 723-1555 / FAX: (218) 723-5930

MEP/FP Engineers:
COSENTINI ASSOCIATES INC.
1 South Wacker Drive, 37th Floor, Chicago IL 60606
TEL: (312) 201-7400 / FAX: (312) 201-6001

Baggage Handling Systems Consultants:
BNP ASSOCIATES INC.
101 East Ridge Office Park, Suite 100, Danbury CT 06810
TEL: (203) 793-5500 / FAX: (203) 793-4920

Landscaping Consultants:
APPOLD DESIGN
2432 East First Street, Duluth MN 55812
TEL: (218) 591-5979

SEAL

REVISIONS

NO.	DESCRIPTION	DATE

DATE ISSUED: 04-12-10
REVIEWED BY: XXX
DRAWN BY: SA
DESIGNED BY: SA

AEP PROJECT NUMBER
213-1882-091

© 2006 REYNOLDS, SMITH AND HILLS INC.

SHEET TITLE
ENLARGED FIRST FLOOR PLUMBING PLAN AREA A

SHEET NUMBER
P1-10

90% NOT FOR CONSTRUCTION

Drawing: I:\5555.00 Duluth Airport\5.0 CADD\(5.0) Plumbing\Dwgs\5555_P110.dwg Plotted on: 4/9/2010 3:41 PM Plotted by: Volene, Henry

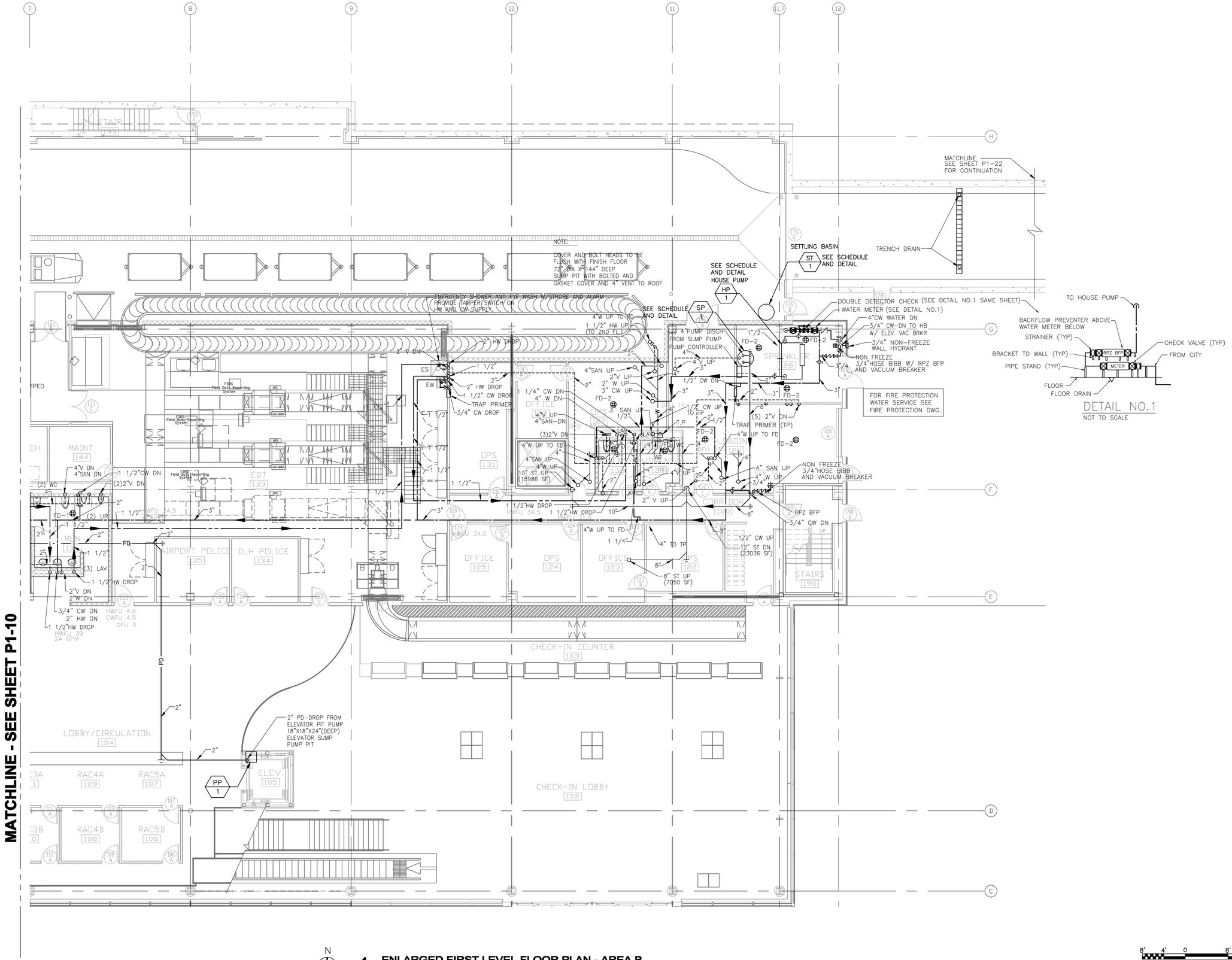

1 ENLARGED FIRST LEVEL FLOOR PLAN - AREA B
1/8" = 1'-0"

RS&H
IMPROVING YOUR WORLD

Reynolds, Smith and Hills, Inc.
4525 Airport Approach Rd, Ste A
Duluth, Minnesota 55811
218-722-1227 Fax: 218-722-1052
www.reandh.com

DULUTH AIRPORT AUTHORITY

DULUTH INTERNATIONAL AIRPORT
DULUTH, MN

NEW TERMINAL DESIGN

CONSULTANTS

Interior Architects:
SJA ARCHITECTS
11 E Superior Street Suite 340, Duluth MN 55802
TEL: (218) 724-5076 / FAX: (218) 724-5717

Structural Engineers:
MBJ CONSULTING ENG.
501 Lake Avenue South, Suite 300, Duluth MN 55802
TEL: (218) 723-1030 / FAX: (218) 723-0030

MEP/FP Engineers:
COSENTINI ASSOCIATES INC.
1 South Wacker Drive, 37th Floor, Chicago IL 60606
TEL: (312) 391-7400 / FAX: (312) 391-0091

Baggage Handling Systems Consultants:
BNP ASSOCIATES INC.
101 East Ridge Office Park, Suite 100, Danbury CT 06810
TEL: (203) 793-3000 / FAX: (203) 793-4000

Landscaping Consultants:
APPOLD DESIGN
2432 East First Street, Duluth MN 55812
TEL: (218) 591-5079

SEAL

REVISIONS

NO.	DESCRIPTION	DATE

DATE ISSUED: 04-12-10
REVIEWED BY: XXX
DRAWN BY: SA
DESIGNED BY: SA

AEP PROJECT NUMBER
213-1882-091

© 2006 REYNOLDS, SMITH AND HILLS INC.

SHEET TITLE
ENLARGED FIRST FLOOR PLUMBING PLAN AREA B

SHEET NUMBER
P1-11

90% NOT FOR CONSTRUCTION

Drawing: k:\5528.00 Duluth Airport\5.0 CADD\(5.0) Plumbing\Dwgs\5528_P111.dwg Plotted on: 4/9/2010 3:43 PM Plotted by: Ahmed, Salman

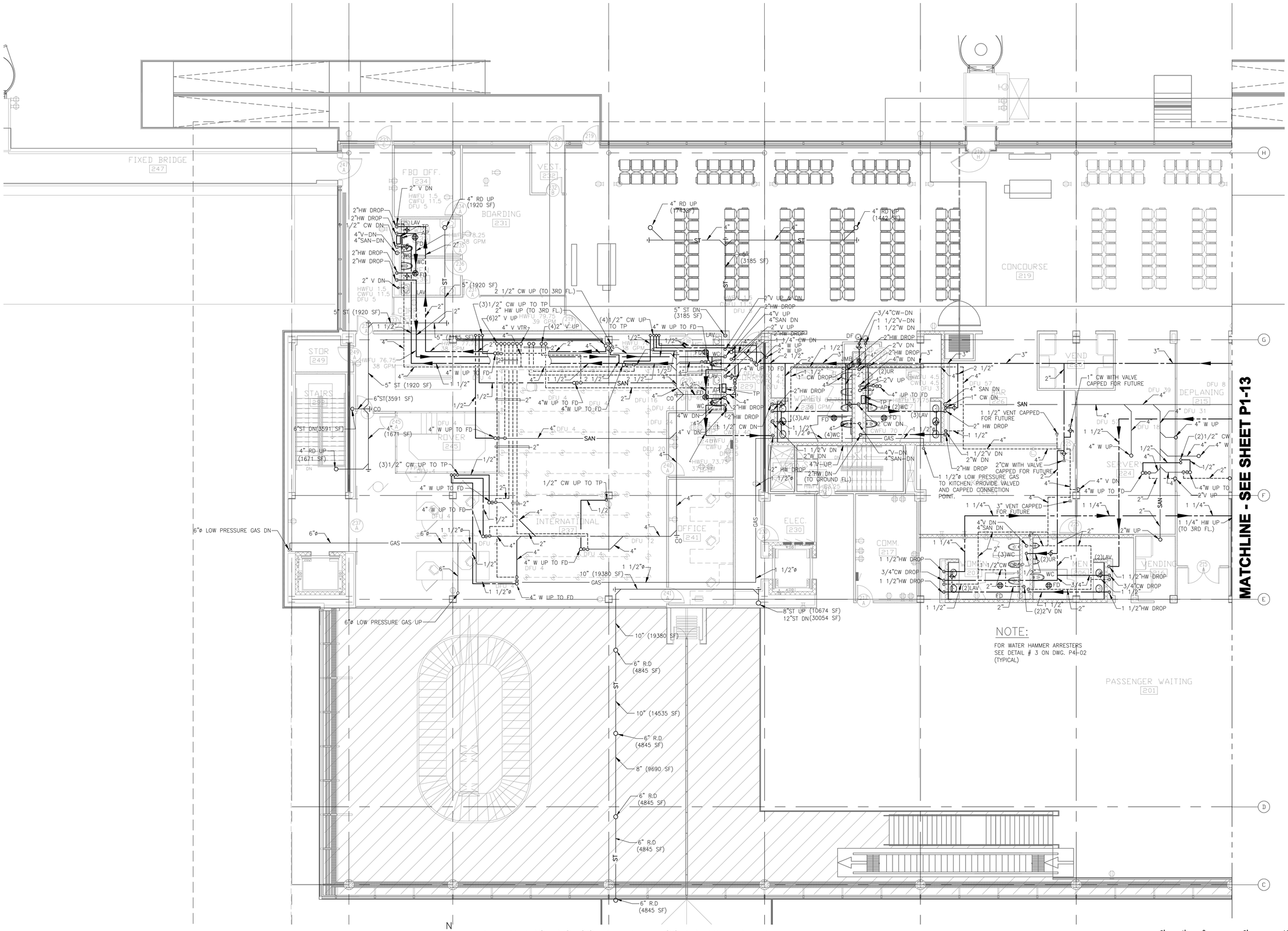

1 ENLARGED SECOND LEVEL FLOOR PLAN - AREA A
1/8" = 1'-0"

SCALE: 1/8" = 1'-0"

RS&H
IMPROVING YOUR WORLD

Reynolds, Smith and Hills, Inc.
4525 Airport Approach Rd, Ste A
Duluth, Minnesota 55811
218-722-1227 Fax: 218-722-1052
www.rsandh.com

DULUTH AIRPORT AUTHORITY

DULUTH INTERNATIONAL AIRPORT
DULUTH, MN

NEW TERMINAL DESIGN

CONSULTANTS

Interior Architects:
SJA ARCHITECTS
11 E Superior Street Suite 340, Duluth MN 55802
TEL: (218) 724-5576 / FAX: (218) 724-5717

Structural Engineers:
MBJ CONSULTING ENG.
501 Lake Avenue South, Suite 300, Duluth MN 55802
TEL: (218) 723-1050 / FAX: (218) 723-0500

M/E/P/FP Engineers:
COSENTINI ASSOCIATES INC.
1 South Wacker Drive, 37th Floor, Chicago IL 60606
TEL: (312) 291-7400 / FAX: (312) 291-0001

Baggage Handling Systems Consultants:
BNP ASSOCIATES INC.
101 East Ridge Office Park, Suite 100, Danbury CT 06810
TEL: (203) 792-3000 / FAX: (203) 792-4000

Landscaping Consultants:
APPOLD DESIGN
2432 East First Street, Duluth MN 55812
TEL: (218) 591-5079

SEAL

REVISIONS

NO.	DESCRIPTION	DATE

DATE ISSUED: 04-12-10
REVIEWED BY: XXX
DRAWN BY: SA
DESIGNED BY: SA

AEP PROJECT NUMBER
213-1882-091

© 2006 REYNOLDS, SMITH AND HILLS INC.

SHEET TITLE
ENLARGED SECOND FLOOR PLUMBING PLAN AREA A

SHEET NUMBER
P1-12

90% NOT FOR CONSTRUCTION

Drawing: k:\5528.00 Duluth Airport\5.0 CADD\(5.0) Plumbing\Dwgs\5528_P112.dwg Plotted on: 4/9/2010 3:44 PM Plotted by: Ahmed, Saleem

MATCHLINE - SEE SHEET P1-12

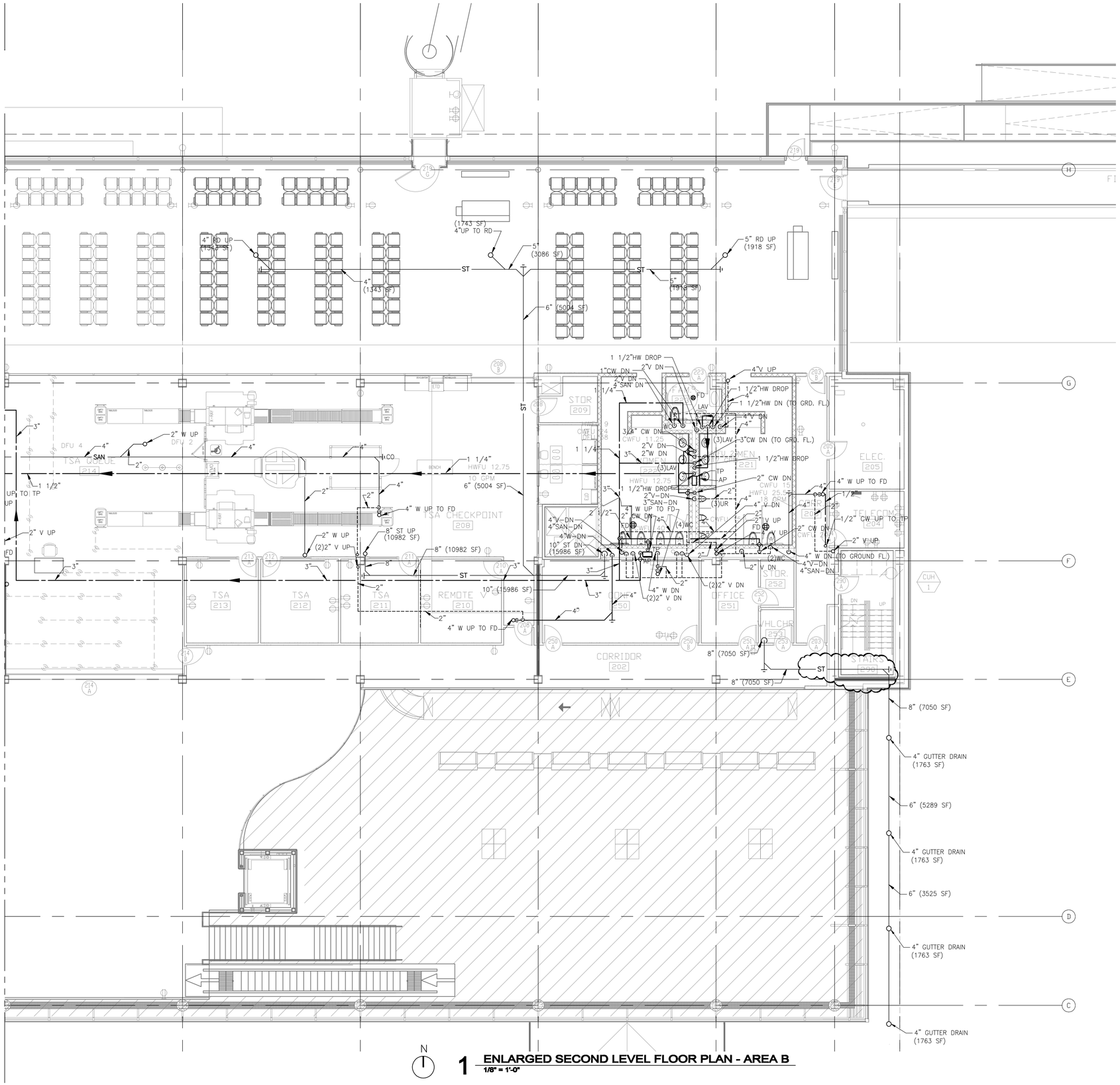

N

1 ENLARGED SECOND LEVEL FLOOR PLAN - AREA B

1/8" = 1'-0"

8' 4' 0 8' 16'

SCALE: 1/8" = 1'-0"

Drawing: H:\2008.00 Duluth Airport\LO CADD\SLO Plumbing\Dwgs\2008_P113.dwg Plotted on: 4/9/2010 3:45 PM Plotted by: Aaron. Nelson

RS&H.
IMPROVING YOUR WORLD

Reynolds, Smith and Hills, Inc.
4525 Airport Approach Rd, Ste A
Duluth, Minnesota 55811
218-722-1227 Fax: 218-722-1052
www.rsandh.com

DULUTH AIRPORT AUTHORITY

DULUTH
INTERNATIONAL
AIRPORT
DULUTH, MN

NEW TERMINAL
DESIGN

CONSULTANTS

Interior Architects:
SJA ARCHITECTS
11 E Superior Street Suite 245, Duluth MN 55802
TEL: (218) 724-8876 / FAX: (218) 724-8717

Structural Engineers:
MBJ CONSULTING ENG.
501 Lake Avenue South, Suite 300, Duluth MN 55802
TEL: (218) 723-1020 / FAX: (218) 723-0589

MEP/FP Engineers:
COSENTINI ASSOCIATES INC.
1 South Wacker Drive, 37th Floor, Chicago IL 60606
TEL: (312) 201-7400 / FAX: (312) 201-0201

Baggage Handling Systems Consultants:
BNP ASSOCIATES INC.
101 East Ridge Office Park, Suite 100, Danbury CT 06810
TEL: (203) 792-3035 / FAX: (203) 792-4020

Landscaping Consultants:
APPOLD DESIGN
2432 East First Street, Duluth MN 55812
TEL: (218) 391-3070

SEAL

REVISIONS

NO.	DESCRIPTION	DATE

DATE ISSUED: 04-12-10
REVIEWED BY: XXX
DRAWN BY: SA
DESIGNED BY: SA

AEP PROJECT NUMBER
213-1882-091

© 2006 REYNOLDS, SMITH AND HILLS INC.

SHEET TITLE

ENLARGED
SECOND FLOOR
PLUMBING
PLAN AREA B

SHEET NUMBER

P1-13

90% NOT FOR
CONSTRUCTION

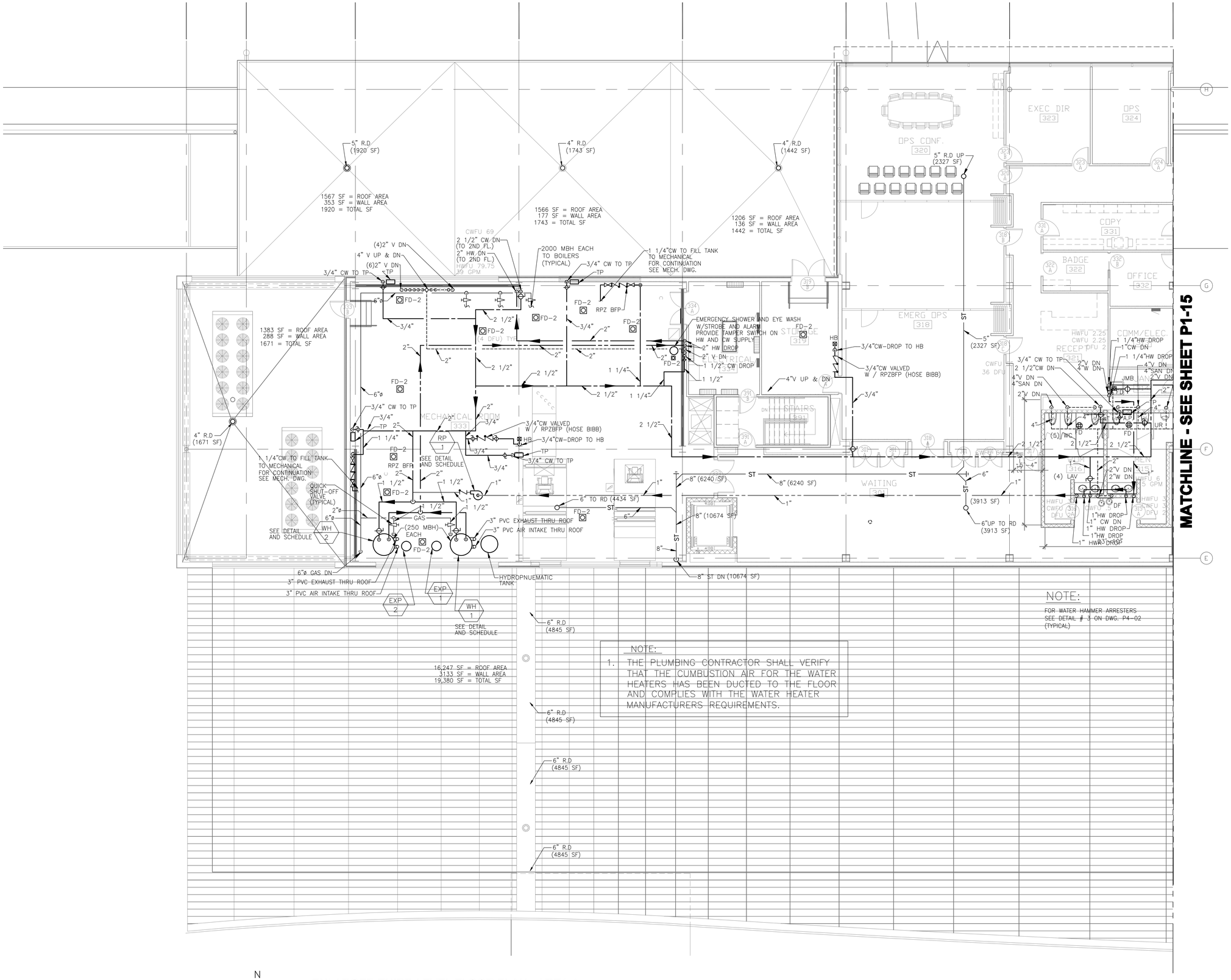

N

1 ENLARGED THIRD LEVEL FLOOR PLAN - AREA A

1/8" = 1'-0"

8' 4' 0 8' 16'

SCALE: 1/8" = 1'-0"

Drawing: H:\2030.00 Duluth Airport\A0 CADD\(B.I) Plumbing\Dwgs\2030_P114.dwg Plotted on: 4/9/2010 3:45 PM Plotted by: Ahmed, Salman

RS&H. IMPROVING YOUR WORLD

Reynolds, Smith and Hills, Inc.
4525 Airport Approach Rd, Ste A
Duluth, Minnesota 55811
218-722-1227 Fax: 218-722-1052
www.rsandh.com

DULUTH AIRPORT AUTHORITY

DULUTH INTERNATIONAL AIRPORT DULUTH, MN

NEW TERMINAL DESIGN

CONSULTANTS

Interior Architects:
SJA ARCHITECTS
11 E Superior Street Suite 245, Duluth MN 55802
TEL: (218) 724-5575 / FAX: (218) 724-5717

Structural Engineers:
MBJ CONSULTING ENG.
501 Lake Avenue South, Suite 300, Duluth MN 55802
TEL: (218) 723-1030 / FAX: (218) 723-0589

MEP/FP Engineers:
COSENTINI ASSOCIATES INC.
1 South Wacker Drive, 37th Floor, Chicago IL 60606
TEL: (312) 201-7400 / FAX: (312) 201-0201

Baggage Handling Systems Consultants:
BNP ASSOCIATES INC.
101 East Ridge Office Park, Suite 100, Danbury CT 06810
TEL: (203) 792-3035 / FAX: (203) 792-4069

Landscaping Consultants:
APPOLD DESIGN
3432 East First Street, Duluth MN 55812
TEL: (218) 201-3070

SEAL

REVISIONS

NO.	DESCRIPTION	DATE

DATE ISSUED: 04-12-10
REVIEWED BY: XXX
DRAWN BY: HV/SA
DESIGNED BY: SA

AEP PROJECT NUMBER
213-1882-091

© 2006 REYNOLDS, SMITH AND HILLS INC.

SHEET TITLE

ENLARGED THIRD FLOOR PLUMBING PLAN AREA A

SHEET NUMBER

P1-14

90% NOT FOR CONSTRUCTION

MATCHLINE - SEE SHEET P1-14

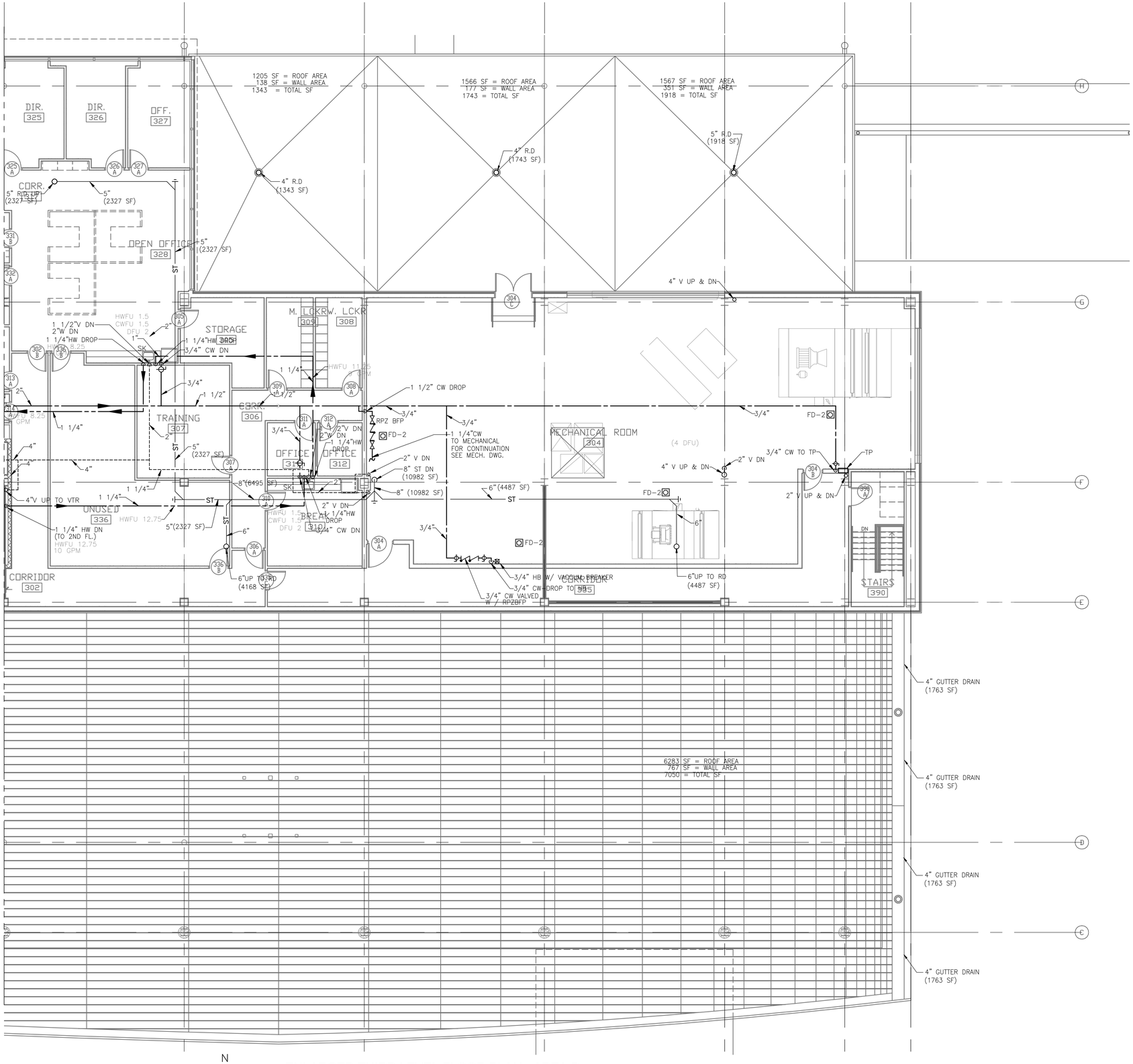

N

1 ENLARGED THIRD LEVEL FLOOR PLAN - AREA B
1/8" = 1'-0"

8' 4' 0 8' 16'
SCALE: 1/8" = 1'-0"

RS&H
IMPROVING YOUR WORLD

Reynolds, Smith and Hills, Inc.
4525 Airport Approach Rd, Ste A
Duluth, Minnesota 55811
218-722-1227 Fax: 218-722-1052
www.rsandh.com

DULUTH AIRPORT AUTHORITY

DULUTH INTERNATIONAL AIRPORT
DULUTH, MN

NEW TERMINAL DESIGN

CONSULTANTS

Interior Architects:
SJA ARCHITECTS
11 E Superior Street Suite 340, Duluth MN 55802
TEL: (218) 724-5576 / FAX: (218) 724-5717

Structural Engineers:
MBJ CONSULTING ENG.
501 Lake Avenue South, Suite 300, Duluth MN 55802
TEL: (218) 723-1050 / FAX: (218) 723-5000

M/E/P/FP Engineers:
COSENTINI ASSOCIATES INC.
1 South Wacker Drive, 37th Floor, Chicago IL 60606
TEL: (312) 201-7400 / FAX: (312) 201-0001

Baggage Handling Systems Consultants:
BNP ASSOCIATES INC.
101 East Ridge Office Park, Suite 100, Danbury CT 06810
TEL: (203) 793-3000 / FAX: (203) 793-4000

Landscaping Consultants:
APPOLD DESIGN
2432 East First Street, Duluth MN 55812
TEL: (218) 591-5070

SEAL

REVISIONS

NO.	DESCRIPTION	DATE

DATE ISSUED: 04-12-10
REVIEWED BY: XXX
DRAWN BY: HV/SA
DESIGNED BY: SA

AEP PROJECT NUMBER
213-1882-091

© 2006 REYNOLDS, SMITH AND HILLS INC.

SHEET TITLE
ENLARGED THIRD FLOOR PLUMBING PLAN AREA B

SHEET NUMBER
P1-15

90% NOT FOR CONSTRUCTION

Drawing: I:\5538.00 Duluth Airport\5.0 CADD\(5.0) Plumbing\Dwgs\5538_P115.dwg Plotted on: 4/9/2010 3:40 PM Plotted by: Ahmed, Saleem

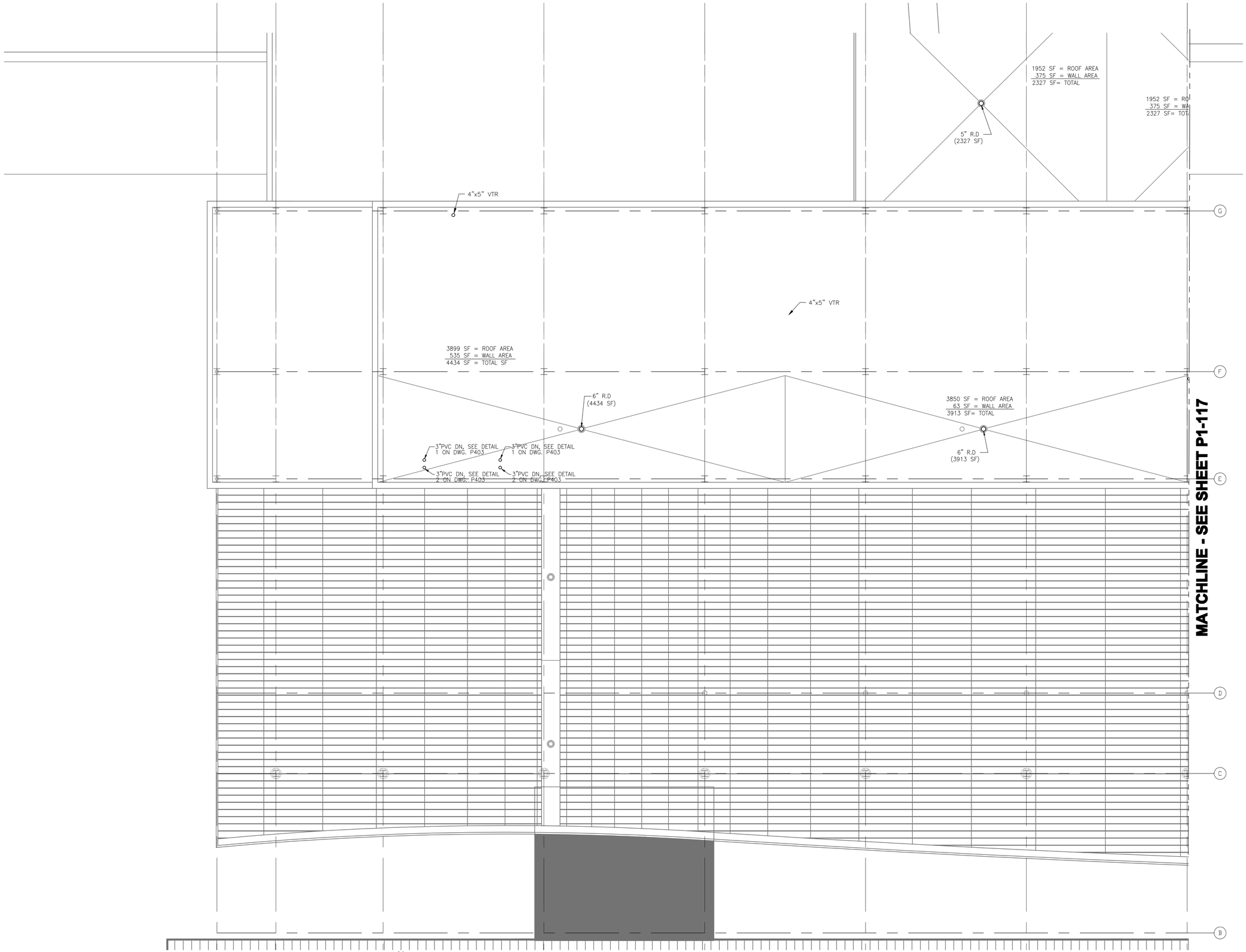

1 ENLARGED ROOF LEVEL PLAN - AREA A
1/8" = 1'-0"

8' 4' 0 8' 16'
SCALE: 1/8" = 1'-0"

RS&H
IMPROVING YOUR WORLD

Reynolds, Smith and Hills, Inc.
4525 Airport Approach Rd, Ste A
Duluth, Minnesota 55811
218-722-1227 Fax: 218-722-1052
www.reandh.com

DULUTH AIRPORT AUTHORITY

DULUTH INTERNATIONAL AIRPORT
DULUTH, MN

NEW TERMINAL DESIGN

CONSULTANTS

Interior Architects:
SJA ARCHITECTS
11 E Superior Street Suite 340, Duluth MN 55802
TEL: (218) 724-5576 / FAX: (218) 724-5717

Structural Engineers:
MBJ CONSULTING ENG.
591 Lake Avenue South, Suite 300, Duluth MN 55802
TEL: (218) 722-1055 / FAX: (218) 722-5599

MEP/FP Engineers:
COSENTINI ASSOCIATES INC.
1 South Wacker Drive, 37th Floor, Chicago IL 60606
TEL: (312) 201-7400 / FAX: (312) 201-6001

Baggage Handling Systems Consultants:
BNP ASSOCIATES INC.
101 East Ridge Office Park, Suite 100, Danbury CT 06810
TEL: (203) 792-5500 / FAX: (203) 792-4920

Landscaping Consultants:
APPOLD DESIGN
2432 East First Street, Duluth MN 55812
TEL: (218) 591-5579

SEAL

MATCHLINE - SEE SHEET P1-17

REVISIONS

NO.	DESCRIPTION	DATE

DATE ISSUED: 04-12-10
REVIEWED BY: XXX
DRAWN BY: HV
DESIGNED BY: SA

AEP PROJECT NUMBER
213-1882-091

© 2006 REYNOLDS, SMITH AND HILLS INC.

SHEET TITLE
ENLARGED ROOF LEVEL PLUMBING PLAN AREA A

SHEET NUMBER
P1-16

90% NOT FOR CONSTRUCTION

Drawing: I:\5528.00 Duluth Airport\5.0 CADD\(5.0) Plumbing\Dwgs\5528_P116.dwg Plotted on: 4/9/2010 1:38 PM Plotted by: Volene, Henry

1 ENLARGED ROOF LEVEL PLAN - AREA B
1/8" = 1'-0"

8' 4' 0 8' 16'
SCALE: 1/8" = 1'-0"

RS&H
IMPROVING YOUR WORLD

Reynolds, Smith and Hills, Inc.
4525 Airport Approach Rd, Ste A
Duluth, Minnesota 55811
218-722-1227 Fax: 218-722-1052
www.reandh.com

DULUTH AIRPORT AUTHORITY

DULUTH INTERNATIONAL AIRPORT
DULUTH, MN

NEW TERMINAL DESIGN

CONSULTANTS

Interior Architects:
SJA ARCHITECTS
11 E Superior Street Suite 340, Duluth MN 55802
TEL: (218) 724-5576 / FAX: (218) 724-5717

Structural Engineers:
MBJ CONSULTING ENG.
501 Lake Avenue South, Suite 300, Duluth MN 55802
TEL: (218) 723-1050 / FAX: (218) 723-5000

MEP/FP Engineers:
COSENTINI ASSOCIATES INC.
1 South Wacker Drive, 27th Floor, Chicago IL 60606
TEL: (312) 391-7400 / FAX: (312) 391-6091

Baggage Handling Systems Consultants:
BNP ASSOCIATES INC.
101 East Ridge Office Park, Suite 100, Danbury CT 06810
TEL: (203) 792-5500 / FAX: (203) 792-4920

Landscaping Consultants:
APPOLD DESIGN
2432 East First Street, Duluth MN 55812
TEL: (218) 591-5079

SEAL

REVISIONS

NO.	DESCRIPTION	DATE

DATE ISSUED: 04-12-10
REVIEWED BY: XXX
DRAWN BY: HV
DESIGNED BY: SA

AEP PROJECT NUMBER
213-1882-091

© 2006 REYNOLDS, SMITH AND HILLS INC.

SHEET TITLE
ENLARGED ROOF LEVEL PLUMBING PLAN AREA B

SHEET NUMBER
P1-17

90% NOT FOR CONSTRUCTION

Drawing: I:\5555.00 Duluth Airport\5.0 CADD\(5.0) Plumbing\Dwgs\5555_P117.dwg Plotted on: 4/9/2010 1:38 PM Plotted by: Volene, Henry

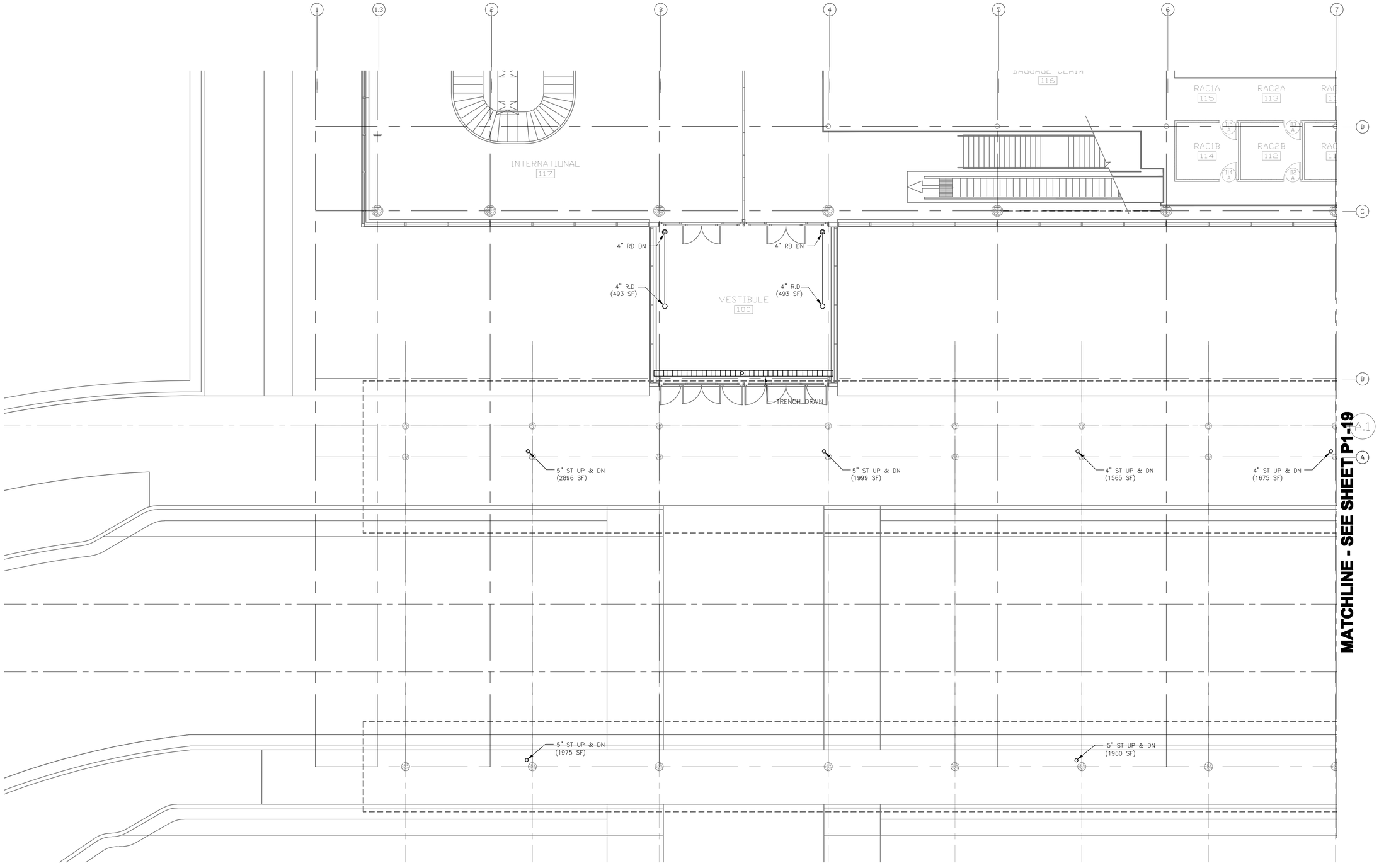

N

1 ENLARGED FIRST LEVEL FLOOR PLAN - AREA A
1/8" = 1'-0"

8' 4' 0 8' 16'
SCALE: 1/8" = 1'-0"

RS&H
IMPROVING YOUR WORLD

Reynolds, Smith and Hills, Inc.
4525 Airport Approach Rd, Ste A
Duluth, Minnesota 55811
218-722-1227 Fax: 218-722-1052
www.rsandh.com

DULUTH AIRPORT AUTHORITY

DULUTH INTERNATIONAL AIRPORT
DULUTH, MN

NEW TERMINAL DESIGN

CONSULTANTS

Interior Architects:
SJA ARCHITECTS
11 E Superior Street Suite 340, Duluth MN 55802
TEL: (218) 724-5576 / FAX: (218) 724-5717

Structural Engineers:
MBJ CONSULTING ENG.
501 Lake Avenue South, Suite 300, Duluth MN 55802
TEL: (218) 723-1555 / FAX: (218) 723-5555

MEP/FP Engineers:
COSENTINI ASSOCIATES INC.
1 South Wacker Drive, 37th Floor, Chicago IL 60606
TEL: (312) 201-7455 / FAX: (312) 201-6091

Baggage Handling Systems Consultants:
BNP ASSOCIATES INC.
101 East Ridge Office Park, Suite 100, Danbury CT 06810
TEL: (203) 792-5500 / FAX: (203) 792-4500

Landscaping Consultants:
APPOLD DESIGN
2432 East First Street, Duluth MN 55812
TEL: (218) 591-5579

SEAL

REVISIONS

NO.	DESCRIPTION	DATE

DATE ISSUED: 04-12-10
REVIEWED BY: XXX
DRAWN BY: SA
DESIGNED BY: SA

AEP PROJECT NUMBER
213-1882-091

© 2006 REYNOLDS, SMITH AND HILLS INC.

SHEET TITLE
ENLARGED FIRST FLOOR PLUMBING PLAN PLAN AREA A CANOPY

SHEET NUMBER
P1-18

90% NOT FOR CONSTRUCTION

Drawing: I:\5528.00 Duluth Airport\5.0 CADD\(5.0) Plumbing\Dwgs\5528_P118.dwg Plotted on: 4/9/2010 1:37 PM Plotted by: Volene, Henry

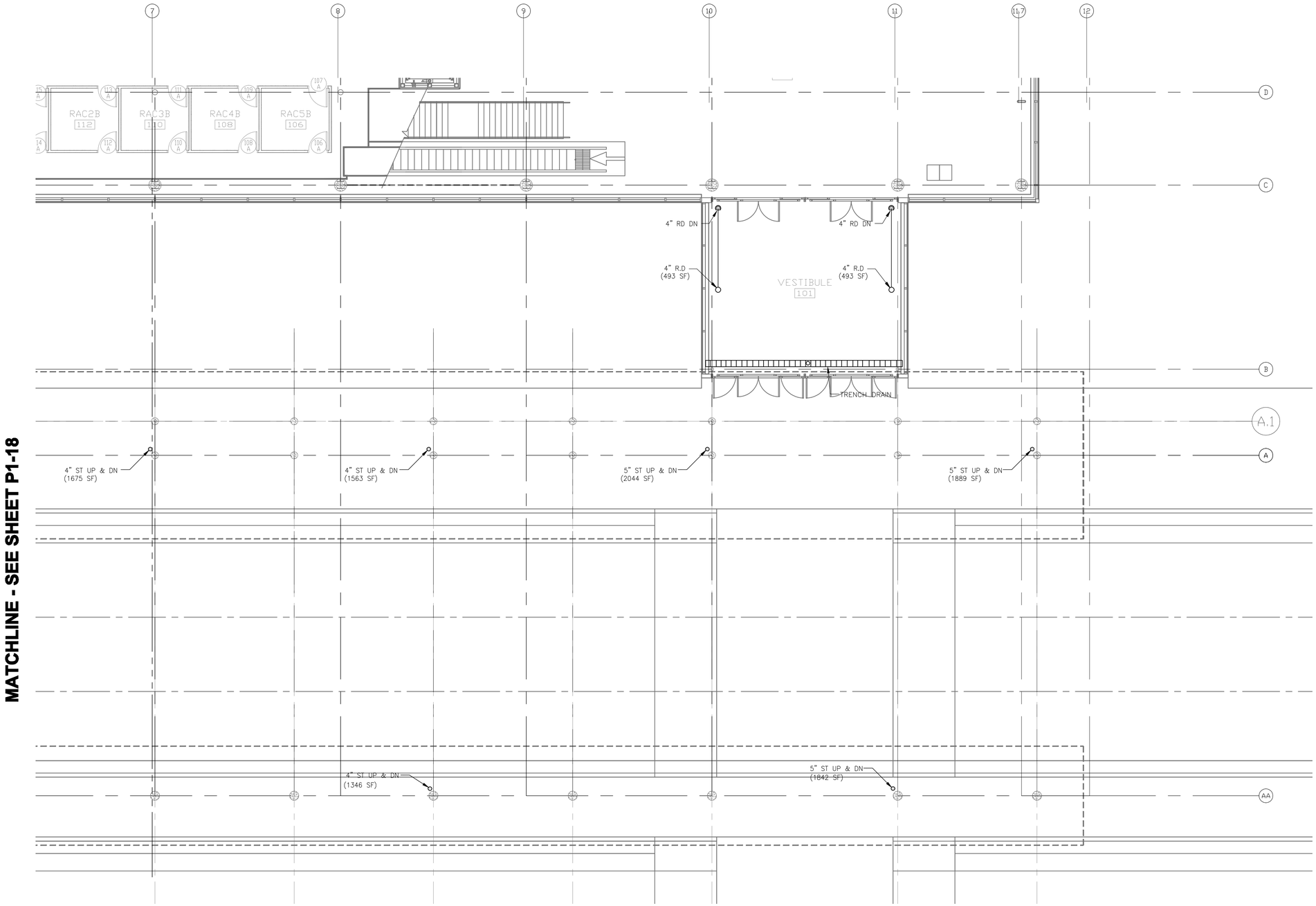

N

1 ENLARGED FIRST LEVEL FLOOR PLAN - AREA B
1/8" = 1'-0"

8' 4' 0 8' 16'
SCALE: 1/8" = 1'-0"

RS&H
IMPROVING YOUR WORLD

Reynolds, Smith and Hills, Inc.
4525 Airport Approach Rd, Ste A
Duluth, Minnesota 55811
218-722-1227 Fax: 218-722-1052
www.reandh.com

DULUTH AIRPORT AUTHORITY

DULUTH INTERNATIONAL AIRPORT
DULUTH, MN

NEW TERMINAL DESIGN

CONSULTANTS

Interior Architects:
SJA ARCHITECTS
11 E Superior Street Suite 340, Duluth MN 55802
TEL: (218) 724-5576 / FAX: (218) 724-5717

Structural Engineers:
MBJ CONSULTING ENG.
501 Lake Avenue South, Suite 310, Duluth MN 55802
TEL: (218) 722-1055 / FAX: (218) 722-5930

MEP/FP Engineers:
COSENTINI ASSOCIATES INC.
1 South Wacker Drive, 37th Floor, Chicago IL 60606
TEL: (312) 201-7400 / FAX: (312) 201-6001

Baggage Handling Systems Consultants:
BNP ASSOCIATES INC.
101 East Ridge Office Park, Suite 100, Danbury CT 06810
TEL: (203) 792-3500 / FAX: (203) 792-4920

Landscaping Consultants:
APPOLD DESIGN
2432 East First Street, Duluth MN 55812
TEL: (218) 591-5579

SEAL

REVISIONS

NO.	DESCRIPTION	DATE

DATE ISSUED: 04-12-10
REVIEWED BY: XXX
DRAWN BY: SA
DESIGNED BY: SA

AEP PROJECT NUMBER
213-1882-091

© 2006 REYNOLDS, SMITH AND HILLS INC.

SHEET TITLE
ENLARGED FIRST FLOOR PLUMBING PLAN PLAN AREA B CANOPY

SHEET NUMBER
P1-19

90% NOT FOR CONSTRUCTION

Drawing: I:\5555.00 Duluth Airport\5.0 CADD\(5.0) Plumbing\Dwgs\5555_P119.dwg Plotted on: 4/9/2010 1:36 PM Plotted by: Volano, Henry

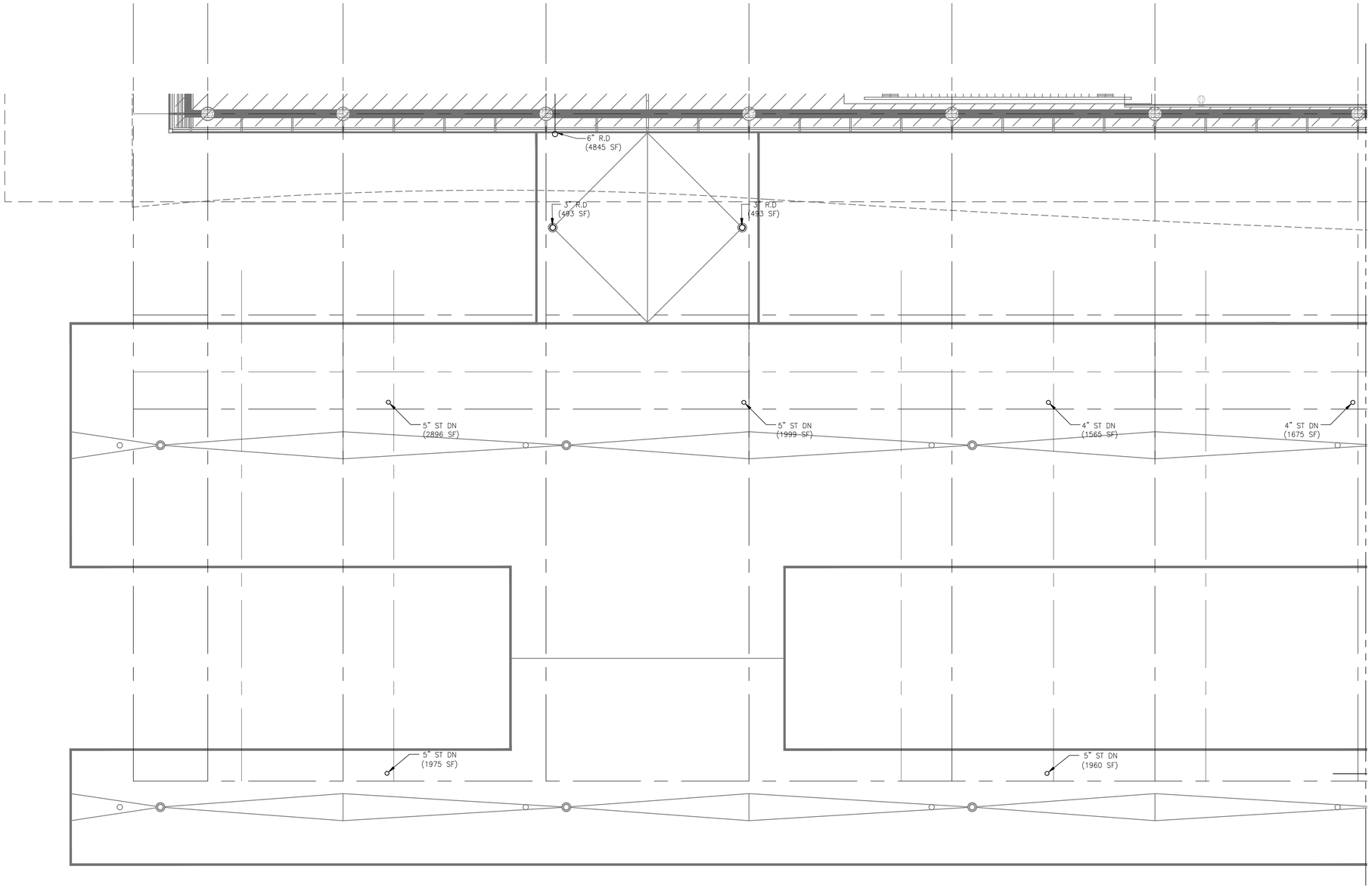

MATCHLINE - SEE SHEET P1-21

N

1 ENLARGED SECOND LEVEL FLOOR PLAN - AREA A
1/8" = 1'-0"

8' 4' 0 8' 16'
SCALE: 1/8" = 1'-0"

RS&H
IMPROVING YOUR WORLD

Reynolds, Smith and Hills, Inc.
4525 Airport Approach Rd, Ste A
Duluth, Minnesota 55811
218-722-1227 Fax: 218-722-1052
www.reandh.com

DULUTH AIRPORT AUTHORITY

DULUTH INTERNATIONAL AIRPORT
DULUTH, MN

NEW TERMINAL DESIGN

CONSULTANTS

Interior Architects:
SJA ARCHITECTS
11 E Superior Street Suite 340, Duluth MN 55802
TEL: (218) 724-5576 / FAX: (218) 724-5717

Structural Engineers:
MBJ CONSULTING ENG.
501 Lake Avenue South, Suite 300, Duluth MN 55802
TEL: (218) 723-1555 / FAX: (218) 723-5555

MEP/FP Engineers:
COSENTINI ASSOCIATES INC.
1 South Wacker Drive, 37th Floor, Chicago IL 60606
TEL: (312) 391-7400 / FAX: (312) 391-6091

Baggage Handling Systems Consultants:
BNP ASSOCIATES INC.
101 East Ridge Office Park, Suite 100, Danbury CT 06810
TEL: (203) 792-3500 / FAX: (203) 792-4500

Landscaping Consultants:
APPOLD DESIGN
2432 East First Street, Duluth MN 55812
TEL: (218) 591-5079

SEAL

REVISIONS

NO.	DESCRIPTION	DATE

DATE ISSUED: 04-12-10
REVIEWED BY: XXX
DRAWN BY: HV
DESIGNED BY: SA

AEP PROJECT NUMBER
213-1882-091

© 2006 REYNOLDS, SMITH AND HILLS INC.

SHEET TITLE
ENLARGED SECOND FLOOR PLUMBING PLAN AREA A CANOPY ROOF

SHEET NUMBER
P1-20

90% NOT FOR CONSTRUCTION

Drawing: I:\5555.00 Duluth Airport\5.0 CADD\(5.0) Plumbing\Dwgs\5555_P120.dwg Plotted on: 4/9/2010 1:35 PM Plotted by: Volano, Henry

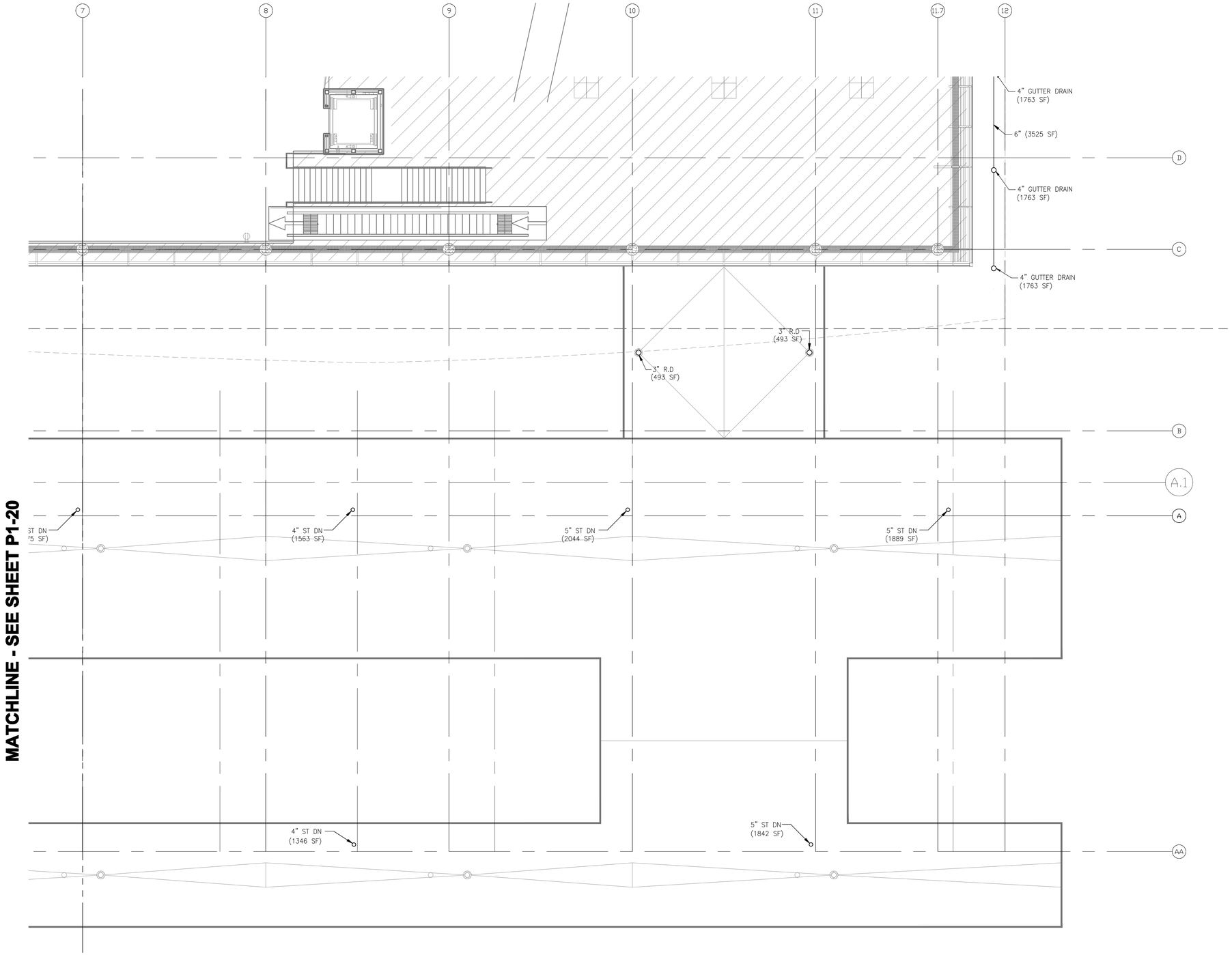

N

1 ENLARGED SECOND LEVEL FLOOR PLAN - AREA B
1/8" = 1'-0"

8' 4' 0 8' 16'
SCALE: 1/8" = 1'-0"

RS&H
IMPROVING YOUR WORLD

Reynolds, Smith and Hills, Inc.
4525 Airport Approach Rd, Ste A
Duluth, Minnesota 55811
218-722-1227 Fax: 218-722-1052
www.rsandh.com

DULUTH AIRPORT AUTHORITY

DULUTH INTERNATIONAL AIRPORT
DULUTH, MN

NEW TERMINAL DESIGN

CONSULTANTS

Interior Architects:
SJA ARCHITECTS
11 E Superior Street Suite 340, Duluth MN 55802
TEL: (218) 724-5576 / FAX: (218) 724-5717

Structural Engineers:
MBJ CONSULTING ENG.
501 Lake Avenue South, Suite 300, Duluth MN 55802
TEL: (218) 723-1555 / FAX: (218) 723-5555

MEP/FP Engineers:
COSENTINI ASSOCIATES INC.
1 South Wacker Drive, 37th Floor, Chicago IL 60606
TEL: (312) 201-7400 / FAX: (312) 201-6001

Baggage Handling Systems Consultants:
BNP ASSOCIATES INC.
101 East Ridge Office Park, Suite 100, Danbury CT 06810
TEL: (203) 792-3500 / FAX: (203) 792-4200

Landscaping Consultants:
APPOLD DESIGN
2432 East First Street, Duluth MN 55812
TEL: (218) 591-5579

SEAL

REVISIONS

NO.	DESCRIPTION	DATE

DATE ISSUED: 04-12-10
REVIEWED BY: XXX
DRAWN BY: HV
DESIGNED BY: SA

AEP PROJECT NUMBER
213-1882-091

© 2006 REYNOLDS, SMITH AND HILLS INC.

SHEET TITLE
ENLARGED SECOND FLOOR PLUMBING PLAN AREA B CANOPY ROOF

SHEET NUMBER
P1-21

90% NOT FOR CONSTRUCTION

Drawing: I:\5528.00 Duluth Airport\5.0 CADD\(5.0) Plumbing\Dwgs\5528_P121.dwg Plotted on: 4/9/2010 1:34 PM Plotted by: Volona, Henry

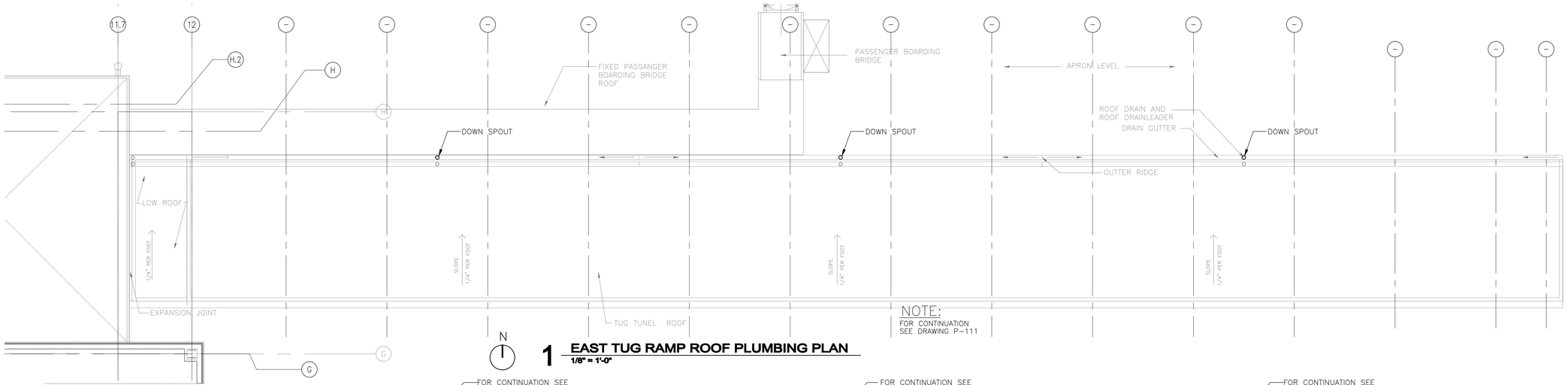

N

1 EAST TUG RAMP ROOF PLUMBING PLAN
1/8" = 1'-0"

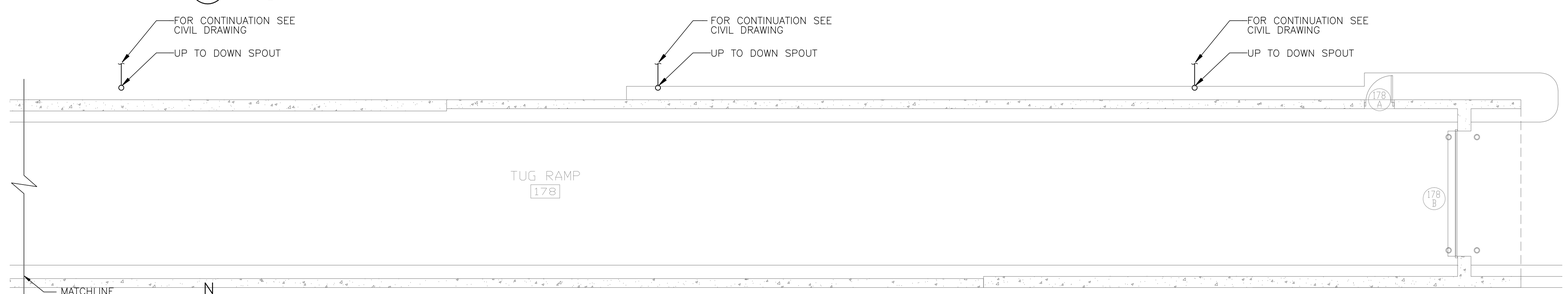

N

2 EAST TUG RAMP FIRST FLOOR PLUMBING PLAN
1/8" = 1'-0"

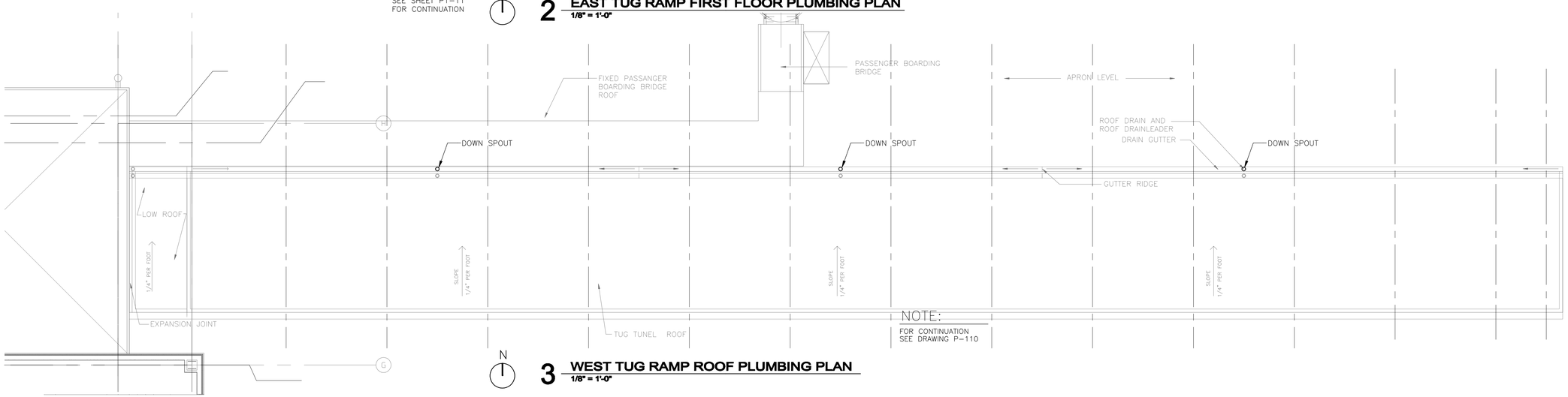

N

3 WEST TUG RAMP ROOF PLUMBING PLAN
1/8" = 1'-0"

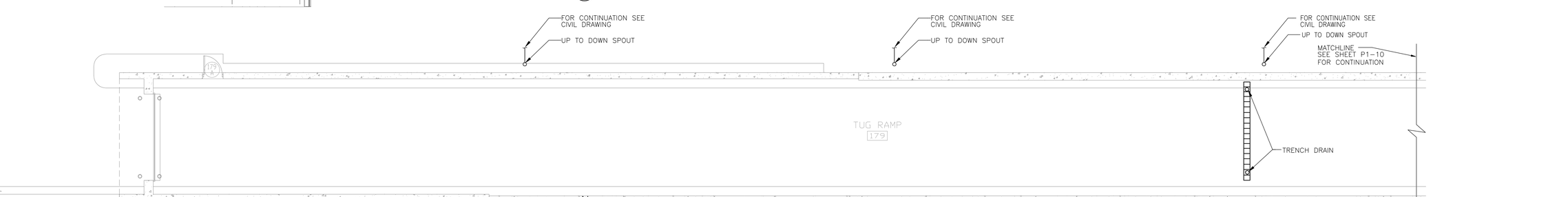

N

4 WEST TUG RAMP FIRST FLOOR PLUMBING PLAN
1/8" = 1'-0"

8' 4' 0 8' 16'
SCALE: 1/8" = 1'-0"

RS&H
IMPROVING YOUR WORLD

Reynolds, Smith and Hills, Inc.
4525 Airport Approach Rd, Ste A
Duluth, Minnesota 55811
218-722-1227 Fax: 218-722-1052
www.rsandh.com

DULUTH AIRPORT AUTHORITY

DULUTH INTERNATIONAL AIRPORT
DULUTH, MN

NEW TERMINAL DESIGN

CONSULTANTS

Interior Architects:
SJA ARCHITECTS
11 E Superior Street Suite 340, Duluth MN 55802
TEL: (218) 724-5576 / FAX: (218) 724-5717

Structural Engineers:
MBJ CONSULTING ENG.
501 Lake Avenue South, Suite 300, Duluth MN 55802
TEL: (218) 723-1650 / FAX: (218) 723-5550

MEP/FP Engineers:
COSENTINI ASSOCIATES INC.
1 South Wacker Drive, 37th Floor, Chicago IL 60606
TEL: (312) 201-7400 / FAX: (312) 201-6001

Baggage Handling Systems Consultants:
BNP ASSOCIATES INC.
101 East Ridge Office Park, Suite 100, Danbury CT 06810
TEL: (203) 792-5500 / FAX: (203) 792-4500

Landscaping Consultants:
APPOLD DESIGN
2432 East First Street, Duluth MN 55812
TEL: (218) 591-5079

SEAL

REVISIONS

NO.	DESCRIPTION	DATE

DATE ISSUED: 04-12-10
REVIEWED BY: XXX
DRAWN BY: HV
DESIGNED BY: SA

AEP PROJECT NUMBER
213-1882-091

© 2006 REYNOLDS, SMITH AND HILLS INC.

SHEET TITLE
TUG RAMP ROOF PLUMBING PLAN

SHEET NUMBER
P1-22

90% NOT FOR CONSTRUCTION

Drawing: H:\5500.00 Duluth Airport\5.0 CADD\(5.0) Plumbing\Dwgs\5500_P122.dwg Plotted on: 4/9/2010 1:33 PM Plotted by: Volene, Henry

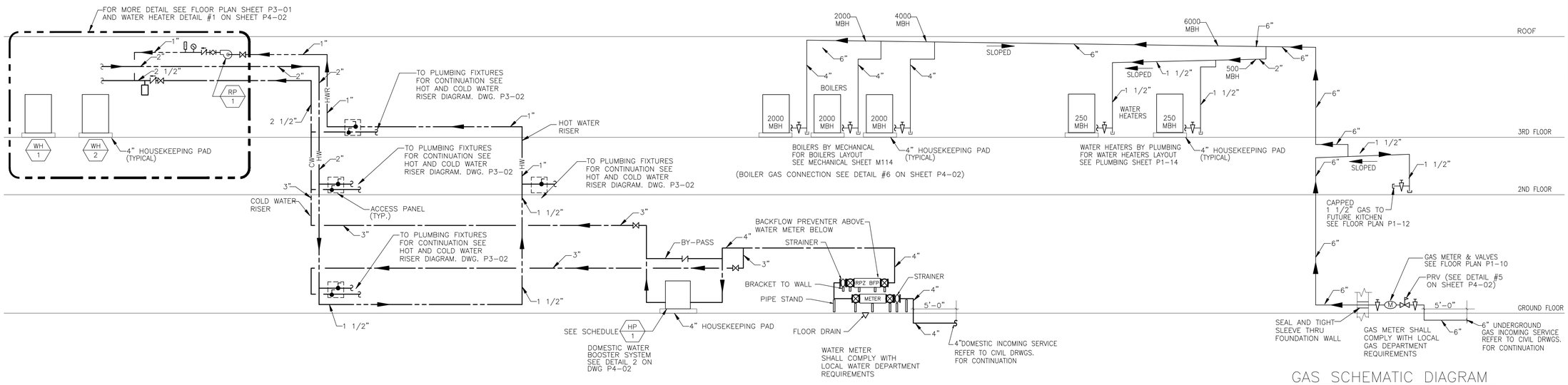

WATER SCHEMATIC DIAGRAM

NOT TO SCALE

GAS SCHEMATIC DIAGRAM

NOT TO SCALE

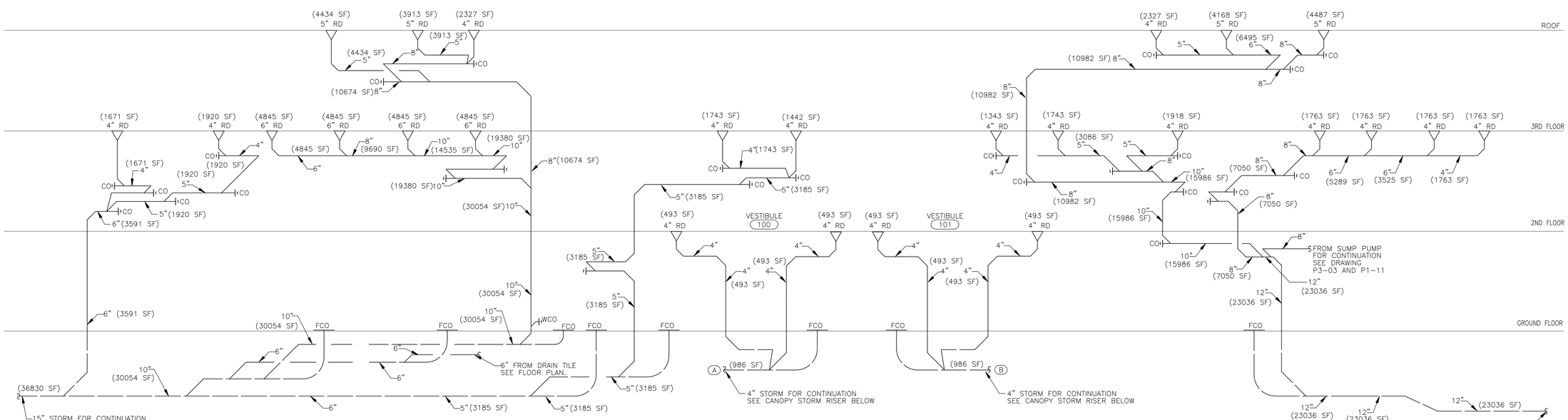

STORM RISER DIAGRAM

NOT TO SCALE

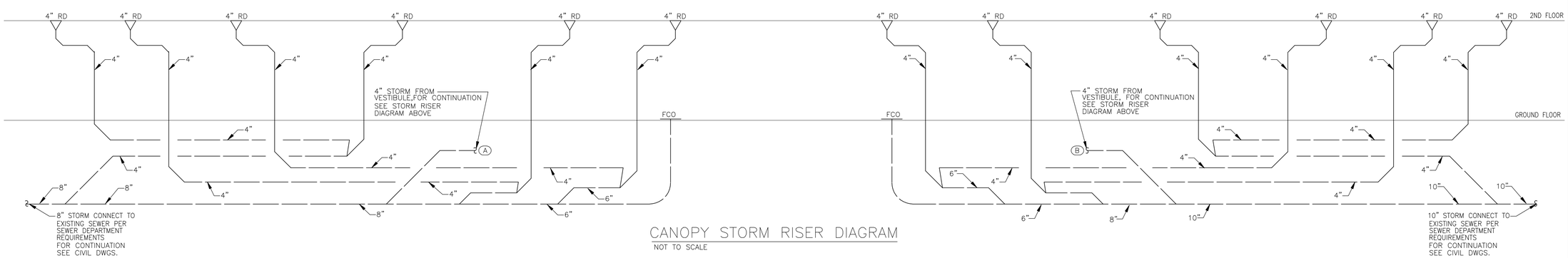

CANOPY STORM RISER DIAGRAM

NOT TO SCALE

RS&H. IMPROVING YOUR WORLD

Reynolds, Smith and Hills, Inc.
4525 Airport Approach Rd, Ste A
Duluth, Minnesota 55811
218-722-1227 Fax: 218-722-1052
www.rsandh.com

DULUTH AIRPORT AUTHORITY

DULUTH INTERNATIONAL AIRPORT DULUTH, MN

NEW TERMINAL DESIGN

CONSULTANTS

Interior Architects:
SJA ARCHITECTS
11 E Superior Street Suite 245, Duluth MN 55802
TEL: (218) 724-5976 / FAX: (218) 724-5717

Structural Engineers:
MBJ CONSULTING ENG.
824 Lake Avenue South, Suite 300, Duluth MN 55802
TEL: (218) 723-1020 / FAX: (218) 723-0589

MEP/FP Engineers:
COSENTINI ASSOCIATES INC.
1 South Wacker Drive, 37th Floor, Chicago IL 60603
TEL: (312) 201-7400 / FAX: (312) 201-0201

Baggage Handling Systems Consultants:
BHP ASSOCIATES INC.
101 East Ridge Office Park, Suite 100, Danbury CT 06810
TEL: (203) 792-2000 / FAX: (203) 792-4020

Landscaping Consultants:
APPOLD DESIGN
2432 East First Street, Duluth MN 55812
TEL: (218) 201-3979

SEAL

REVISIONS

NO.	DESCRIPTION	DATE

DATE ISSUED: 04-12-10
REVIEWED BY: XXX
DRAWN BY: SA
DESIGNED BY: SA

AEP PROJECT NUMBER
213-1882-091

© 2006 REYNOLDS, SMITH AND HILLS INC.

SHEET TITLE
WATER SCHEMATIC, GAS SCHEMATIC AND STORM RISER DIAGRAM

SHEET NUMBER
P3-01

90% NOT FOR CONSTRUCTION

Drawing: H:\2882.00 Duluth Airport\5.0 CADD\5.0 Plumbing\Dwgs\2882_P301.dwg Plotted on: 4/9/2010 1:21 PM Plotted by: Velasco, Henry

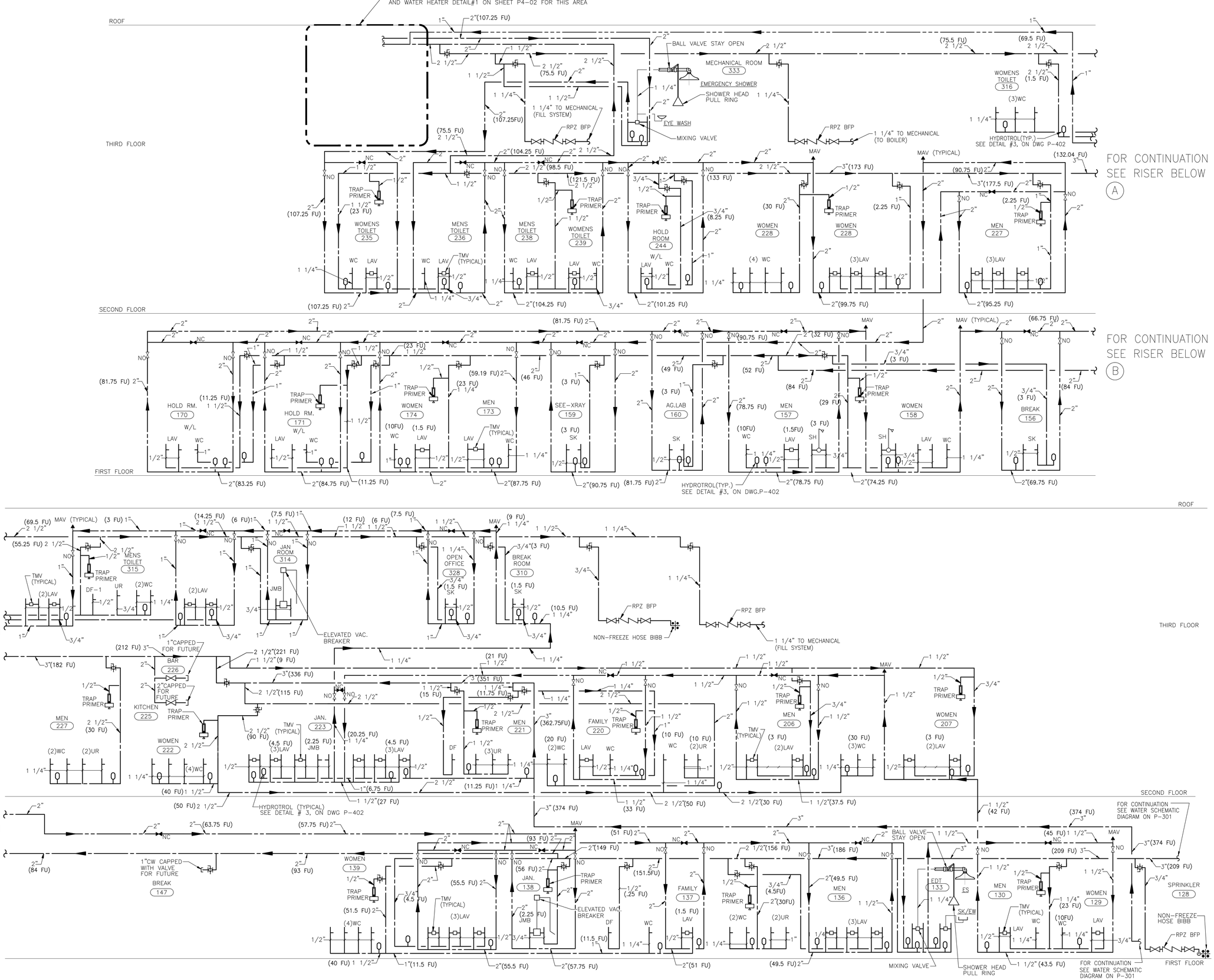

RS&H.
IMPROVING YOUR WORLD

Reynolds, Smith and Hills, Inc.
4525 Airport Approach Rd, Ste A
Duluth, Minnesota 55811
218-722-1227 Fax: 218-722-1052
www.rsandh.com

DULUTH AIRPORT AUTHORITY

DULUTH INTERNATIONAL AIRPORT DULUTH, MN

NEW TERMINAL DESIGN

CONSULTANTS

Interior Architects:
SJA ARCHITECTS
11 E Superior Street Suite 345, Duluth MN 55802
TEL: (218) 724-5976 / FAX: (218) 724-5717

Structural Engineers:
MBJ CONSULTING ENG.
501 Lake Avenue South, Suite 300, Duluth MN 55802
TEL: (218) 722-1020 / FAX: (218) 722-0589

MEP/FP Engineers:
COSENTINI ASSOCIATES INC.
1 South Wacker Drive, 37th Floor, Chicago IL 60606
TEL: (312) 201-7400 / FAX: (312) 201-0001

Baggage Handling Systems Consultants:
BNP ASSOCIATES INC.
101 East Ridge Office Park, Suite 100, Danbury CT 06810
TEL: (203) 792-2000 / FAX: (203) 792-4020

Landscaping Consultants:
APPOLD DESIGN
2432 East First Street, Duluth MN 55812
TEL: (218) 201-0979

SEAL

REVISIONS

NO.	DESCRIPTION	DATE

DATE ISSUED: 04-12-10
REVIEWED BY: XX
DRAWN BY: HV/SA
DESIGNED BY: SA

AEP PROJECT NUMBER
213-1882-091

© 2006 REYNOLDS, SMITH AND HILLS INC.

SHEET TITLE
COLD & HOT WATER RISER DIAGRAM

SHEET NUMBER
P3-02

90% NOT FOR CONSTRUCTION

Drawing: H:\2030.00 Duluth Airport\AJ0 CADD\BJ0 Plumbing\Dwgs\2030_P302.dwg Plotted on: 4/9/2010 1:30 PM Plotted by: Vulcan, Henry

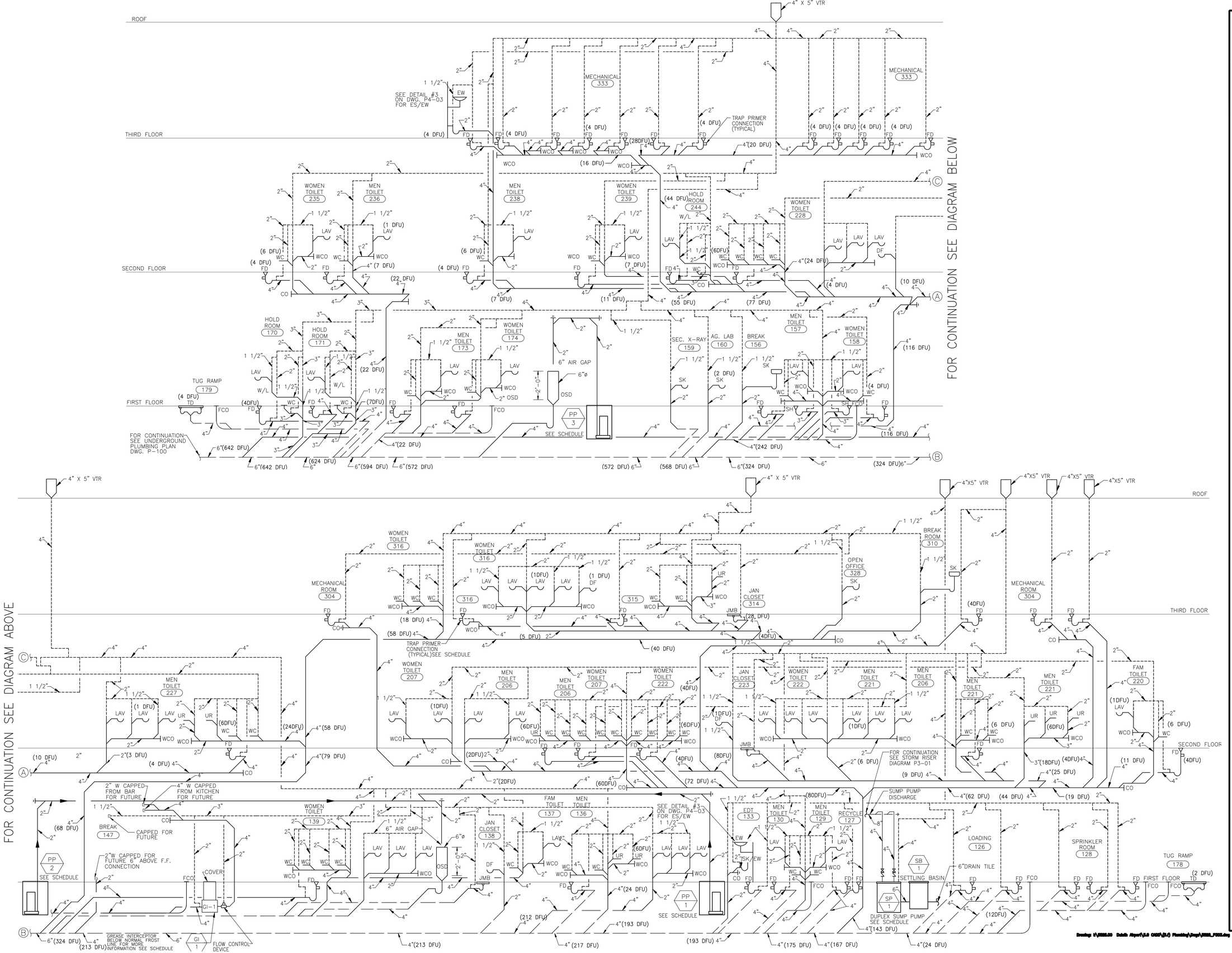

RS&H
IMPROVING YOUR WORLD

Reynolds, Smith and Hills, Inc.
4525 Airport Approach Rd, Ste A
Duluth, Minnesota 55811
218-722-1227 Fax: 218-722-1052
www.rsandh.com

DULUTH AIRPORT AUTHORITY

DULUTH INTERNATIONAL AIRPORT
DULUTH, MN

NEW TERMINAL DESIGN

CONSULTANTS

Interior Architects:
SJA ARCHITECTS
11 E Superior Street Suite 340, Duluth MN 55802
TEL: (218) 724-5576 / FAX: (218) 724-5717

Structural Engineers:
MBJ CONSULTING ENG.
501 Lake Avenue South, Suite 300, Duluth MN 55802
TEL: (218) 723-1555 / FAX: (218) 723-0555

MEP/FP Engineers:
COSENTINI ASSOCIATES INC.
1 South Wacker Drive, 37th Floor, Chicago IL 60606
TEL: (312) 201-7400 / FAX: (312) 201-0501

Baggage Handling Systems Consultants:
BNP ASSOCIATES INC.
101 East Ridge Office Park, Suite 100, Danbury CT 06810
TEL: (203) 792-3500 / FAX: (203) 792-4500

Landscaping Consultants:
APPOLD DESIGN
2432 East First Street, Duluth MN 55812
TEL: (218) 591-5079

SEAL

REVISIONS

NO.	DESCRIPTION	DATE

DATE ISSUED: 04-12-10
REVIEWED BY: XX
DRAWN BY: HV/SA
DESIGNED BY: SA

AEP PROJECT NUMBER
213-1882-091

© 2006 REYNOLDS, SMITH AND HILLS INC.

SHEET TITLE

WASTE AND VENT RISER DIAGRAM

SHEET NUMBER
P3-03

90% NOT FOR CONSTRUCTION

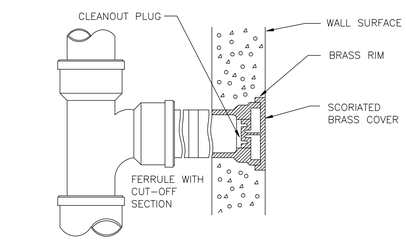

12 WALL CLEANOUT DETAIL
SCALE: NONE

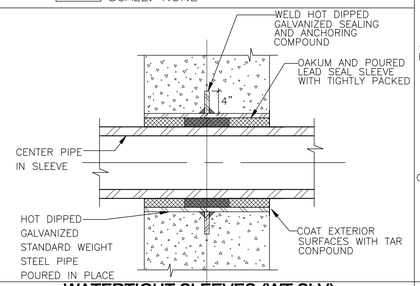

13 WATERTIGHT SLEEVES (WT SLV) THRU CONCRETE FOUNDATION WALLS
SCALE: NONE

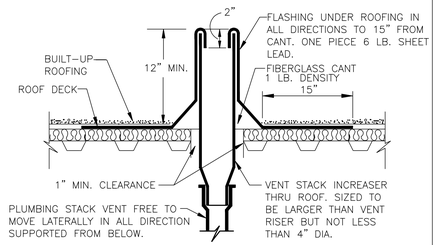

14 VENT THRU ROOF
SCALE: NONE

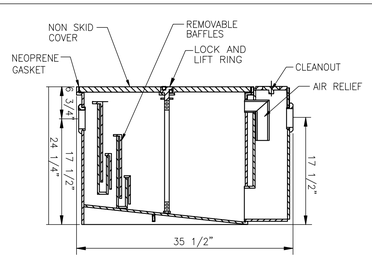

15 GREASE INTERCEPTOR
SCALE: NONE

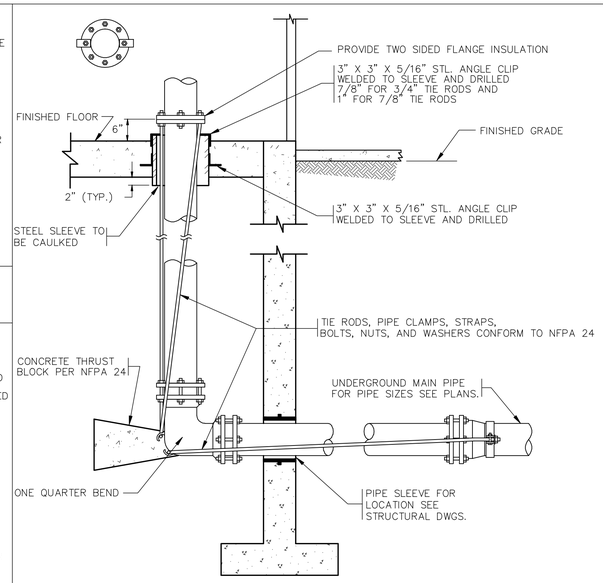

9 WATER MAIN ENTRANCE DETAIL
SCALE: NONE

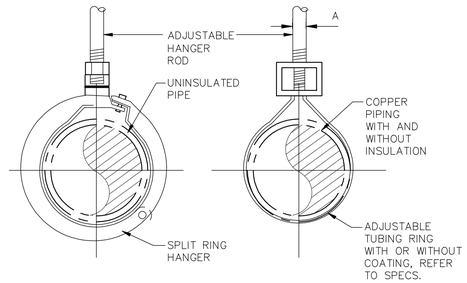

10 PIPE HANGER DETAIL
SCALE: NONE

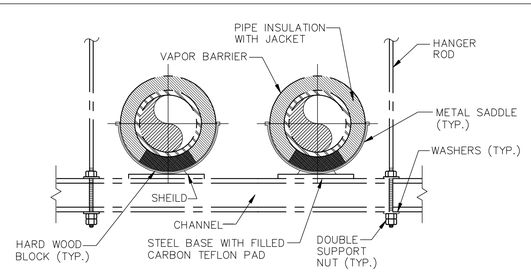

11 TRAPEZE HANGER DETAIL
SCALE: NONE

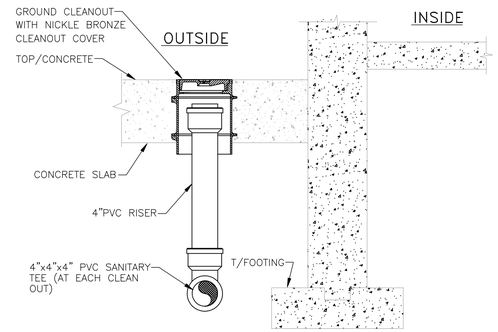

5 EXTERIOR SUB-SOIL DRAIN GROUND CLEANOUT DETAIL (GCO)
NOT TO SCALE

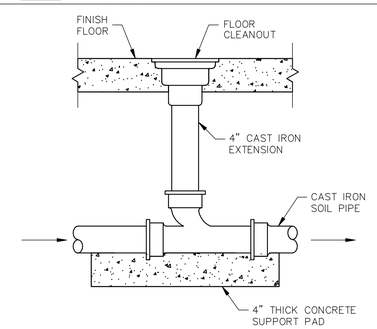

6 CLEANOUT DETAIL
SCALE: NONE

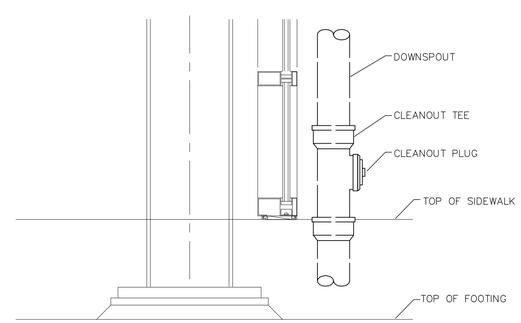

7 DOWNSPOUT DETAIL
SCALE: NONE

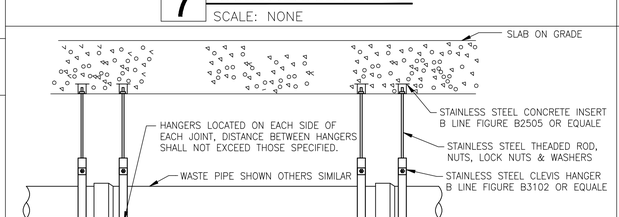

8 SLAB ON GRADE HANGER DETAIL
SCALE: NONE

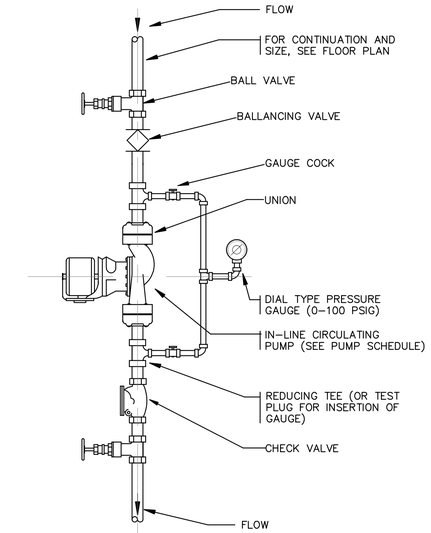

1 CIRCULATING PUMP DETAIL
SCALE: NONE

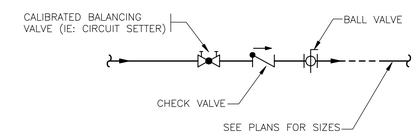

2 BALANCING VALVE DETAIL
SCALE: NONE

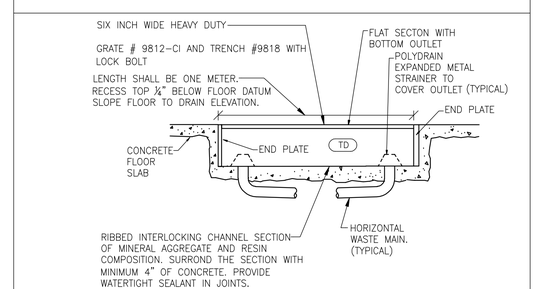

3 TRENCH DETAIL
SCALE: NONE

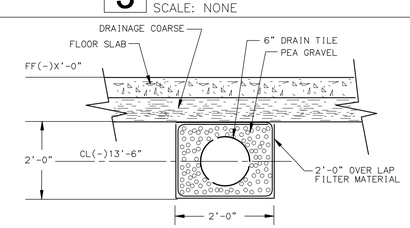

4 DRAIN TILE DETAIL
SCALE: NONE

RS&H. IMPROVING YOUR WORLD

Reynolds, Smith and Hills, Inc.
4525 Airport Approach Rd, Ste A
Duluth, Minnesota 55811
218-722-1227 Fax: 218-722-1052
www.rsandh.com

DULUTH AIRPORT AUTHORITY

DULUTH INTERNATIONAL AIRPORT DULUTH, MN

NEW TERMINAL DESIGN

CONSULTANTS

Interior Architects:
SJA ARCHITECTS
11 E Superior Street Suite 345, Duluth MN 55802
TEL: (218) 724-5576 / FAX: (218) 724-5717

Structural Engineers:
MBJ CONSULTING ENG.
501 Lake Avenue South, Suite 300, Duluth MN 55802
TEL: (218) 723-1020 / FAX: (218) 723-0589

MEP/FP Engineers:
COSENTINI ASSOCIATES INC.
1 South Wacker Drive, 37th Floor, Chicago IL 60606
TEL: (312) 201-7400 / FAX: (312) 201-0591

Baggage Handling Systems Consultants:
BNP ASSOCIATES INC.
101 East Ridge Office Park, Suite 105, Danbury CT 06810
TEL: (203) 792-2000 / FAX: (203) 792-4020

Landscaping Consultants:
APPOLD DESIGN
2432 East First Street, Duluth MN 55812
TEL: (218) 591-0570

SEAL

REVISIONS

NO.	DESCRIPTION	DATE

DATE ISSUED: 04-12-10
REVIEWED BY: XX
DRAWN BY: HV
DESIGNED BY: SA

AEP PROJECT NUMBER
213-1882-091

© 2006 REYNOLDS, SMITH AND HILLS INC.

SHEET TITLE
PLUMBING DETAILS

SHEET NUMBER
P4-01

90% NOT FOR CONSTRUCTION

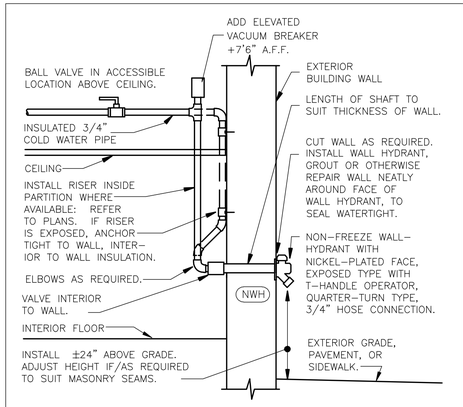

9 NON-FREEZE WALL HYDRANT
SCALE: NONE

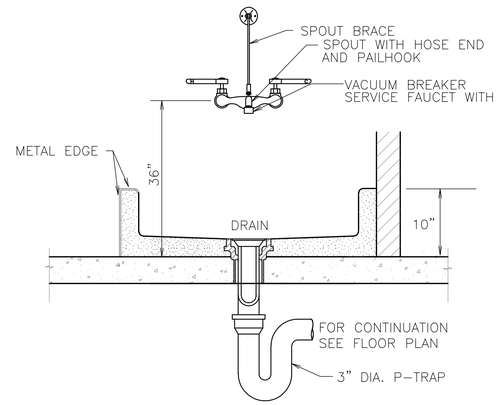

5 MOP SINK DETAIL
NO SCALE

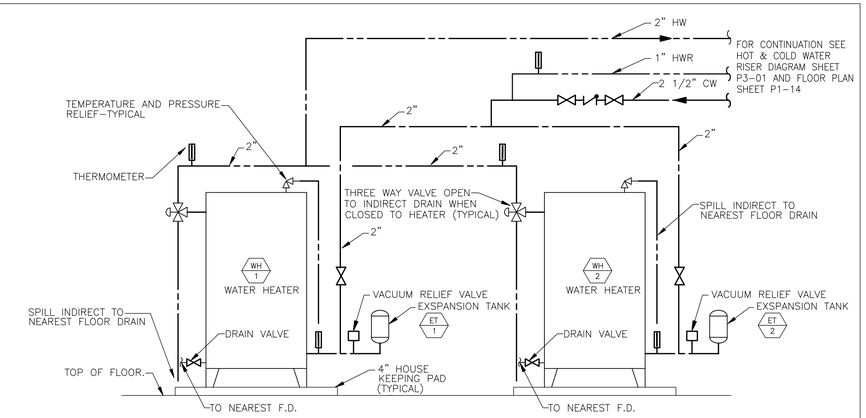

1 GAS FIRED HOT WATER HEATER DETAIL
SCALE: NONE

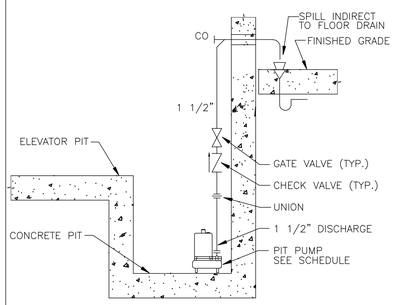

10 ELEVATOR PIT PUMP PIPING DETAIL
SCALE: NONE

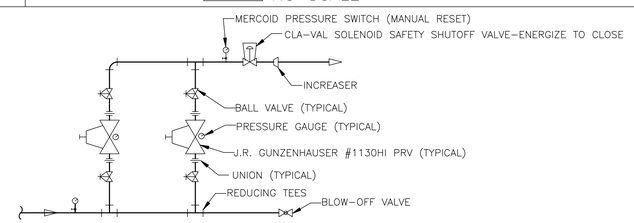

6 GAS PRV DETAIL
NO SCALE

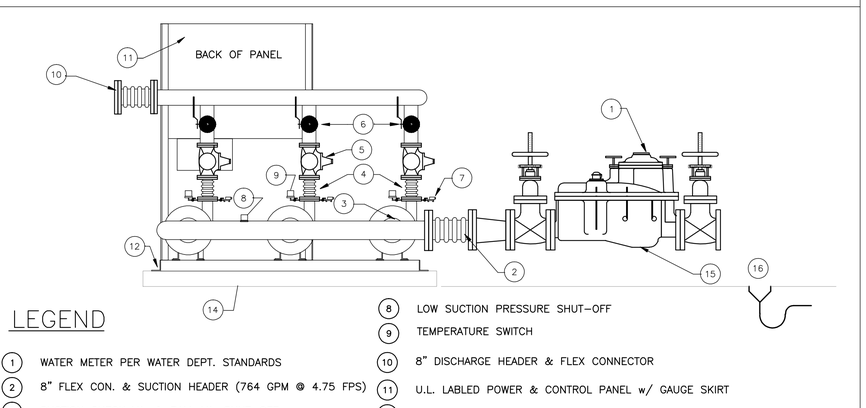

LEGEND

1. WATER METER PER WATER DEPT. STANDARDS
2. 8" FLEX CON. & SUCTION HEADER (764 GPM @ 4.75 FPS)
3. SUCTION CHECK VA. & BALL VA. SHUT-OFF
4. DISCHARGE FLEX CONNECTOR
5. SOLEINOID ENABLED PRESSURE REDUCING CHECK VALVE
6. BUTTERFLY VALVE SHUT-OFF
7. PURGE VALVE
8. LOW SUCTION PRESSURE SHUT-OFF
9. TEMPERATURE SWITCH
10. 8" DISCHARGE HEADER & FLEX CONNECTOR
11. U.L. LABLED POWER & CONTROL PANEL w/ GAUGE SKIRT
12. ANGLE IRON BASE
13. ANTI-VIBRATION PADS
14. 4" CONCRETE HOUSEKEEPING PAD
15. SUPPORT WATER METER & BACKFLOW DEVICE PER WATER DEPT. STANDARDS
16. FLOOR DRAIN

2 INCOMING WATER SERVICE AND TRIPLEX DOMESTIC WATER BOOSTER PUMP ARRANGEMENT
NOT TO SCALE

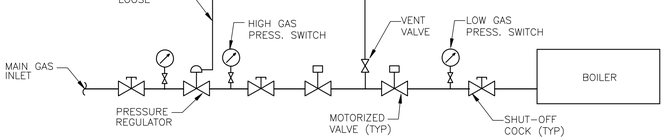

7 GAS TRAIN DIAGRAM
SCALE: NONE

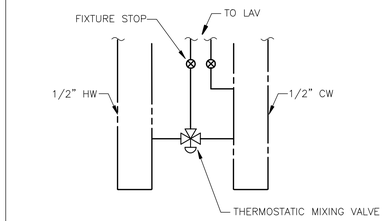

11 THERMOSTATIC MIXING VALVE AT LAV
SCALE: NONE

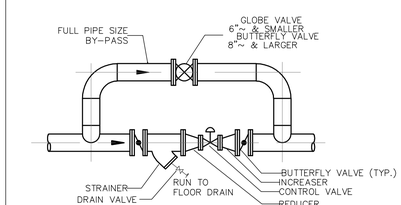

12 TYPICAL BY-PASS CONTROL VALVE
SCALE: NONE (FOR 6" ϕ AND LARGER PIPE ONLY)

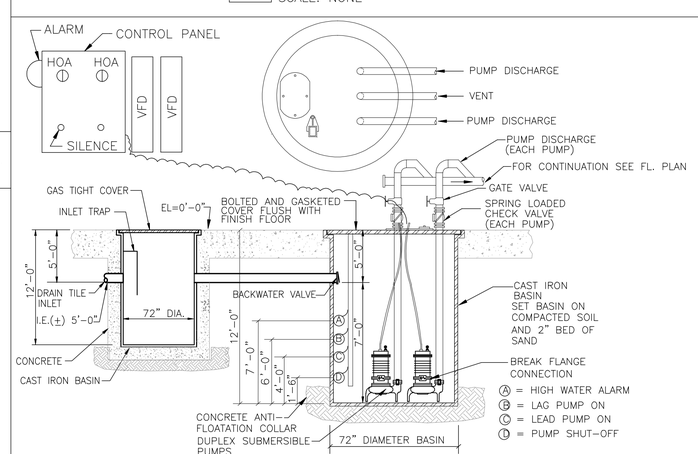

8 DUPLEX SUMP AND SETTLING BASIN
SP 1 / SB 1
SCALE: NONE

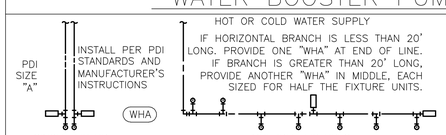

SINGLE FIXTURE

PDI SIZE	PIPE SIZE	FIXTURE UNIT LOAD
A	1/2"	1-11
B	3/4"	12-32
C	1"	33-60
D	1-1/4"	61-113
E	1-1/2"	114-154
F	2"	154-330

MULTIPLE FIXTURES

FIXTURE UNIT TABULATION

FIXTURE	COLD	HOT
VALVE WATER CLOSET	10	--
TANK WATER CLOSET	5	--
URINAL	5	--
LAVATORY/SINK	1.5	1.5
JANITOR'S SINK	3	3
SHOWER/BATHTUB	2	2

DO NOT PROVIDE AIR CHAMBERS. PROVIDE WATER HAMMER ARRESTERS BY SIOUX CHIEF, PRECISION PLUMBING PRODUCTS, WATTS OR APPROVED EQUIVALENT WITH PISTON AND O-RING CONSTRUCTION, HAVING PDI #WH-201, ASSE # 1010 AND ANSI # A112.26.1M CERTIFICATION. INSTALL IN HORIZONTAL OR VERTICAL POSITION, BUT NEVER UPSIDE DOWN. INSTALL IN LINE WITH WATER FLOW DIRECTION IF POSSIBLE. SIZE THE UNITS AS SHOWN ON THE DRAWINGS AND/OR PER THE TABLES SHOWN ABOVE.

3 WATER HAMMER ARRESTERS
SCALE: NONE

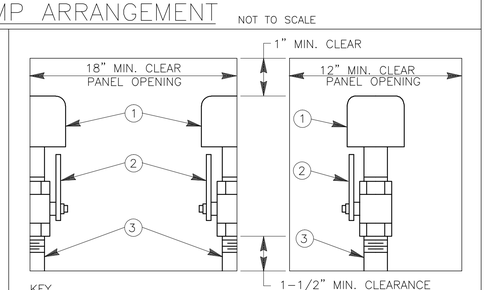

KEY

1. WATER HAMMER ARRESTOR
2. BALL VALVE, SAME NOMINAL SIZE AS PIPE BRANCH IN CHASE. OPENING IN BALL VALVE TO MATCH PIPE I.D.
3. PIPE SAME SIZE AS BRANCH IN CHASE TO WHICH IT IS ATTACHED.

NOTE: PROVIDE REDUCER IF REQUIRED BETWEEN VALVE AND WATER HAMMER ARRESTOR.

4 WATER HAMMER PANEL INSTALLATION
SCALE: NONE (SINGLE AND DOUBLE APPLICATION)

RS&H. IMPROVING YOUR WORLD

Reynolds, Smith and Hills, Inc.
4525 Airport Approach Rd, Ste A
Duluth, Minnesota 55811
218-722-1227 Fax: 218-722-1052
www.rsandh.com

DULUTH AIRPORT AUTHORITY

DULUTH INTERNATIONAL AIRPORT
DULUTH, MN

NEW TERMINAL DESIGN

CONSULTANTS

Interior Architects:
SJA ARCHITECTS
11 E Superior Street Suite 245, Duluth MN 55802
TEL: (218) 724-5576 / FAX: (218) 724-5717

Structural Engineers:
MBJ CONSULTING ENG.
501 Lake Avenue South, Suite 300, Duluth MN 55802
TEL: (218) 723-1039 / FAX: (218) 723-0509

MEP/FP Engineers:
COSENTINI ASSOCIATES INC.
1 South Wacker Drive, 37th Floor, Chicago IL 60606
TEL: (312) 201-7400 / FAX: (312) 201-0591

Baggage Handling Systems Consultants:
BNP ASSOCIATES INC.
101 East Ridge Office Park, Suite 100, Danbury CT 06810
TEL: (203) 792-3000 / FAX: (203) 792-4020

Landscaping Consultants:
APPOLD DESIGN
2432 East First Street, Duluth MN 55812
TEL: (218) 391-0979

SEAL

REVISIONS

NO.	DESCRIPTION	DATE

DATE ISSUED: 04-12-10
REVIEWED BY: XX
DRAWN BY: HV
DESIGNED BY: SA

AEP PROJECT NUMBER
213-1882-091

© 2006 REYNOLDS, SMITH AND HILLS INC.

SHEET TITLE
PLUMBING DETAILS

SHEET NUMBER
P4-02

90% NOT FOR CONSTRUCTION

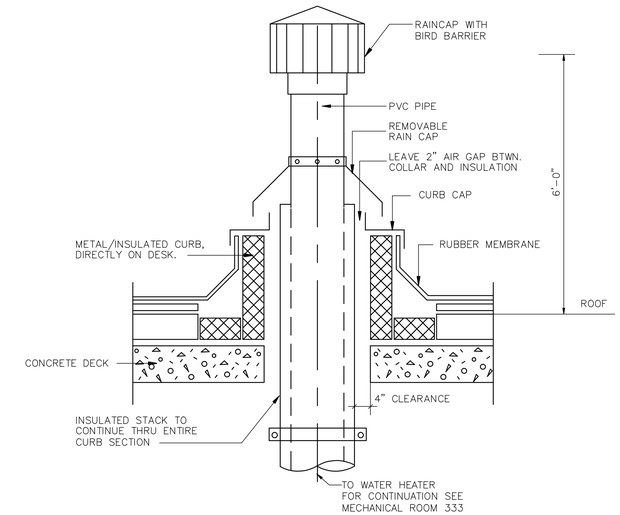

1 FLUE ROOF PENETRATION
SCALE: NONE

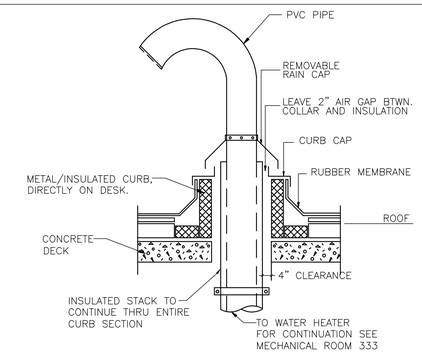

2 AIR INTAKE GOOSENECK
SCALE: NONE

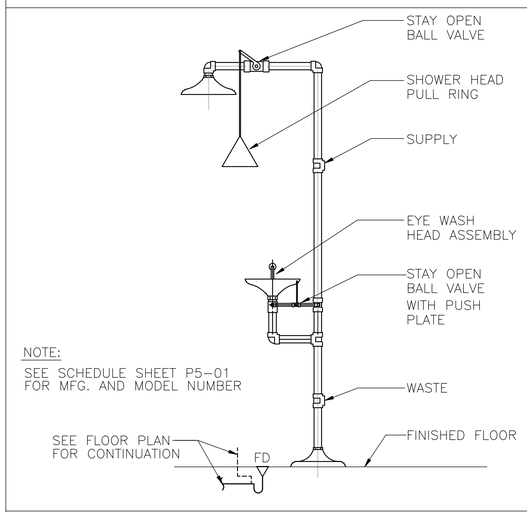

NOTE:
SEE SCHEDULE SHEET P5-01
FOR MFG. AND MODEL NUMBER

3 EMERGENCY SHOWER WITH EYE WASH
SCALE: NONE

RS&H
IMPROVING YOUR WORLD

Reynolds, Smith and Hills, Inc.
4525 Airport Approach Rd, Ste A
Duluth, Minnesota 55811
218-722-1227 Fax: 218-722-1052
www.rsandh.com

DULUTH AIRPORT AUTHORITY

DULUTH
INTERNATIONAL
AIRPORT
DULUTH, MN

NEW TERMINAL
DESIGN

CONSULTANTS

Interior Architects:
SJA ARCHITECTS
11 E Superior Street Suite 340, Duluth MN 55802
TEL: (218) 724-5576 / FAX: (218) 724-5717

Structural Engineers:
MBJ CONSULTING ENG.
501 Lake Avenue South, Suite 300, Duluth MN 55802
TEL: (218) 723-1658 / FAX: (218) 723-5599

MEP/FP Engineers:
COSENTINI ASSOCIATES INC.
1 South Wacker Drive, 37th Floor, Chicago IL 60606
TEL: (312) 201-7400 / FAX: (312) 201-6001

Baggage Handling Systems Consultants:
BNP ASSOCIATES INC.
101 East Ridge Office Park, Suite 100, Danbury CT 06810
TEL: (203) 793-5500 / FAX: (203) 793-4920

Landscaping Consultants:
APPOLD DESIGN
2432 East First Street, Duluth MN 55812
TEL: (218) 591-5979

SEAL

REVISIONS

NO.	DESCRIPTION	DATE

DATE ISSUED: 04-12-10
REVIEWED BY: XX
DRAWN BY: HV
DESIGNED BY: SA

AEP PROJECT NUMBER
213-1882-091

© 2006 REYNOLDS, SMITH AND HILLS INC.

SHEET TITLE
PLUMBING DETAILS

SHEET NUMBER
P4-03

90% NOT FOR CONSTRUCTION

Drawing: I:\5528.00 Duluth Airport\5.0 CADD\(5.0) Plumbing\Dwgs\5528_P403.dwg Plotted on: 4/9/2010 1:27 PM Plotted by: Volene, Henry

VALVE SCHEDULE / 32° F TO 150° F SERVICE TEMPERATURE

BALL VALVES – 4 INCH AND SMALLER FULL PORT 600# WOG

MANUFACTURER	THREADED	SOLDER		
CONBRACO (APOLLO)	70–100	70–200		
CRANE	9302	9322		
GRINNELL	3700	3700 SJ		
NIBCO	T–585–70	S–585–70		
RED–WHITE	5044 F.	5094 F.		
STOCKHAM	S216–BR–RT	S216–BR–RS		
WATTS	B–6000	B–6001		

"X" MEANS NOT AVAILABLE

BUTTERFLY VALVES – 4 INCH AND LARGER 175 PSI MAX.

MANUFACTURER	WAFER	LUG		
KEYSTONE	AR–1	AR–2		
BRAY	30–119	31–119		
CENTERLINE	200–W	200–L		

FOR COPPER GRV'D. CONNECTIONS, USE VICTAULIC SERIES 608 300 PSI MAX.

SWING CHECK VALVES – 2 INCH AND SMALLER

	CLASS 125	CLASS 125	CLASS 150	CLASS 150
MANUFACTURER	THREADED	SOLDER	THREADED	SOLDER
CRANE	37	1342	137	X
GRINNELL	3300	3300SJ	3320	X
HAMMOND	IB940	IB941	IB946	IB945
MILWAUKEE	509	1509	510	1510
NIBCO	T–413	S–413	T–433	S–433
STOCKHAM	B–319	B–309	B–321	X

FOR GROOVED CONNECTIONS, USE VICTAULIC SERIES 712

SWING CHECK VALVES – 2 1/2 INCH AND LARGER – FLANGED

MANUFACTURER	CLASS 125	CLASS 250		
CRANE	373			
GRINNELL	X			
HAMMOND	IR1124			
MILWAUKEE	F–2974			
NIBCO	F–918–B			
STOCKHAM	G–931			

FOR GROOVED CONNECTIONS, USE VICTAULIC SERIES 712

"X" MEANS NOT AVAILABLE

PLUMBING MATERIALS SPECIFICATION

TYPE of SERVICE

TYPE of MATERIAL	SIZE	SUSPEN. DRAINS & STACKS	SUSPEN. VENTS & STACKS	SUSPEN. STORM DRAINS & DOWMSPOUTS	SUSPEN. DOM. WTR. DISTRIB. TO 150#	SUSPEN. DOM. WTR. DISTRIB. 151#-400#	BURIED DOM. WTR. SERVICE	BURIED FIRE PROT. SERVICE	BURIED BLDG. SEWER	BURIED BLDG. DRAINS	BURIED STORM
CAST IRON SOIL PIPE & FITTINGS ASTM A74	2"–15" dia.										
CAULKED JOINTS w\ LEAD & OAKUM FS QQ–C–40		*	*	*					*	*	
PUSH–ON JOINTS w\ ASTM C564 GASKETS									*	*	
GALV. STL. PIPE ASTM A53 & DRAINAGE FITTINGS											
CUT–GROOVED COUPLINGS & FTTGS.	2"–24" dia.			*							
THREADED CAST IRON ASTM B16.12	1 1/2"–2 1/2" dia.	*	*								
COPPER PIPE HARD DRAWN TYPE M ASTM B88 w\											
CAST ASTM B16.23 or WROT ASTM B16.29											
COPPER SOLDER JOINT DRAINAGE FITTINGS	1 1/2"–2 1/2" dia.	*	*								
COPPER PIPE HARD DRAWN TYPE K ASTM B88	1 1/2"–2 1/2" dia.						*				
VITRIFIED CLAY PIPE & FITTINGS ASTM C700 w\											
COMPRESSION GASKET JOINTS ASTM C425	6"–24" dia.								*		
REINFORCED CONCRETE PIPE ASTM C76 w\											
RUBBER GASKET JOINTS ASTM C443	14"–54" dia.								*		*
DUCTILE IRON PIPE & FITTINGS AWWA C151											
CEMENT LINED AWWA A21.4, w\ PUSH–ON or											
MECHANICAL JOINTS AWWA A21.11	3"–24" dia.						*	*			
GALV. STL. PIPE ASTM A53 Sch.40 w\ GALV. 125#											
THREADED MALLEABLE IRON FITTINGS ANSI B16.3	to 2 1/2" dia.				*						
FLANGED CAST IRON FITTINGS ANSI B16.1	3"–12" dia.				*						
COPPER PIPE HARD DRAWN TYPE L ASTM B88 w\											
CAST ASTM B16.18 or WROT ASTM B16.22											
COPPER SOLDER JOINT PRESSURE FITTINGS	to 2 1/2" dia.				*						
ROLL–GROOVED COPPER FITTINGS & COPPER											
PLATED DUCTILE IRON COUPLINGS	3"–6" dia.				*						
T–DRILL EXTRUDED CONNECTIONS	1 1/2"–6" dia.				*						
GALV. STL. PIPE ASTM A53 Sch.40 w\ GALV. 250#											
THREADED MALLEABLE IRON FITTINGS ANSI B16.3	to 2 1/2" dia.					*					
FLANGED CAST IRON FITTINGS ANSI B16.1	3"–12" dia.					*					
PREFORATED VITRIFIED CLAY PIPE & FTTGS ASTM C700	4"–8" dia.										
POLYVINYL CHLORIDE (PVC) PLASTIC PIPE (TYPE DWV PIPE).		*	*	*						*	*
ASTM F 891	6"–12" dia.										
POLYVINYL CHLORIDE (PVC) PLASTIC FITTINGS		*	*	*						*	*
ASTM D 2464											

FIXTURE ROUGH-IN PIPE SIZES

FIXTURE	TAG	RISER AND AIR CHAMBER FOR FIXTURE		FIXTURE NIPPLE (VALVE INLET)		CODE REQUIREMENTS		MOUNTING HEIGHT (FLR. TO RIM)	ELEC.	MFG.	MODEL	REMARKS
		HW	CW	HW	CW	WASTE	VENT					
WATER CLOSET	WC–1	–	1 1/4"	–	1"	4"	2"	15"	120V	SEE SPEC.		
WATER CLOSET (ADA)	WC–2	–	1 1/4"	–	1"	4"	2"	17"	120V	SEE SPEC.		
WATER CLOSET/LAV	W/L	3/4"	1 1/4"	1/2"	1/2"	4"	2"	–	–	WILLOUGHBY	ECF–3696	ADA COMPLIANT – LAV /TOILET , FULL MODEL NUMBER ECF–3696 (L OR R) ON–BPH–PM2–PBH–OV–TW4–LF–RTH FLUSH CONTROL CUTOFF SWITCH LOCATE OUTSIDE ROOM.
LAVATORY	LAV–1	3/4"	3/4"	1/2"	1/2"	2"	1 1/2"	SEE ARCH.	–	SEE SPEC.		
URINAL	UR–1	–	1"	–	3/4"	2"	1 1/2"	24"	120V	SEE SPEC.		
URINAL (ADA)	UR–2	–	1"	–	3/4"	2"	1 1/2"	17"	120V	SEE SPEC.		
SINK	SK–1	3/4"	3/4"	1/2"	1/2"	2"	1 1/2"	–	–	SEE SPEC.		
SINK	SK–2	3/4"	3/4"	1/2"	1/2"	2"	1 1/2"	–	–	SEE SPEC.		
DRINKING FOUNTAIN	DF–1	–	3/4"	–	1/2"	2"	1 1/2"	–	–	SEE SPEC.		
JANITOR'S MOP BASIN	JMB	3/4"	3/4"	1/2"	1/2"	3"	2"	–	–	SEE SPEC.		
HOSE BIBB	HB	–	1"	–	3/4"	–	–	–	–	–	–	WITH CODE REQ'D. BACKFLOW PREVENTER
TRAP PRIMER	TP	–	1/2"	–	–	–	–	–	–	PRECISION PLUMBING PRODUCTS	MODEL P1 or P2	RUN 1/2" COLD WATER TO EACH FLOOR DRAINS INCLUDE DISTRIBUTION UNITS AS REQUIRED.
								–				
EMER. SHOWER / EYEWASH (ADA)	ES/EW	2"	1 1/2"	1 1/4"	1 1/4"	2"	2"	–	–			
SHOWER	SH	3/4"	3/4"	1/2"	1/2"	2"	1 1/2"	–	–	SEE SPEC.		

DOMESTIC WATER HEATER SCHEDULE

HEATER TAG	SERVICE	LOCATION	STORAGE CAPACITY	ELECTRICAL						GAS BTU/HR INPUT	RECOVERY RATE AT 100 DEG. F TEMP. RISE	STORED WATER TEMP. F.	BASIS OF DESIGN	MODEL NO.	COMMONS
				PUMP	ELEMENT KW	BURNER	BLOWER	VOLTS	PHASE						
WH–1	DOMESTIC WATER HEATING	3RD FLOOR MECHANICAL ROOM	100	–						250,000	294	140	LAARS	LUHE–100T–250E–3N(A)	99.1% EFFICIENT
WH–2			100	–						250,000	294			LUHE–100T–250E–3N(A)	

PUMP SCHEDULE

	SERVICE	LOCATION	SYSTEM GPM	TOTAL DYNAMIC HEAD	PUMP GPM	MOTOR DATA HP	VOLTS	PH	RPM	MANUFACTURER & MODEL	REMARKS
HP–1	HOUSE PUMP	GROUND FLOOR	145	92	73	5	460	3	3450	SYNCROFLO 55TA354V–VFD	TRIPLEX BOOSTER SYSTEM U.L./C–U.L. SYSTEM FLOW 145 GPM BOOST PRESSURE 40 PSIG INCLUDING A SUCTION PRESSURE OF 38 PSIG MIN.
				92	73	5	460	3	3450		
				92	37	3	460	3	3450		
RP–1	120° HOT WATER RECIRCULATING PUMP	THIRD FLOOR	6	31		1/6	115		3300	B&G PL–36	IN–LINE
PP–1,2&3	ELEVATOR PIT PUMP	GROUND FLOOR	10	15	–	1/4	120	1		ZOELLER PUMP CO, STANCOR	SUBMERSIBLE, SUMP PUMP LOCATED IN 18"X18"X24" W/ OIL MINDER ON EMERGENCY POWER
SP–1	DUPLEX SUBMERSIBLE SUMP PUMP	GROUND FLOOR	800	30	800	10	460	3	1750	FTI FTI150DLF67.54	DUPLEX SUBMERSIBLE SUMP PUMP DUPLEX VARIABLE–SPEED CONTROL SYSTEM TO RESPOND TO THE FLOW CHANGES, PROVIDE SUBMERSIBLE TRANSMITTER, EMERGENCY POWER

(OTHER ACCEPTABLE MANUFACTURES ARE BELL AND GOSSETT,METROPOLITAN AND CANARIIS)

MIXING VALVE SCHEDULE

TAG	LOCATION	SERVICE	IN HOT	IN COLD	MIXED OUT	GPM MIN.	GPM MAX	COMMENTS	BASIS OF DESIGN
TMV	SINK	LAV	120	40	110	0.1	0.5	PARRALEL PIPED	SYMMONS 5–110–CK

GREASE INTERCEPTOR SCHEDULE

TAG NO.	SERVICE	LOCATION	MANUFACTURER & MODEL #	REMARKS
GI 1	GREASE INTERCEPTOR	GROUND FLOOR	J.R. SMITH MODEL # 8050 50 GPM FLOW, 100 LB. GREASE CAPACITY	

DRAIN SCHEDULE

TAG	SERVICE	DESCRIPTION	JR SMITH NO.	ACCEPTABLE MANUFACTURES
FD–1	FINISHED AREA FLOOR DRAIN	NICKLE BRONZE VANDAL PROOF TOP	2010	WADE OR ZURN
FD–2	MECHANICAL ROOMS	FLOOR SINK W/ 1/2" GRATE	2270	WADE OR ZURN
FD–3		RECESSED GRATE		
RD–1	ROOF DRAIN	CAST IRON WITH FLASHING CLAMP & CAST IRON DOME	1015–ARC	WADE OR ZURN
RD–2	ROOF DRAIN	CAST IRON WITH FLASHING CLAMP, CAST IRON DOME & INTERNAL DAM	–	WADE OR ZURN
RD–3	ROOF DRAIN			
TD	TRENCH DRAIN		TRENCH 9818 GRATE 9812–CI	POLYDRAIN
FS		FLOOR SINK		

RS&H
IMPROVING YOUR WORLD

Reynolds, Smith and Hills, Inc.
4525 Airport Approach Rd, Ste A
Duluth, Minnesota 55811
218-722-1227 Fax: 218-722-1052
www.rsandh.com

DULUTH AIRPORT AUTHORITY

DULUTH INTERNATIONAL AIRPORT
DULUTH, MN

NEW TERMINAL DESIGN

CONSULTANTS

Interior Architects:
SJA ARCHITECTS
11 E Superior Street Suite 340, Duluth MN 55802
TEL: (218) 724-8578 / FAX: (218) 724-8717

Structural Engineers:
MBJ CONSULTING ENG.
501 Lake Avenue South, Suite 300, Duluth MN 55802
TEL: (218) 722-1056 / FAX: (218) 722-8308

ME/P/FP Engineers:
COSENTINI ASSOCIATES INC.
1 South Wacker Drive, 37th Floor, Chicago IL 60606
TEL: (312) 201-7400 / FAX: (312) 201-0031

Baggage Handling Systems Consultants:
BNP ASSOCIATES INC.
101 East Ridge Office Park, Suite 103, Danbury CT 06810
TEL: (203) 792-3000 / FAX: (203) 792-4800

Landscaping Consultants:
APPOLD DESIGN
2432 East First Street, Duluth MN 55812
TEL: (218) 591-5079

SEAL

REVISIONS

NO.	DESCRIPTION	DATE

DATE ISSUED: 04-12-10
REVIEWED BY: XX
DRAWN BY: HV
DESIGNED BY: SA

AEP PROJECT NUMBER
213-1882-091

© 2006 REYNOLDS, SMITH AND HILLS INC.

SHEET TITLE
PLUMBING SCHEDULES

SHEET NUMBER
P5–01

90% NOT FOR CONSTRUCTION

DRAWING SYMBOLS

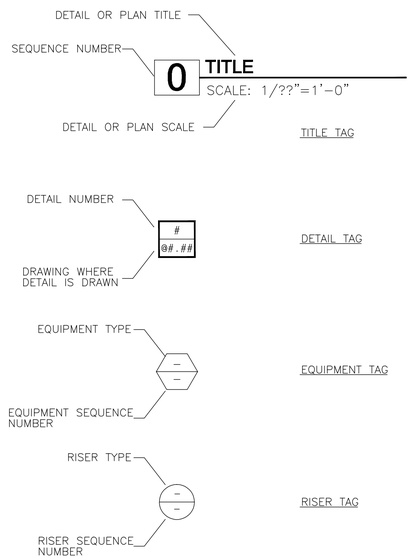

FIRE PROTECTION SYMBOLS

SYMBOL	DESCRIPTION
●	PENDENT TYPE SPRINKLER HEAD
○	UPRIGHT SPRINKLER HEAD
⊙	CONCEALED PENDENT TYPE SPRINKLER HEAD
▼	SIDEWALL HEAD
⊠	VANDAL–RESISTANT PENDENT SPRINKLER HEAD
—F—	FIRE PROTECTION MAIN PIPING
	CHECK VALVE W/ 1/2" BALL DRIP
	FLOOR CONTROL VALVE W/ VSD
	WATER FLOW SWITCH
	SIAMESE CONNECTION
	FIRE DEPT. HOSE VALVE (FDV)
	FIRE DEPT. TEST HEADER
—SP—	WET SPRINKLER
—DP—	DRY SPRINKLER

NOTE: NOT ALL SYMBOLS MAY BE USED.

FIRE PROTECTION ABBREVIATIONS

ABBREVIATIONS	DESCRIPTION
ASZ	AUTOMATIC SPRINKLER ZONE
CSP	COMBINED FIRE STANDPIPE/SPINKLER RISER
FSP	FIRE STANDPIPE
ITC	INSPECTION TEST CONNECTION
FDV	FIRE DEPT. HOSE VALVE
FE	FIRE EXTINGUISHER
FVC/FE	FIRE VALVE CABINET WITH FIRE EXTINGUISHER
FDC	FIRE DEPT. CONNECTION (SIAMESE)
FP	FIRE PUMP
JP	JOCKEY PUMP
P.I.V.	POST INDICATING VALVES
TS	TAMPER SWITCH
RPZ	REDUCED PRESSURE ZONE BACKFLOW PREVENTER (PROVIDED BY PLUMBING CONTRACTOR)
VSD	VALVE SUPERVISORY DEVICE (TAMPER SWITCH)
WFS	WATER FLOW SWITCH
W.I.V.	WALL INDICATING VALVES

NOTE: NOT ALL SYMBOLS MAY BE USED.

FM 200 LEGEND

SYMBOL	DESCRIPTION
	CAUTION/ADVISORY SIGNAGE
P P/S	PULL STATION
A	ABORT SWITCH
◆	IONIZATION/PHOTOELECTRIC DETECTOR
FM/CP	ADDRESSABLE CONTROL PANEL
N	FM–200 NOZZLE

DULUTH INTERNATIONAL AIRPORT

5528 FIRE PROTECTION DRAWING LIST

Sheet No.	Filename (proj.#5528	DRAWING TITLE	11/05/09 ISSUED FOR CD	01/29/10 REVISED FOR REVIEW	03/26/10 REVISED FOR REVIEW	04/05/10 90% CD				
			DATE							
F0–01	5528F001	FIRE PROT. SYMBOLS, ABBREVIATIONS AND DRAWING INDEX	●	●	●	●				
F1–10	5528F110	ENLARGED FIRST FLOOR FIRE PROTECTION PLAN AREA A	●	●	●	●				
F1–11	5528F111	ENLARGED FIRST FLOOR FIRE PROTECTION PLAN AREA B	●	●	●	●				
F1–12	5528F112	ENLARGED SECOND FLOOR FIRE PROTECTION PLAN AREA A	●	●	●	●				
F1–13	5528F113	ENLARGED SECOND FLOOR FIRE PROTECTION PLAN AREA B	●	●	●	●				
F1–14	5528F114	ENLARGED THIRD FLOOR FIRE PROTECTION PLAN AREA A	●	●	●	●				
F1–15	5528F115	ENLARGED THIRD FLOOR FIRE PROTECTION PLAN AREA B	●	●	●	●				
F4–01	5528F401	FIRE PROTECTION DETAILS	●	●	●	●				
F5–01	5528F501	FIRE PROTECTION SCHEDULES AND RISER DIAGRAM	●	●	●	●				

GENERAL NOTES:

1. COORDINATE DESIGN AND INSTALLATION WITH ARCHITECT AND ALL OTHER TRADES
2. OBTAIN AND PAY FOR ALL REQUIRED PERMITS
3. AUTOMATIC SPRINKLERS SHALL BE ARRANGED SYMETRICALLY IN ALL REQUIRED SPACES AND AS APPROVED BY THE ARCHITECT.

3. FIRE PROTECTION CONTRACTOR SHALL CONDUCT A SEASONAL WATER FLOW TEST IN CONJUNCTION WITH THE LOCAL AUTHORITIES. THE FLOW TEST RESULTS SHALL BE USED FOR PERFORMING THE HYDRAULIC CALCULATIONS.

4. THE FIRE PROTECTION CONTRACTOR SHALL SIZE THE SPRINKLER PIPING HYDRAULICALLY SUCH THAT EACH SPRINKLER HEAD OUTLET LOCATED THROUGHOUT IS CALCULATED TO FEED TWO SPRINKLER HEADS.

RS&H.
IMPROVING YOUR WORLD

Reynolds, Smith and Hills, Inc.
4525 Airport Approach Rd, Ste A
Duluth, Minnesota 55811
218-722-1227 Fax: 218-722-1052
www.rsandh.com

DULUTH AIRPORT AUTHORITY

DULUTH INTERNATIONAL AIRPORT
DULUTH, MN

NEW TERMINAL DESIGN

CONSULTANTS

Interior Architects:
SJA ARCHITECTS
11 E Superior Street Suite 245, Duluth MN 55802
TEL: (218) 724-5576 / FAX: (218) 724-5717

Structural Engineers:
MBJ CONSULTING ENG.
501 Lake Avenue South, Suite 200, Duluth MN 55802
TEL: (218) 723-1020 / FAX: (218) 723-0589

MEP/FP Engineers:
COSENTINI ASSOCIATES INC.
1 South Wacker Drive, 37th Floor, Chicago IL 60603
TEL: (312) 201-7400 / FAX: (312) 201-0201

Baggage Handling Systems Consultants:
BNP ASSOCIATES INC.
101 East Ridge Office Park, Suite 103, Danbury CT 06810
TEL: (203) 792-0000 / FAX: (203) 792-0020

Landscaping Consultants:
APPOLD DESIGN
3432 East First Street, Duluth MN 55812
TEL: (218) 801-0070

SEAL

REVISIONS

NO.	DESCRIPTION	DATE

DATE ISSUED: 04-12-10
REVIEWED BY: XXX
DRAWN BY: HV
DESIGNED BY: SA

AEP PROJECT NUMBER
213-1882-091

© 2006 REYNOLDS, SMITH AND HILLS INC.

SHEET TITLE

FIRE PROTECTION SYMBOL LIST, ABBREVIATIONS AND DRAWING INDEX

SHEET NUMBER

F0-01

90% NOT FOR CONSTRUCTION

SPECIFICATION FOR FM-200 TOTAL FLOODING FIRE SUPPRESSION SYSTEM

I. SCOPE

THIS SPECIFICATION OUTLINES THE REQUIREMENTS FOR AN FM-200 TOTAL FLOODING FIRE SUPPRESSION SYSTEM WITH AUTOMATIC DETECTION AND CONTROL, FOR THE COPMUTER ROOM AND COMMUNICATION ROOMS. THE WORK DESCRIBED IN THIS SPECIFICATION INCLUDES ALL ENGINEERING, LABOR, MATERIALS, EQUIPMENT AND SERVICES NECESSARY, AND REQUIRED, TO COMPLETE AND TEST THE SUPPRESSION SYSTEM.

II. APPLICABLE STANDARDS AND PUBLICATIONS

THE DESIGN, EQUIPMENT, INSTALLATION, TESTING AND MAINTENANCE OF THE FM-200 SUPPRESSION SYSTEM SHALL BE IN ACCORDANCE WITH THE APPLICABLE REQUIREMENTS SET FORTH IN THE LATEST EDITION OF THE FOLLOWING CODES ND STANDARDS:

1. NFPA NO. 2001 – CLEAN AGENT FIRE EXTINGUISHING AGENTS
2. NFPA NO. 12A – HALON 1301 FIRE EXTINGUISHING SYSTEMS
3. NFPA NO. 70 – NATIONAL ELECTRICAL CODE
4. NFPA NO. 72 – STANDARD FOR PROTECTIVE SIGNALING
5. NFPA NO. 75 – ELECTRONIC COMPUTER SYSTEMS
6. FACTORY MUTUAL APPROVAL GUIDE
7. U.L. LISTINGS
8. REQUIREMENTS OF THE AUTHORITY HAVING JURISDICTION (AHJ)

THE STANDARDS LISTED, AS WELL AS ALL OTHER APPLICABLE CODES AND STANDARDS, SHALL BE USED AS "MINIMUM" DESIGN STANDARDS. ALSO TO BE CONSIDERED ARE THE REQUIREMENTS OF THE "AUTHORITY HAVING JURISDICTION" AND GOOD ENGINEERING PRACTICES.

III. REQUIREMENTS:

THE FM-200 SUPPRESSION SYSTEM INSTALLATION SHALL BE MADE IN ACCORDANCE WITH THE DRAWINGS, SPECIFICATIONS AND APPLICABLE STANDARDS. SHOULD A CONFLICT OCCUR BETWEEN THE DRAWINGS AND SPECIFICATIONS, THE SPECIFICATIONS SHALL PREVAIL.

IV. WORK BY OTHERS:

THE WORK LISTED BELOW SHALL BE PROVIDED BY OTHERS OR UNDER OTHER SECTIONS OF THIS SPECIFICATIONS:

1. 120 VAC POWER SUPPLY TO THE FM-200 CONTROL PANEL.
2. INTERLOCK WIRING AND CONDUIT FOR SHUTDOWN OF HVAC, DAMPERS AND/OR ELECTRIC POWER SUPPLIES, RELAYS AND SHUNT TRIP BREAKERS.
3. CONNECTION TO LOCAL AND REMOTE FIRE ALARM SYSTEMS AND LISTED CENTRAL ALARM STATION.
4. REINFORCING, BRACING ETC. OF DUCTWORK, CEILING, WALLS, DOOR ETC. TO WITH STAND DISCHARGE PRESSURES.

V. QUALITY ASSURANCE:

A. MANUFACTURER:

1. THE MANUFACTURER OF THE FM-200 SUPPRESSION SYSTEM HARDWARE AND DETECTION COMPONENTS SHALL HAVE A MINIMUM OF 10 YEARS EXPERIENCE IN THE DESIGN AND MANUFACTURE OF SIMILAR TYPES OF SUPPRESSION SYSTEMS AND WHO CAN REFER TO SIMILAR INSTALLATIONS PROVIDING SATISFACTORY SERVICE.
2. THE NAME OF THE MANUFACTURER, PART NUMBERS AND SERIAL NUMBERS SHALL APPEAR ON ALL MAJOR COMPONENTS.
3. ALL DEVICES, COMPONENTS AND EQUIPMENT SHALL BE THE PRODUCTS OF THE SAME MANUFACTURER.
4. ALL DEVICES, COMPONENTS AND EQUIPMENT SHALL BE NEW AND STANDARD PRODUCTS OF THE MANUFACTURERS LATEST DESIGN, SUITABLE TO PERFORM THE FUNCTIONS INTENDED.
5. LOCKS FOR ALL CABINETS SHALL BE KEYED ALIKE.
6. ALL DEVICES AND EQUIPMENT SHALL BE U.L. LISTED AND/OR FM APPROVED.
7. PERFORMANCE, QUALITY AND FEATURES OF THE FM-200 SUPPRESSION SYSTEM HARDWARE AND DETECTION COMPONENTS SHALL BE EQUAL TO:

   FIKE PROTECTION SYSTEMS
   704 SOUTH 10TH STREET
   BLUE SPRINGS, MO 64015
   (816) 229-3405
   (816) 229-4615 – FAX

B. INSTALLER:

1. THE INSTALLING CONTRACTOR SHALL BE TRAINED BY THE MANUFACTURER TO DESIGN, INSTALL, TEST AND MAINTAIN FM-200 FIRE SUPPRESSION SYSTEMS.
2. THE INSTALLING CONTRACTOR SHALL EMPLOY A NICET CERTIFIED SPECIAL HAZARD DESIGNER, LEVEL 2 OR ABOVE, WHO WILL BE RESPONSIBLE FOR THIS PROJECT.
3. THE INSTALLING CONTRACTOR SHALL BE AN EXPERIENCED FIRM REGULARLY ENGAGED IN THE INSTALLATION OF AUTOMATIC FM-200, OR SIMILAR, FIRE SUPPRESSION SYSTEMS IN STRICT ACCORDANCE WITH NFPA STANDARDS.
4. THE INSTALLING CONTRACTOR MUST HAVE A MINIMUM OF FIVE (5) YEARS EXPERIENCE IN THE DESIGN, INSTALLATION AND TESTING OF FM-200, OR SIMILAR, FIRE SUPPRESSION SYSTEMS. A LIST OF SYSTEMS OF A SIMILAR NATURE AND SCOPE SHALL BE PROVIDED ON REQUEST.
5. THE INSTALLING CONTRACTOR SHALL SHOW EVIDENCE THAT HIS COMPANY CARRIES A MINIMUM $2,000,000.00 LIABILITY AND COMPLETED OPERATIONS INSURANCE POLICY. THESE LIMITS SHALL SUPERSEDE LIMITS REQUIRED IN THE GENERAL CONDITIONS OF THE SPECIFICTIONS.
6. THE INSTALLING CONTRACTOR SHALL BE AN AUTHORIZED STOCKING DISTRIBUTOR OF THE FM-200 SYSTEM MANUFACTURER SO THAT IMMEDIATE REPLACEMENT PARTS ARE AVAILABLE FROM INVENTORY.
7. THE INSTALLING CONTRACTOR SHALL SHOW PROOF OF EMERGENCY SERVICE AVAILABLE ON A TWENTY-FOUR HOUR, SEVEN-DAYS A WEEK BASIS; SERVICE PERSONNEL SHALL BE AVAILABLE FOR EMERGENCY SERVICE RESPONSE AT ALL TIMES.
8. THE INSTALLING CONTRACTOR CAPABILITY FOR PERFORMANCE, QUALITY AND FEATURES SHALL BE EQUAL TO:

   RELIABLE FIRE EQUIPMENT COMPANY
   12845 S. CICERO AVENUE
   ALSIP, IL 60658
   (708) 597-4600
   (708) 389-1159 – FAX

C. SUBMITTALS

1. THE INSTALLING CONTRACTOR SHALL SUBMIT THE FOLLOWING DESIGN INFORMATION AND DRAWINGS FOR APPROVAL PRIOR TO STARTING WORK ON THIS PROJECT.
   A. FIELD INSTALLATION LAYOUT DRAWINGS HAVING A SCALE OF NOT LESS THAN 1/8" = 1'-0" DETAILING THE LOCATION OF ALL AGENT STORAGE TANKS, PIPE RUNS INCLUDING PIPE SIZES AND LENGTHS, CONTROL PANEL, DETECTORS, MANUAL PULL STATIONS, ABORT STATIONS, AUDIBLE AND VISUAL ALARMS, ETC.
   B. AUXILIARY DETAILS AND INFORMATION SUCH AS MAINTENANCE PANELS, DOOR HOLDERS, SPECIAL SEALING REQUIREMENTS AND EQUIPMENT SHUTDOWNS.
   C. SEPARATE LAYOUTS, OR DRAWINGS, SHALL BE PROVIDED FOR EACH LEVEL, (I.E.; ROOM SUB-FLOOR, AND ABOVE CEILING; AND FOR MECHANICAL AND ELECTRICAL WORK.).
   D. A SEPARATE LAYOUT, OR DRAWING, SHALL SHOW ISOMETRIC DETAILS OF AGENT STORAGE CONTAINERS, MOUNTING DETAILS, AND PROPOSED PIPE RUNS AND SIZES.
   E. ELECTRICAL LAYOUT DRAWINGS SHALL SHOW THE LOCATION OF ALL DEVICES AND INCLUDE POINT-TO-POINT CONDUIT RUNS.
   F. PROVIDE AN INTERNAL CONTROL PANEL WIRING DIAGRAM WHICH SHALL INCLUDE POWER SUPPLY REQUIREMENTS AND FIELD WIRING TERMINATION POINTS.
   G. COMPLETE HYDRAULIC FLOW CALCULATIONS, FROM A U.L. LISTED COMPUTER PROGRAM, SHALL BE PROVIDED FOR ALL ENGINEERED FM-200 SYSTEMS. CALCULATIONS SHEET(S) MUST INCLUDE THE MANUFACTURERS NAME AND U.L. LISTING FOR VERIFICATION. THE INDIVIDUAL SECTIONS OF PIPE AND EACH FITTING TO BE USED, AS SHOWN ON THE ISOMETRICS, MUST BE IDENTIFIED AND INCLUDED IN THE CALCULATION. TOTAL AGENT DISCHARGE TIME MUST BE SHOWN AND DETAILED BY ZONE.
   H. PRE-ENGINEERED SYSTEMS SHALL PROVIDE CALCULATIONS OF THE AGENT PIPING DISTRIBUTION SYSTEM AND TAKE INTO ACCOUNT THE FRICTION LOSS OF EACH COMPONENT OF THE PIPING NETWORK. THESE CALCULATIONS SHALL PROVIDE A TOTAL PRESSURE DROP (TPD) NOT TO EXCEED 100 AND SHALL COMPLY WITH THE MANUFACTURER'S U.L. LISTING.
   I. PROVIDE CALCULATIONS FOR THE BATTERY STAND-BY POWER SUPPLY TAKING INTO CONSIDERATION THE POWER REQUIREMENTS OF ALL ALARMS, INITIATING DEVICES AND AUXILIARY COMPONENTS UNDER FULL LOAD CONDITIONS.
   J. A COMPLETE SEQUENCE OF OPERATION SHALL BE SUBMITTED DETAILING ALL ALARM DEVICES, SHUTDOWN FUNCTIONS, REMOTE SIGNALING DAMPER OPERATION, TIME DELAY AND AGENT DISCHARGE FOR EACH ZONE OR SYSTEM.
2. SUBMIT DRAWINGS, CALCULATIONS AND SYSTEM COMPONENT DATA SHEETS FOR APPROVAL TO THE CHICAGO FIRE PREVENTION BUREAU, OWNERS INSURANCE UNDERWRITER AND ALL OTHER AUTHORITIES HAVING JURISDICTION BEFORE STARTING INSTALLATION. SUBMIT APPROVED PLANS TO THE ARCHITECT/ENGINEER FOR RECORD.

VI. SYSTEM DESCRIPTION AND OPERATION

A. THE SYSTEM SHALL BE A TOTAL FLOODING FM-200 EXTINGUISHING SYSTEM.

B. THE SYSTEM SHALL PROVIDE AN FM-200 MINIMUM DESIGN CONCENTRATION OF 7%, BY VOLUME, IN ALL AREAS AND/OR PROTECTED SPACES AT THE ANTICIPATED 70° TEMPERATURE WITHIN THE PROTECTED AREA. ALTITUDE ATMOSPHERIC CORRECTION FACTOR SHALL APPLY, IF APPLICABLE.

C. THE SYSTEM SHALL BE COMPLETE IN ALL WAYS. IT SHALL INCLUDE ALL MECHANICAL AND ELECTRICAL INSTALLATION, ALL DETECTION AND CONTROL EQUIPMENT, AGENT STORAGE CONTAINERS, FM-200 AGENT, NOZZLES, PIPE AND FITTINGS, MANUAL RELEASE AND ABORT STATIONS, AUDIBLE AND VISUAL ALARM DEVICES, AUXILIARY DEVICES AND CONTROLS, SHUTDOWNS, ALARM INTERFACE, CAUTION/ADVISORY SIGNS, FUNCTIONAL CHECKOUT AND TESTING, TRAINING AND ALL OTHER OPERATIONS NECESSARY FOR A FUNCTIONAL, U.L. LISTED AND/OR FM APPROVED, FM-200 SUPPRESSION SYSTEM.

D. THE GENERAL CONTRACTOR SHALL BE RESPONSIBLE FOR SEALING AND SECURING THE PROTECTED SPACES AGAINST AGENT LOSS AND/OR LEAKAGE DURING THE 10 MINUTE "HOLD" PERIOD.

E. THE SYSTEM SHALL BE ACTUATED BY A COMBINATION OF IONIZATION AND/OR PHOTOELECTRIC DETECTORS INSTALLED AT A MAXIMUM SPACING OF 250 SQ. FT. PER DETECTOR, IN BOTH THE ROOM AND SUB-FLOOR PROTECTED SPACES. IF THE AIR FLOW EXCEEDS ONE AIR CHANGE PER MINUTE, PHOTOELECTRIC DETECTORS ONLY SHALL BE INSTALLED AT A SPACING NOT TO EXCEED 125 SQ. FT. PER DETECTOR (REF. NFPA NO. 72 – 1993 EDITION).

F. DETECTORS SHALL BE WIRED IN "VERIFIED DETECTION" METHOD OF OPERATION, USING EITHER THE CLASS "A" OR CLASS "B" WIRING ARRANGEMENT. ANY SINGLE ACTIVATED DETECTOR WILL BE PROCESSED BY THE CONTROL PANEL AND BE INDICATED AS AN "ALARM" CONDITION. THIS SHALL CAUSE THE ALARM AUDIBLE CIRCUIT AND THE RED ALARM L.E.D. ON THE COVER TO ACTIVATE. THE ACTIVATION OF ANY SECOND DETECTOR, REGARDLESS OF ITS LOCATION, SHALL CAUSE THE SYSTEM TO ENTER THE PRE-DISCHARGE AUDIBLE CIRCUIT AND START THE PROGRAMMED, SOLID STATE, TIME DELAY CIRCUIT. NO OTHER DETECTION/WIRING ARRANGEMENT WILL BE ACCEPTABLE.

G. AUTOMATIC OPERATION OF EACH PROTECTED AREA SHALL BE AS FOLLOWS:

1. ACTUATION OF ONE (1) DETECTOR, WITHIN THE SYSTEM, SHALL:
   A. ILLUMINATE THE "ALARM" LAMP ON THE CONTROL PANEL FACE.
   B. ENERGIZE AN ALARM BELL AND VISUAL INDICATOR.
   C. TRANSFER 10 AMP RATED AUXILIARY CONTACTS WHICH CAN PERFORM AUXILIARY SYSTEM FUNCTIONS SUCH AS:
      (1) OPERATE DOOR HOLDER/CLOSURES ON ACCESS DOORS.
      (2) TRANSMIT A SIGNAL TO A FIRE ALARM SYSTEM.
2. ACTUATION OF A 2ND DETECTOR, WITHIN THE SYSTEM, SHALL:
   A. ILLUMINATE THE "PRE-DISCHARGE" LAMP ON THE CONTROL PANEL FACE.
   B. ENERGIZE AN ALARM HORN OR HORN/STROBE DEVICE.
   C. SHUT DOWN THE HVAC SYSTEM AND/OR CLOSE DAMPERS.
   D. START TIME-DELAY SEQUENCE (NOT TO EXCEED 30 SECONDS).
   E. SYSTEM ABORT SEQUENCE IS ENABLED AT THIS TIME.
3. AFTER COMPLETION OF THE TIME-DELAY SEQUENCE, THE FM-200 SYSTEM SHALL DISCHARGE AND THE FOLLOWING SHALL OCCUR:
   A. ILLUMINATE A "SYSTEM FIRED" LAMP ON THE CONTROL PANEL FACE.
   B. SHUTDOWN OF ALL POWER TO HIGH-VOLTAGE EQUIPMENT.
   C. ENERGIZE A VISUAL INDICATOR OUTSIDE THE HAZARD IN WHICH THE DISCHARGE OCCURRED.
   D. ENERGIZE A "SYSTEM FIRED" AUDIBLE DEVICE.
   E. RELEASE PREACTION VALVE TO CHARGE SPRINKLER SYSTEM.
4. THE SYSTEM SHALL BE CAPABLE OF BEING ACTUATED BY MANUAL DISCHARGE DEVICES LOCATED AT EACH HAZARD EXIT. OPERATION OF A MANUAL DEVICE SHALL DUPLICATE THE "VERIFIED DETECTION" SEQUENCE DESCRIPTION ABOVE EXCEPT THAT THE TIME DELAY AND ABORT FUNCTIONS SHALL BE BYPASSED. THE MANUAL DISCHARGE STATION SHALL BE OF THE ELECTRICAL ACTUATION TYPE AND SHALL BE SUPERVISED AT THE MAIN CONTROL PANEL.

VII. MATERIALS AND EQUIPMENT:

A. GENERAL REQUIREMENTS:

THE FM-200 SYSTEM MATERIALS AND EQUIPMENT SHALL BE STANDARD PRODUCTS OR THE MANUFACTURER'S LATEST DESIGN AND SUITABLE TO PERFORM THE FUNCTIONS INTENDED.

WHEN ONE OR MORE PIECES OF EQUIPMENT MUST PERFORM THE SAME FUNCTIONS, THEY SHALL BE DUPLICATES PRODUCED BY ONE MANUFACTURER.

B. FM-200 STORAGE AND DISTRIBUTION:

EACH SYSTEM SHALL HAVE ITS OWN SUPPLY OF FM-200 AGENT.

1. THE SYSTEM DESIGN CAN BE MODULAR, CENTRAL STORAGE, OR A COMBINATION OF BOTH DESIGN CRITERIA.
2. SYSTEMS SHALL BE DESIGNED IN ACCORDANCE WITH THE MANUFACTURER'S GUIDELINES.
3. EACH SUPPLY SHALL BE LOCATED WITHIN THE HAZARD AREA, OR AS NEAR AS POSSIBLE, TO REDUCE THE AMOUNT OF PIPE AND FITTINGS REQUIRED TO INSTALL THE SYSTEM.
4. THE FM-200 AGENT SHALL BE STORED IN AGENT STORAGE CONTAINERS. CONTAINERS SHALL BE SUPER-PRESSURIZED, WITH DRY NITROGEN, TO AN OPERATING PRESSURE OF 360 PSIG AT 70°F. CONTAINERS SHALL BE OF HIGH-STRENGTH ALLOY STEEL CONSTRUCTION THAT COMPLIES WITH THE DEPARTMENT OF TRANSPORTATION REGULATION FOR REFILLABLE PRESSURE VESSELS AND CONFORM TO NFPA 2001.
5. CONTAINERS SHALL BE ACTUATED BY PARALLEL WIRED INITIATORS THROUGH AN AGENT RELEASE MODULE (ARM) LOCATED AT EACH AGENT CONTAINER.
6. EACH CONTAINER SHALL HAVE A PRESSURE GAUGE AND LOW PRESSURE SWITCH TO PROVIDE VISUAL AND ELECTRICAL SUPERVISION OF THE CONTAINER PRESSURE. THE LOW PRESSURE SWITCH SHALL BE WIRED TO THE CONTROL PANEL TO PROVIDE AN AUDIBLE AND VISUAL "TROUBLE" ALARM IN THE EVENT THE CONTAINER PRESSURE DROPS BELOW 272 PSI. THE PRESSURE GAUGE SHALL BE COLOR CODED TO PROVIDE AN EASY VISUAL INDICATION OF CONTAINER PRESSURE.
7. EACH CONTAINER SHALL HAVE A PRESSURE RELIEF PROVISION THAT AUTOMATICALLY OPERATES WHEN THE INTERNAL TEMPERATURE EXCEEDS 150°F.
8. EACH CONTAINER SHALL BE FITTED WITH A LIQUID LEVEL DEVICE. IT SHALL BE POSSIBLE TO DETERMINE THE CONTAINER AGENT QUANTITY WITHOUT REMOVING THE CONTAINER FROM ITS MOUNTING BRACKET, DISCONNECTING THE DISTRIBUTION PIPING, OR REMOVING THE FM-200 SYSTEM FROM SERVICE.
9. PRE-ENGINEERED OR ENGINEERED DISCHARGE NOZZLES SHALL BE PROVIDED, WITHIN THE MANUFACTURERS GUIDELINES, TO DISTRIBUTE THE FM-200 THROUGHOUT THE PROTECTED SPACES. THE NOZZLES SHALL BE DESIGNED TO PROVIDE PROPER AGENT QUANTITY AND DISTRIBUTION.
   A. NOZZLES SHALL BE AVAILABLE IN NPT PIPE SIZES 1/4" THROUGH 2". EACH SIZE SHALL BE AVAILABLE IN 180 AND 360 DEGREE DISTRIBUTION PATTERNS.
   B. DEFLECTOR PLATES SHALL BE USED WITH THE NOZZLES WHEN SENSITIVE CEILING TILES MUST BE PROTECTED.
10. DISTRIBUTION PIPING, AND FITTINGS, SHALL BE INSTALLED IN ACCORDANCE WITH THE MANUFACTURER'S REQUIREMENTS, NFPA 2001 AND APPROVED PIPING STANDARDS AND GUIDELINES. ALL DISTRIBUTION PIPING SHALL BE INSTALLED BY QUALIFIED INDIVIDUALS USING GOOD, ACCEPTED PRACTICES AND QUALITY WORKMANSHIP PROCEDURES. ALL PIPING SHALL BE ADEQUATELY SUPPORTED AND ANCHORED AT ALL DIRECTIONAL CHANGES AND NOZZLE LOCATIONS.
   A. ALL PIPING SHALL BE REAMED, BLOWN CLEAR AND SWABBED WITH SUITABLE SOLVENTS TO REMOVE BURRS, MILL VARNISH AND CUTTING OILS BEFORE ASSEMBLY.
   B. ALL MALE PIPE THREADS SHALL BE SEALED WITH TEFLON TAPE PIPE SEALANT APPLIED IN ACCORDANCE WITH THE MANUFACTURER'S REQUIREMENTS AND GOOD PIPING PRACTICES.

C. CONTROL PANEL:

THE CONTROL PANEL SHALL BE WITH INTEGRAL BATTERY STANDBY POWER SUPPLY. THE CONTROL PANEL SHALL BE A LISTED "RELEASING DEVICE" AND WILL PERFORM ALL THE FUNCTIONS NECESSARY TO OPERATE THE FM-200 SYSTEM DETECTION, ACTUATION AND AUXILIARY SYSTEM FUNCTIONS AS OUTLINED.

1. THE CONTROL PANEL SHALL BE HOUSED IN A WALL MOUNTED ENCLOSURE SUITABLE FOR PROTECTING ELECTRICAL CIRCUITS. IT SHALL BE AN 18 GAUGE METAL CABINET WITH A HINGED, LOCKED DOOR, PAINTED WITH AN ATTRACTIVE FINISH.
2. THE CONTROL UNIT SHALL OPERATE ON 120/240 VAC, 50/60 HZ.
3. THE CONTROL PANEL SHALL PROVIDE AN AUDIBLE AND VISUAL "TROUBLE" SIGNAL IN THE EVENT A LOSS OF AC, RECTIFIED, OR BATTERY POWER.
4. THE CONTROL PANEL SHALL INCLUDE A SELF-CONTAINED, 24 VDC EMERGENCY POWER SUPPLY INCLUDING A BATTERY CHARGER AND (2) GEL-CELL RECHARGEABLE BATTERIES WITH A MINIMUM RATING OF 6.0 AMP HOURS.
5. THE CONTROL PANEL SHALL INCLUDE THE FOLLOWING ADDITIONAL FEATURES:
   A. 3 AUDIBLE CIRCUITS – EACH RATED @ 24 VDC, .025 A.
   B. 3 AUDIBLE SILENCE SWITCHES.
   C. 7 SETS OF 10 AMP AUXILIARY CONTACTS.
   D. 10 DIAGNOSTIC L.E.D.'S FOR EASY TROUBLE-SHOOTING.
   E. SOLID-STATE, FIELD PROGRAMMABLE TIME DELAY – 0-60 SECONDS.
   F. 4 ABORT OPTIONS INCLUDING THE I.R.I. METHOD.
   G. ALL COMPONENTS, INCLUDING BATTERIES, IN A SINGLE ENCLOSURE.
   H. CONTROL PANEL CAN BE SEMI-FLUSH OR SURFACE MOUNTED.
   I. PROTECTIVE COVERS OVER ALL HIGH VOLTAGE TERMINALS.
   J. CONNECTIONS TO POWER A REMOTE ANNUNCIATOR.
   K. AC INPUT PROTECTED BY A CIRCUIT BREAKER – NOT A FUSE.
   L. CONTAINER DISABLE SWITCH – ISOLATE THE AGENT CONTAINERS SO THAT TESTING CAN BE PERFORMED. OPERATION OF THE SWITCH SHALL CAUSE A TROUBLE SIGNAL.
   M. VERIFIED DETECTION.
   N. PARALLEL WIRED AGENT RELEASE MODULES USING ELECTRICAL INITIATORS.
   O. CLASS "A" WIRING OF DETECTION AND AGENT RELEASE CIRCUITS.
   P. PRE-ACTION SPRINKLER CONTROL VALVE RELEASE CIRCUIT AND "CHARGED" STATUS INDICATOR.

D. DETECTORS:

THE DETECTORS SHALL BE SPACED AND INSTALLED IN ACCORDANCE WITH THE MANUFACTURER'S SPECIFICATIONS AND WITHIN THE GUIDELINES OF NFPA NO. 72 – 1993 EDITION.

1. THE IONIZATION TYPE DETECTOR SHALL BE SOLID STATE CIRCUITRY WITH AN ALARM/POWER STATUS LED ON THE HEAD AND LOW PROFILE DESIGN PROTRUDING NO MORE THAN 2" FROM THE CEILING. THE DETECTOR SHALL HAVE AN OUTER SAMPLE CHAMBER AND INNER BALANCE CHAMBER IONIZED BY A SINGLE AMERICIUM 241 SOURCE. A CHANGE IN THE VOLTAGE RATIO BETWEEN THE CHAMBERS, CAUSED BY INFLUENCE OF VISIBLE OR INVISIBLE PRODUCTS OF COMBUSTION SHALL PROVIDE AN OUTPUT, RECOGNIZABLE TO THE CONTROL PANEL AS AN ALARM SIGNAL. EACH DETECTOR SHALL BE PROTECTED AGAINST RADIO FREQUENCY INTERFERENCE (RFI) AND VOLTAGE TRANSIENTS WHICH MAY BE INDUCED ON THE INSTALLATION WIRING.
2. THE PHOTOELECTRIC TYPE DETECTOR SHALL BE SOLID STATE CIRCUITRY WITH AN ALARM/POWER STATUS LED ON THE HEAD AND BE LOW PROFILE DESIGN, PROTRUDING NO MORE THAN 2" FROM THE CEILING. THE DETECTOR SHALL HAVE AN LED LIGHT SOURCE AND A SILICON PHOTO DIODE RECEIVING ELEMENT. PRESENCE OF SMOKE REFLECTS THE LIGHT SOURCE, CONVERTED INTO AN ELECTRICAL SIGNAL, TO THE RECEIVING ELEMENT COMPARATOR. WHEN TWO CONSECUTIVE SIGNALS EXCEED THE COMPARATORS PRESET LEVEL, WITHIN A SPECIFIED TIME PERIOD, THE TIME DELAY SHALL INITIATE AN OUTPUT RECOGNIZABLE TO THE CONTROL PANEL AS AN ALARM SIGNAL. EACH DETECTOR SHALL BE PROTECTED AGAINST RADIO FREQUENCY INTERFERENCE (RFI) AND VOLTAGE TRANSIENTS WHICH MAY BE INDUCED ON THE INSTALLATION WIRING.

E. MANUAL RELEASE SWITCH:

THE MANUAL RELEASE SWITCH SHALL BE A DUAL ACTION DEVICE WHICH PROVIDES A MEANS OF MANUALLY DISCHARGING THE FM-200 FIRE SUPPRESSION SYSTEM WHEN USED IN CONJUNCTION WITH THE CONTROL PANEL.

1. MANUAL ACTUATION SHALL BYPASS THE TIME DELAY AND ABORT FUNCTIONS, SHALL CAUSE THE SYSTEM TO DISCHARGE AND SHALL CAUSE ALL ALARM AND SHUTDOWN DEVICES TO OPERATE IN THE SAME MANNER AS IF THE SYSTEM HAD OPERATED AUTOMATICALLY.

F. ABORT STATION:

THE ABORT STATION SHALL BE THE "DEAD MAN" TYPE AND SHALL BE LOCATED NEXT TO EACH MANUAL SWITCH.

1. THE ABORT STATION SHALL BE SUPERVISED AND SHALL INDICATE A TROUBLE CONDITION AT THE FM-200 SYSTEM CONTROL PANEL IF DEPRESSED.
2. "LOCKING" OR "KEYED" ABORT STATIONS SHALL NOT BE PERMITTED.
3. THE ABORT STATION SHALL BE PROVIDED WITH AN OPTIONAL DIGITAL COUNTDOWN TIMER.

G. AUDIBLE AND VISUAL ALARMS:

ALARM SIGNAL DEVICES SHALL OPERATE FROM THE FM-200 CONTROL PANEL.

1. THE ALARM BELL SHALL BE POLARIZED FOR FULL SUPERVISION AND U.L. LISTED. IT SHALL CONSUME ONLY .030 AMP AT 24 VDC AND HAVE AN OUTPUT OF 84DB. THE ALARM BELL SHALL BE RUGGEDLY CONSTRUCTED AND PROVIDED WITH A BAKED RED FINISH.
2. THE ALARM HORN SHALL BE POLARIZED FOR FULL SUPERVISION AND U.L. LISTED. IT SHALL CONSUME .035 AMP AT 24 VDC AND HAVE AN OUTPUT OF 90 DBA AT 24 VDC. THE ALARM HORN SHALL BE RUGGEDLY CONSTRUCTED AND PROVIDED WITH A BAKED RED FINISH.
3. THE REMOTE STROBE LIGHT UNIT SHALL BE POLARIZED FOR SUPERVISION AND SHALL RECEIVE ITS 24 VDC POWER FROM THE CONTROL PANEL. IT SHALL BE U.L. LISTED FOR INDOOR APPLICATIONS. TOTAL CURRENT DRAW, PER DEVICE, SHALL BE .033 AMP AT 24 VDC. THE XENON FLASH TUBE SHALL BE SEALED IN A STURDY LEXAN LENS. FM200 DECALS SHALL BE INCLUDED.
4. THE HORN/STROBE SHALL BE SUPERVISED AGAINST FAULTS. THE HORN SHALL BE RATED FOR 90DBA AT 24 VDC. IT SHALL BE U.L. LISTED FOR INDOOR APPLICATIONS. THE STROBE LENS SHALL BE OF WHITE TRANSLUCENT CONSTRUCTION WITH FM-200 DECALS INCLUDED. TOTAL CURRENT DRAW OF THE STROBE HORN SHALL NOT EXCEED .070 AMP AT 24 VDC.

H. CAUTION/ADVISORY SIGNS:

PROVIDE SIGNS AS REQUIRED TO COMPLY WITH NFPA 2001 AND THE RECOMMENDATIONS OF THE FM-200 EQUIPMENT MANUFACTURER.

1. ENTRANCE SIGN: (1) REQUIRED AT EACH ENTRANCE TO A PROTECTED SPACE.
2. MANUAL DISCHARGE SIGN: (1) REQUIRED AT EACH MANUAL DISCHARGE STATION.
3. FLASHING LIGHT SIGN: (1) REQUIRED AT EACH FLASHING LIGHT OVER EACH EXIT FROM A PROTECTED SPACE.

I. SYSTEM AND CONTROL WIRING:

ALL FM-200 SYSTEM WIRING SHALL BE FURNISHED AND INSTALLED BY THE FM-200 SYSTEM CONTRACTOR.

1. ALL WIRING SHALL BE INSTALLED IN ELECTRICAL METALLIC TUBING (EMT) OR CONDUIT.
2. ALL SYSTEM COMPONENTS SHALL BE SECURELY SUPPORTED INDEPENDENT OF THE WIRING. RUNS OF CONDUIT AND WIRING SHALL BE STRAIGHT, NEATLY ARRANGED, PROPERLY SUPPORTED, INSTALLED PARALLEL AND PERPENDICULAR TO WALLS AND PARTITIONS.
3. THE SIZES OF THE CONDUCTORS SHALL BE THOSE SPECIFIED BY THE MANUFACTURER. COLOR CODES SHALL BE USED. ALL WIRES SHALL BE TAGGED AT ALL JUNCTION POINTS AND SHALL BE FREE FROM GROUNDS AND CROSSES BETWEEN CONDUCTORS. FINAL CONNECTIONS BETWEEN EQUIPMENT AND THE SYSTEM WIRING SHALL BE MADE UNDER THE DIRECT SUPERVISION OF A FACTORY TRAINED REPRESENTATIVE.
4. ALL WIRING SHALL BE INSTALLED BY QUALIFIED INDIVIDUALS, IN A NEAT AND WORKMANLIKE MANNER, TO CONFORM TO THE NATIONAL ELECTRICAL CODE, ARTICLE 725, FOR CLASS 1 SIGNAL SYSTEMS, EXCEPT AS OTHERWISE PERMITTED FOR LIMITED ENERGY CIRCUITS, AS DESCRIBED IN NFPA 72 – 1993 EDITION. WIRING INSTALLATION SHALL MEET ALL STATE AND LOCAL CODES.
5. THE COMPLETE SYSTEM ELECTRICAL INSTALLATION, AND ALL AUXILIARY COMPONENTS, SHALL BE GROUNDED IN ACCORDANCE WITH THE NATIONAL ELECTRICAL CODE.

J. SYSTEM INSPECTION AND CHECKOUT:

AFTER THE SYSTEM INSTALLATION HAS BEEN COMPLETED, THE ENTIRE SYSTEM SHALL BE CHECKED OUT, INSPECTED AND FUNCTIONALLY TESTED BY QUALIFIED, TRAINED PERSONNEL, IN ACCORDANCE WITH THE MANUFACTURER'S RECOMMENDED PROCEDURES AND NFPA STANDARDS.

1. ALL CONTAINERS AND DISTRIBUTION PIPING SHALL BE CHECKED FOR PROPER MOUNTING AND INSTALLATION.
2. ALL ELECTRICAL WIRING SHALL BE TESTED FOR PROPER CONNECTION, CONTINUITY AND RESISTANCE TO GROUND.
3. THE COMPLETE SYSTEM SHALL BE FUNCTIONALLY TESTED, IN THE PRESENCE OF THE OWNER OR HIS REPRESENTATIVE, AND ALL FUNCTIONS, INCLUDING SYSTEM AND EQUIPMENT INTERLOCKS, MUST BE OPERATIONAL AT LEAST FIVE (5) DAYS PRIOR TO THE FINAL ACCEPTANCE TESTS.
   A. EACH DETECTOR SHALL BE TESTED IN ACCORDANCE WITH THE MANUFACTURER'S RECOMMENDED PROCEDURES, AND TEST VALUES RECORDED.
   B. ALL SYSTEM AND EQUIPMENT INTERLOCKS, SUCH AS DOOR RELEASE DEVICES, AUDIBLE AND VISUAL DEVICES, EQUIPMENT SHUTDOWNS, LOCAL AND REMOTE ALARMS, ETC., SHALL FUNCTION AS REQUIRED AND DESIGNED.
   C. EACH CONTROL PANEL CIRCUIT SHALL BE TESTED FOR TROUBLE BY INDUCING A TROUBLE CONDITION INTO THE SYSTEM.

K. TRAINING REQUIREMENTS:

PRIOR TO FINAL ACCEPTANCE, THE INSTALLING CONTRACTOR SHALL PROVIDE OPERATIONAL TRAINING TO EACH SHIFT OF THE OWNERS PERSONNEL. EACH TRAINING SESSION SHALL INCLUDE SYSTEM CONTROL PANEL OPERATION, MANUAL AND ABORT FUNCTIONS, TROUBLE PROCEDURES, AUXILIARY FUNCTIONS AND EMERGENCY PROCEDURES.

L. OPERATION AND MAINTENANCE:

PRIOR TO FINAL ACCEPTANCE, THE INSTALLING CONTRACTOR SHALL PROVIDE COMPLETE OPERATION AND MAINTENANCE INSTRUCTION MANUALS, FOUR (4) COPIES FOR EACH SYSTEM, TO THE OWNER. ALL ASPECTS OF SYSTEM OPERATION AND MAINTENANCE SHALL BE DETAILED, INCLUDING PIPING ISOMETRICS, WIRING DIAGRAMS OF ALL CIRCUITS, A WRITTEN DESCRIPTION OF THE SYSTEM DESIGN AND SEQUENCE OF OPERATION, DRAWING ILLUSTRATING CONTROL LOGIC AND EQUIPMENT USED IN THE SYSTEM. CHECKLISTS AND PROCEDURES FOR EMERGENCY SITUATIONS, TROUBLESHOOTING TECHNIQUES AND MAINTENANCE OPERATIONS AND PROCEDURES SHALL BE INCLUDED IN THE MANUAL.

M. AS-BUILT DRAWINGS:

UPON COMPLETION OF EACH SYSTEM, THE INSTALLING CONTRACTOR SHALL PROVIDE FOUR (4) COPIES OF SYSTEM "AS-BUILT" DRAWINGS TO THE OWNER. THE DRAWINGS SHALL SHOW ACTUAL INSTALLATION DETAILS INCLUDING ALL EQUIPMENT LOCATIONS (I.E.: CONTROL PANEL, AGENT CONTAINER, DETECTORS, ALARMS, MANUALS AND ABORTS, ETC.) AS WELL AS PIPING AND CONDUIT ROUTING DETAILS. SHOW ALL ROOM OR FACILITIES MODIFICATIONS, INCLUDING DOOR AND/OR DAMPER INSTALLATIONS COMPLETED. ONE (1) COPY OF REPRODUCIBLE ENGINEERING DRAWINGS SHALL BE PROVIDED REFLECTING ALL ACTUAL INSTALLATION DETAILS.

N. ACCEPTANCE TESTS:

1. AT THE TIME "AS-BUILT" DRAWINGS AND MAINTENANCE/OPERATIONS MANUALS ARE SUBMITTED, THE INSTALLING CONTRACTOR SHALL SUBMIT A "TEST PLAN" DESCRIBING PROCEDURES TO BE USED TO TEST THE FM-200 SYSTEM. THE TEST PLAN SHALL INCLUDE A STEP-BY-STEP DESCRIPTION OF ALL TESTS TO BE PERFORMED AND SHALL INDICATE THE TYPE AND LOCATION OF TEST APPARATUS TO BE EMPLOYED. THE TESTS SHALL DEMONSTRATE THAT THE OPERATIONAL AND INSTALLATION REQUIREMENTS OF THIS SPECIFICATION HAVE BEEN MET. ALL TESTS SHALL BE CONDUCTED IN THE PRESENCE OF THE OWNER AND SHALL NOT BE CONDUCTED UNTIL THE TEST PLAN HAS BEEN APPROVED.
2. THE TEST SHALL DEMONSTRATE THAT THE ENTIRE CONTROL SYSTEM FUNCTIONS AS DESIGNED AND INTENDED. ALL CIRCUITS SHALL BE TESTED: AUTOMATIC ACTUATION, A.R.M., MANUAL ACTUATION, HVAC AND POWER SHUTDOWNS, AUDIBLE AND VISUAL ALARM DEVICES, MANUAL OVERRIDE OF ABORT FUNCTIONS AND AGENT CONTAINER PRESSURE SUPERVISION. SUPERVISION OF ALL PANEL CIRCUITS, INCLUDING AC POWER AND BATTERY POWER SUPPLIES, SHALL BE TESTED AND QUALIFIED.
3. A ROOM PRESSURIZATION TEST SHALL BE CONDUCTED, IN EACH PROTECTED SPACE, TO DETERMINE THE PRESENCE OF OPENINGS WHICH WOULD EFFECT THE FM-200 SYSTEM CONCENTRATION LEVELS. THE TEST(S) SHALL BE CONDUCTED USING THE RETRO-TEC CORP. DOOR FAN SYSTEM, OR EQUIVALENT, WITH INTEGRATED COMPUTER PROGRAM. ALL TESTING SHALL BE IN ACCORDANCE WITH NFPA 2001.
4. IF ROOM PRESSURIZATION TESTING INDICATES THAT OPENINGS EXIST WHICH WOULD RESULT IN LEAKAGE AND/OR LOSS OF THE FM-200 EXTINGUISHING AGENT, THE INSTALLING CONTRACTOR SHALL BE RESPONSIBLE FOR COORDINATING THE PROPER SEALING OF THE PROTECTED SPACE BY THE GENERAL CONTRACTOR OR HIS SUB-CONTRACTOR OR AGENT. THE GENERAL CONTRACTOR SHALL BE RESPONSIBLE FOR ADEQUATELY SEALING ALL PROTECTED SPACE AGAINST AGENT LOSS OR LEAKAGE. THE INSTALLING CONTRACTOR SHALL INSPECT ALL WORK TO ASCERTAIN THAT THE PROTECTED SPACE HAVE BEEN ADEQUATELY AND PROPERLY SEALED. THE FM-200 INSTALLING CONTRACTOR SHALL BE RESPONSIBLE FOR THE SUCCESS OF THE ROOM PRESSURIZATION TESTS. IF THE FIRST ROOM PRESSURIZATION TEST IS NOT SUCCESSFUL, IN ACCORDANCE WITH THESE SPECIFICATIONS, THE INSTALLING CONTRACTOR SHALL DIRECT THE GENERAL CONTRACTOR TO DETERMINE, AND CORRECT, THE CAUSE OF THE TEST FAILURE. THE INSTALLING CONTRACTOR SHALL CONDUCT ADDITIONAL ROOM PRESSURIZATION TESTS, AT NO ADDITIONAL COST TO THE OWNER, UNTIL A SUCCESSFUL TEST IS OBTAINED. COPIES OF SUCCESSFUL TEST RESULTS SHALL BE SUBMITTED TO THE OWNER FOR RECORD.
5. UPON ACCEPTANCE BY THE OWNER, THE COMPLETED FM-200 SYSTEM SHALL BE PLACED IN NORMAL SERVICE.

O. FM-200 SYSTEM INSPECTIONS:

1. UPON ACCEPTANCE BY THE OWNER, THE INSTALLING CONTRACTOR SHALL SUBMIT A PROPOSAL TO PROVIDE TWO (2) INSPECTIONS OF THE FM-200 SYSTEM INSTALLED UNDER THIS CONTRACT, DURING THE ONE-YEAR WARRANTY PERIOD. THE FIRST INSPECTION SHALL BE AT THE SIX MONTH INTERVAL, AND THE SECOND INSPECTION AT THE 12 MONTH INTERVAL, AFTER SYSTEM ACCEPTANCE. INSPECTIONS SHALL BE CONDUCTED IN ACCORDANCE WITH THE MANUFACTURER'S GUIDELINES AND SHALL COMPLY WITH THE RECOMMENDATIONS OF NFPA 2001.
2. DOCUMENTS CERTIFYING SATISFACTORY SYSTEM OPERATIONS SHALL BE SUBMITTED TO THE OWNER UPON COMPLETION OF EACH INSPECTION.

P. WARRANTY:

1. ALL FM-200 SYSTEM COMPONENTS FURNISHED, AND INSTALLED UNDER THIS CONTRACT, SHALL BE GUARANTEED AGAINST DEFECTS IN DESIGN, MATERIALS AND WORKMANSHIP FOR THE FULL WARRANTY PERIOD WHICH IS STANDARD WITH THE MANUFACTURER, BUT IN NO CASE LESS THAN ONE (1) YEAR FROM THE DATE OF SYSTEM ACCEPTANCE.

RS&H
IMPROVING YOUR WORLD

Reynolds, Smith and Hills, Inc.
4525 Airport Approach Rd, Ste A
Duluth, Minnesota 55811
218-722-1227 Fax: 218-722-1052
www.rsandh.com

DULUTH AIRPORT AUTHORITY

DULUTH INTERNATIONAL AIRPORT
DULUTH, MN

NEW TERMINAL DESIGN

CONSULTANTS

Interior Architects:
SJA ARCHITECTS
11 E Superior Street Suite 340, Duluth MN 55802
TEL: (218) 724-8578 / FAX: (218) 724-8717

Structural Engineers:
MBJ CONSULTING ENG.
501 Lake Avenue South, Suite 300, Duluth MN 55802
TEL: (218) 722-1055 / FAX: (218) 722-0308

ME/P/FP Engineers:
COSENTINI ASSOCIATES INC.
1 South Wacker Drive, 37th Floor, Chicago IL 60606
TEL: (312) 201-7400 / FAX: (312) 201-0031

Baggage Handling Systems Consultants:
BNP ASSOCIATES INC.
101 East Ridge Office Park, Suite 103, Danbury CT 06810
TEL: (203) 792-3000 / FAX: (203) 792-4800

Landscaping Consultants:
APPOLD DESIGN
2432 East First Street, Duluth MN 55812
TEL: (218) 591-5079

SEAL

REVISIONS

NO.	DESCRIPTION	DATE

DATE ISSUED: 04-12-10
REVIEWED BY: XXX
DRAWN BY: HV
DESIGNED BY: SA

AEP PROJECT NUMBER
213-1882-091

© 2006 REYNOLDS, SMITH AND HILLS INC.

SHEET TITLE
FIRE PROTECTION FM200

SHEET NUMBER
F0-02

90% NOT FOR CONSTRUCTION

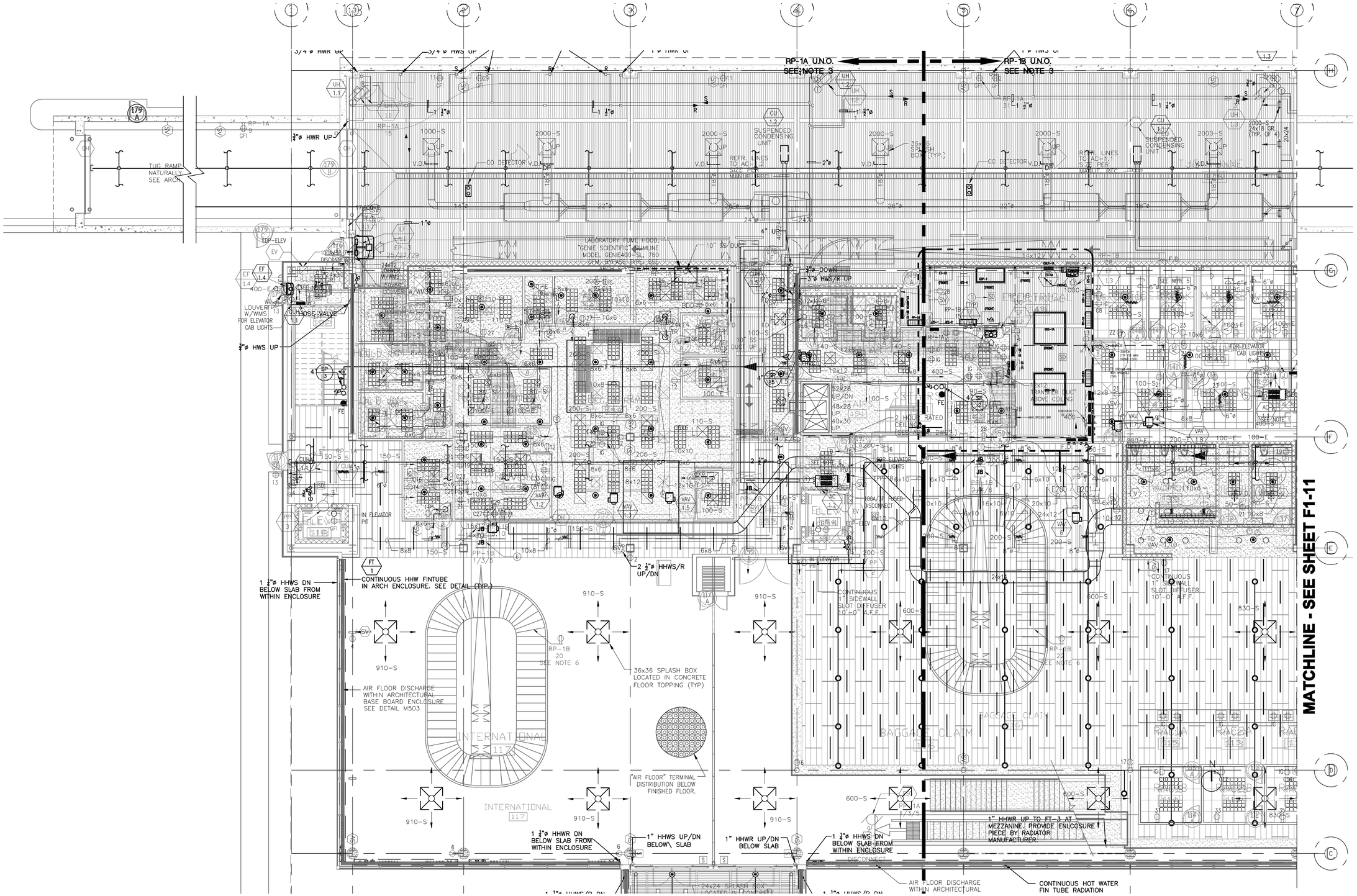

1 ENLARGED FIRST LEVEL FLOOR PLAN - AREA A
1/8" = 1'-0"

8' 4' 0 8' 16'
SCALE: 1/8" = 1'-0"

RS&H.
IMPROVING YOUR WORLD

Reynolds, Smith and Hills, Inc.
4525 Airport Approach Rd, Ste A
Duluth, Minnesota 55811
218-722-1227 Fax: 218-722-1052
www.reandh.com

DULUTH AIRPORT AUTHORITY

DULUTH INTERNATIONAL AIRPORT
DULUTH, MN

NEW TERMINAL DESIGN

CONSULTANTS

Interior Architects:
SJA ARCHITECTS
11 E Superior Street Suite 340, Duluth MN 55802
TEL: (218) 724-5576 / FAX: (218) 724-5717

Structural Engineers:
MBJ CONSULTING ENG.
501 Lake Avenue South, Suite 300, Duluth MN 55802
TEL: (218) 722-1050 / FAX: (218) 722-5930

MEP/FP Engineers:
COSENTINI ASSOCIATES INC.
1 South Wacker Drive, 37th Floor, Chicago IL 60606
TEL: (312) 201-7400 / FAX: (312) 201-6001

Baggage Handling Systems Consultants:
BNP ASSOCIATES INC.
101 East Ridge Office Park, Suite 100, Danbury CT 06810
TEL: (203) 792-5500 / FAX: (203) 792-4500

Landscaping Consultants:
APPOLD DESIGN
2432 East First Street, Duluth MN 55812
TEL: (218) 591-5579

SEAL

REVISIONS

NO.	DESCRIPTION	DATE

DATE ISSUED: 04-12-10
REVIEWED BY: XXX
DRAWN BY: HV
DESIGNED BY: SA

AEP PROJECT NUMBER
213-1882-091

© 2006 REYNOLDS, SMITH AND HILLS INC.

SHEET TITLE
ENLARGED FIRST FLOOR FIRE PROTECTION PLAN AREA A

SHEET NUMBER
F1-10

90% NOT FOR CONSTRUCTION

Drawing: I:\5528.00 Duluth Airport\5.0 CADD\(5.0) Fire Protection\Dwgs\5528_F110.dwg Plotted on: 4/9/2010 1:15 PM Plotted by: Volona, Henry

MATCHLINE - SEE SHEET F1-10

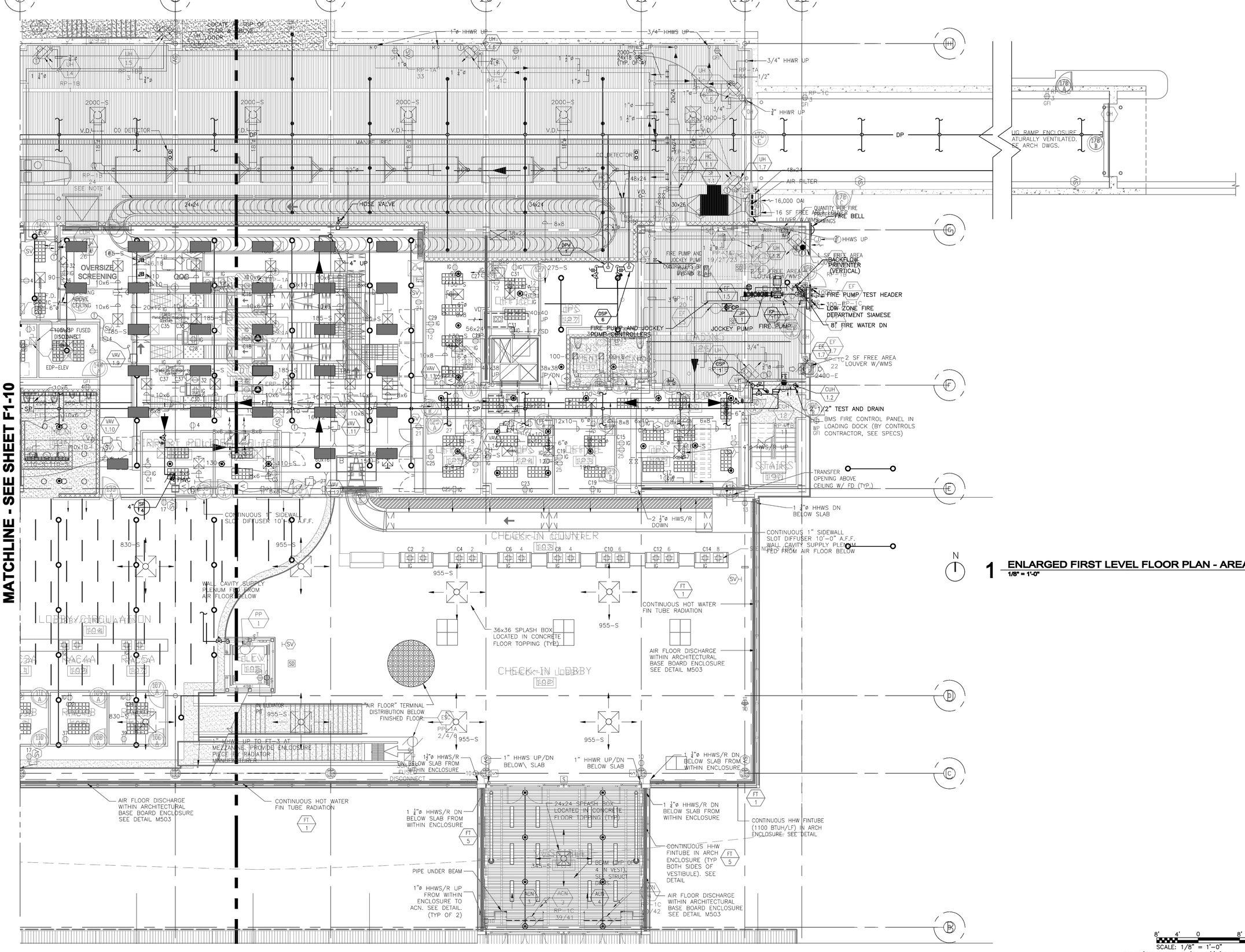

1 ENLARGED FIRST LEVEL FLOOR PLAN - AREA B

1/8" = 1'-0"

SCALE: 1/8" = 1'-0"

Drawing: H:\2038.00 Duluth Airport\8.0 CAD\8.6 Fire Protection\Dwgs\2038_F111.dwg Plotted on: 4/9/2010 1:14 PM Plotted by: Vokes, Henry

RS&H. IMPROVING YOUR WORLD

Reynolds, Smith and Hills, Inc.
4525 Airport Approach Rd, Ste A
Duluth, Minnesota 55811
218-722-1227 Fax: 218-722-1052
www.reandh.com

DULUTH AIRPORT AUTHORITY

DULUTH INTERNATIONAL AIRPORT DULUTH, MN

NEW TERMINAL DESIGN

CONSULTANTS

Interior Architecture:
SJA ARCHITECTS
11 E Superior Street Suite 300, Duluth MN 55802
TEL: (218) 724-5878 / FAX: (218) 724-5717

Structural Engineers:
MSJ CONSULTING ENG.
501 Lake Avenue South, Suite 200, Duluth MN 55802
TEL: (218) 722-1555 / FAX: (218) 722-0550

MEP/FP Engineers:
COSENTINI ASSOCIATES INC.
1 South Wacker Drive, 37th Floor, Chicago IL 60606
TEL: (312) 551-1400 / FAX: (312) 551-0551

Baggage Handling System Consultants:
BHP ASSOCIATES INC.
191 East Ridge Office Park, Suite 100, Danbury CT 06810
TEL: (203) 792-2000 / FAX: (203) 792-2020

Landscaping Consultants:
APPOLD DESIGN
2432 East First Street, Duluth MN 55812
TEL: (218) 591-0070

SEAL

REVISIONS

NO.	DESCRIPTION	DATE

DATE ISSUED: 04-12-10
REVIEWED BY: XXX
DRAWN BY: HV
DESIGNED BY: SA

AEP PROJECT NUMBER
213-1882-091

© 2006 REYNOLDS, SMITH AND HILLS INC.

SHEET TITLE
ENLARGED FIRST FLOOR FIRE PROTECTION PLAN AREA B

SHEET NUMBER
F1-11

90% NOT FOR CONSTRUCTION

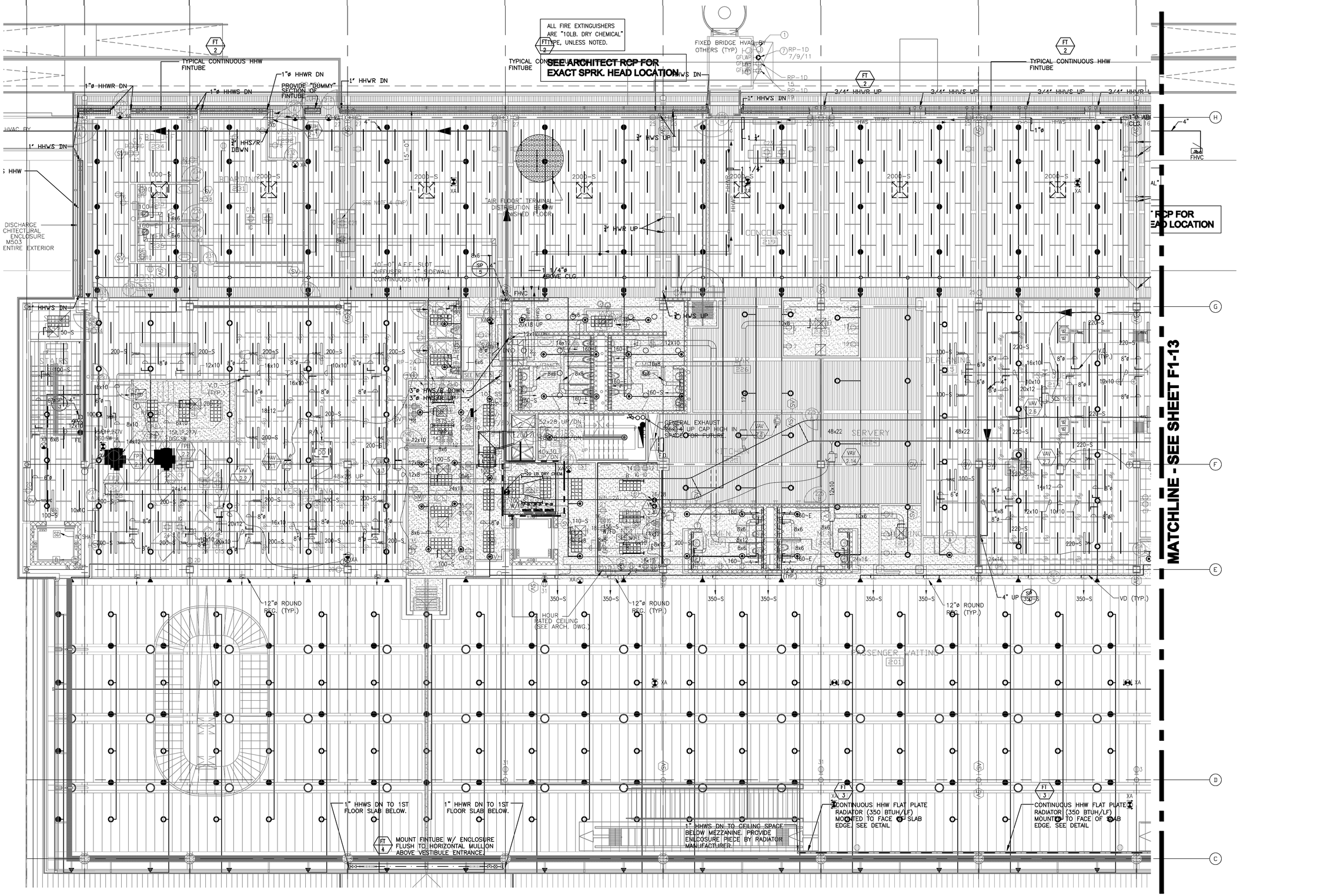

N

1 ENLARGED SECOND LEVEL FLOOR PLAN - AREA A
1/8" = 1'-0"

8' 4' 0 8' 16'
SCALE: 1/8" = 1'-0"

RS&H
IMPROVING YOUR WORLD

Reynolds, Smith and Hills, Inc.
4525 Airport Approach Rd, Ste A
Duluth, Minnesota 55811
218-722-1227 Fax: 218-722-1052
www.rsandh.com

DULUTH AIRPORT AUTHORITY

DULUTH INTERNATIONAL AIRPORT
DULUTH, MN

NEW TERMINAL DESIGN

CONSULTANTS

Interior Architects:
SJA ARCHITECTS
11 E Superior Street Suite 340, Duluth MN 55802
TEL: (218) 724-5576 / FAX: (218) 724-5717

Structural Engineers:
MBJ CONSULTING ENG.
501 Lake Avenue South, Suite 300, Duluth MN 55802
TEL: (218) 723-1555 / FAX: (218) 723-5930

MEP/FP Engineers:
COSENTINI ASSOCIATES INC.
1 South Wacker Drive, 37th Floor, Chicago IL 60606
TEL: (312) 201-7400 / FAX: (312) 201-6001

Baggage Handling Systems Consultants:
BNP ASSOCIATES INC.
101 East Ridge Office Park, Suite 100, Danbury CT 06810
TEL: (203) 792-3500 / FAX: (203) 792-4500

Landscaping Consultants:
APPOLD DESIGN
2432 East First Street, Duluth MN 55812
TEL: (218) 591-5979

SEAL

REVISIONS

NO.	DESCRIPTION	DATE

DATE ISSUED: 04-12-10
REVIEWED BY: XXX
DRAWN BY: HV
DESIGNED BY: SA

AEP PROJECT NUMBER
213-1882-091

© 2006 REYNOLDS, SMITH AND HILLS INC.

SHEET TITLE
ENLARGED SECOND FLOOR FIRE PROTECTION PLAN AREA A

SHEET NUMBER
F1-12

90% NOT FOR CONSTRUCTION

Drawing: I:\5528.00 Duluth Airport\5.0 CADD\(5.0) Fire Protection\Dwgs\5528_F112.dwg Plotted on: 4/9/2010 1:11 PM Plotted by: Volene, Henry

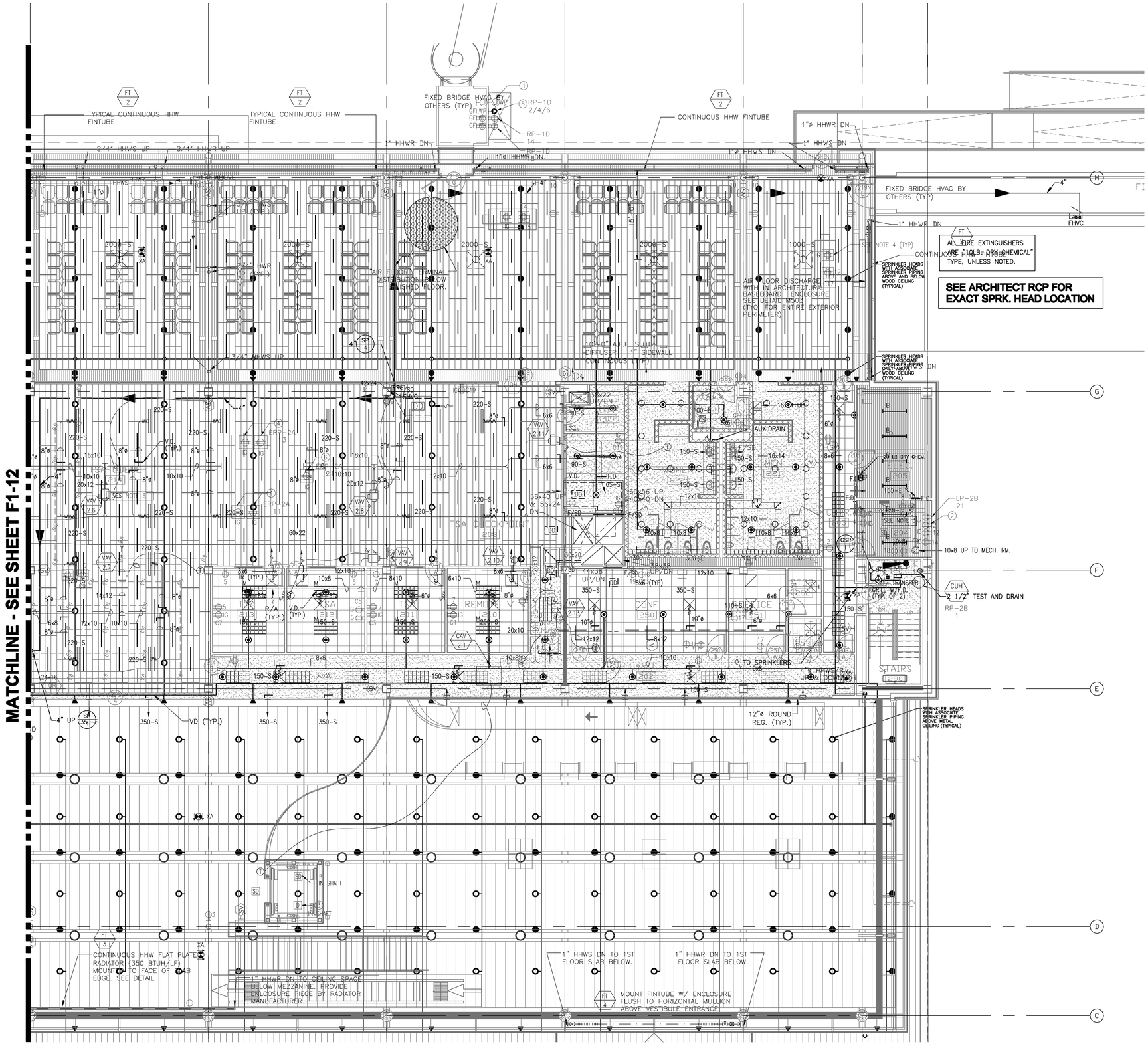

1 ENLARGED SECOND LEVEL FLOOR PLAN - AREA B
1/8" = 1'-0"

SCALE: 1/8" = 1'-0"

RS&H
IMPROVING YOUR WORLD

Reynolds, Smith and Hills, Inc.
4525 Airport Approach Rd, Ste A
Duluth, Minnesota 55811
218-722-1227 Fax: 218-722-1052
www.reandh.com

DULUTH AIRPORT AUTHORITY

DULUTH INTERNATIONAL AIRPORT
DULUTH, MN

NEW TERMINAL DESIGN

CONSULTANTS

Interior Architects:
SJA ARCHITECTS
11 E Superior Street Suite 340, Duluth MN 55802
TEL: (218) 724-5576 / FAX: (218) 724-5717

Structural Engineers:
MBJ CONSULTING ENG.
501 Lake Avenue South, Suite 300, Duluth MN 55802
TEL: (218) 723-1555 / FAX: (218) 723-5509

MEP/FP Engineers:
COSENTINI ASSOCIATES INC.
1 South Wacker Drive, 27th Floor, Chicago IL 60606
TEL: (312) 201-7400 / FAX: (312) 201-6001

Baggage Handling Systems Consultants:
BNP ASSOCIATES INC.
101 East Ridge Office Park, Suite 100, Danbury CT 06810
TEL: (203) 792-5500 / FAX: (203) 792-4500

Landscaping Consultants:
APPOLD DESIGN
2432 East First Street, Duluth MN 55812
TEL: (218) 591-5579

SEAL

REVISIONS

NO.	DESCRIPTION	DATE

DATE ISSUED: 04-12-10
REVIEWED BY: XXX
DRAWN BY: HV
DESIGNED BY: SA

AEP PROJECT NUMBER
213-1882-091

© 2006 REYNOLDS, SMITH AND HILLS INC.

SHEET TITLE
ENLARGED SECOND FLOOR FIRE PROTECTION PLAN AREA B

SHEET NUMBER
F1-13

90% NOT FOR CONSTRUCTION

Drawing: I:\5528.00 Duluth Airport\5.0 CADD\(5.0) Fire Protection\Dwgs\5528_F113.dwg Plotted on: 4/9/2010 1:02 PM Plotted by: Volene, Henry

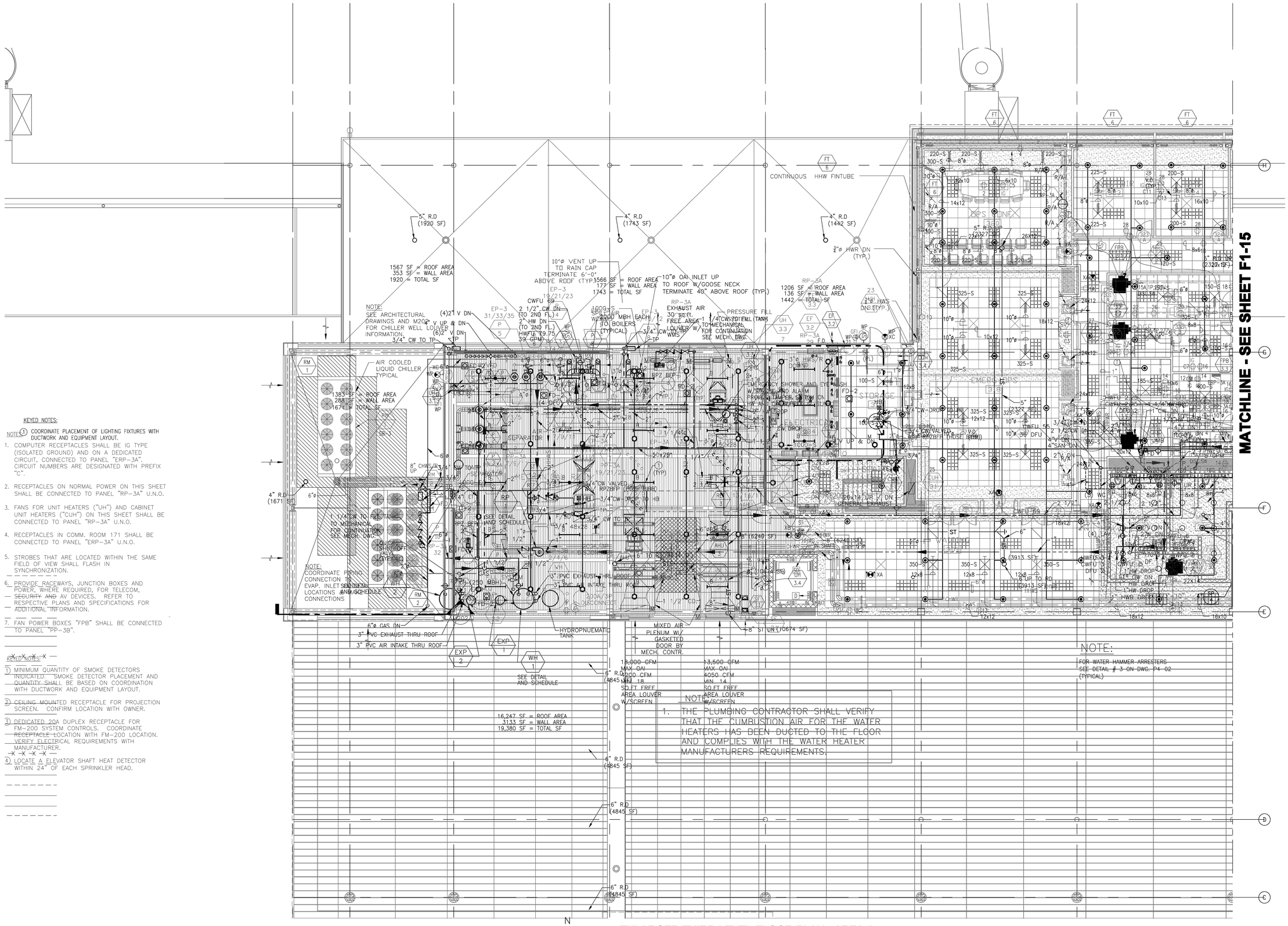

1 ENLARGED THIRD LEVEL FLOOR PLAN - AREA A

1/8" = 1'-0"

SCALE: 1/8" = 1'-0"

KEYED NOTES:

NOTE: (1) COORDINATE PLACEMENT OF LIGHTING FIXTURES WITH DUCTWORK AND EQUIPMENT LAYOUT.

1. COMPUTER RECEPTACLES SHALL BE IG TYPE (ISOLATED GROUND) AND ON A DEDICATED CIRCUIT, CONNECTED TO PANEL "ERP-3A". CIRCUIT NUMBERS ARE DESIGNATED WITH PREFIX "C".
2. RECEPTACLES ON NORMAL POWER ON THIS SHEET SHALL BE CONNECTED TO PANEL "RP-3A" U.N.O.
3. FANS FOR UNIT HEATERS ("UH") AND CABINET UNIT HEATERS ("CUH") ON THIS SHEET SHALL BE CONNECTED TO PANEL "RP-3A" U.N.O.
4. RECEPTACLES IN COMM. ROOM 171 SHALL BE CONNECTED TO PANEL "ERP-3A" U.N.O.
5. STROBES THAT ARE LOCATED WITHIN THE SAME FIELD OF VIEW SHALL FLASH IN SYNCHRONIZATION.
6. PROVIDE RACEWAYS, JUNCTION BOXES AND POWER, WHERE REQUIRED, FOR TELECOM, SECURITY AND AV DEVICES. REFER TO RESPECTIVE PLANS AND SPECIFICATIONS FOR ADDITIONAL INFORMATION.
7. FAN POWER BOXES "FPB" SHALL BE CONNECTED TO PANEL "PP-3B".

KEYED NOTES:

1. MINIMUM QUANTITY OF SMOKE DETECTORS INDICATED. SMOKE DETECTOR PLACEMENT AND QUANTITY SHALL BE BASED ON COORDINATION WITH DUCTWORK AND EQUIPMENT LAYOUT.
2. CEILING MOUNTED RECEPTACLE FOR PROJECTION SCREEN. CONFIRM LOCATION WITH OWNER.
3. DEDICATED 20A DUPLEX RECEPTACLE FOR FM-200 SYSTEM CONTROLS. COORDINATE RECEPTACLE LOCATION WITH FM-200 LOCATION. VERIFY ELECTRICAL REQUIREMENTS WITH MANUFACTURER.
4. LOCATE A ELEVATOR SHAFT HEAT DETECTOR WITHIN 24" OF EACH SPRINKLER HEAD.

RS&H. IMPROVING YOUR WORLD

Reynolds, Smith and Hills, Inc.
4525 Airport Approach Rd, Ste A
Duluth, Minnesota 55811
218-722-1227 Fax: 218-722-1052
www.rsandh.com

DULUTH AIRPORT AUTHORITY

DULUTH INTERNATIONAL AIRPORT DULUTH, MN

NEW TERMINAL DESIGN

CONSULTANTS

Interior Architects:
SJA ARCHITECTS
11 E Superior Street Suite 345, Duluth MN 55802
TEL: (218) 724-8876 / FAX: (218) 724-8717

Structural Engineers:
MBJ CONSULTING ENG.
501 Lake Avenue South, Suite 300, Duluth MN 55802
TEL: (218) 723-1020 / FAX: (218) 723-0989

MEP/FP Engineers:
COSENTINI ASSOCIATES INC.
1 South Wacker Drive, 37th Floor, Chicago IL 60603
TEL: (312) 201-7400 / FAX: (312) 201-0201

Engineer Heating Systems Consultant:
BNP ASSOCIATES INC.
101 East Ridge Office Park, Suite 100, Danbury CT 06810
TEL: (203) 792-2000 / FAX: (203) 792-4020

Landscaping Consultant:
APPOLD DESIGN
2432 East First Street, Duluth MN 55812
TEL: (218) 201-0070

SEAL

REVISIONS

NO.	DESCRIPTION	DATE

DATE ISSUED: 04-12-10
REVIEWED BY: XXX
DRAWN BY: HV
DESIGNED BY: SA

AEP PROJECT NUMBER
213-1882-091

© 2006 REYNOLDS, SMITH AND HILLS INC.

SHEET TITLE
ENLARGED THIRD FLOOR FIRE PROTECTION PLAN AREA A

SHEET NUMBER
F1-14

90% NOT FOR CONSTRUCTION

Drawing: X:\2035.00 Duluth Airport\5.0 CAD\(5.4) Fire Protection\Dwgs\2035_F114.dwg Plotted on: 4/9/2010 12:09 PM Plotted by: Vaiana, Henry

MATCHLINE - SEE SHEET F1-14

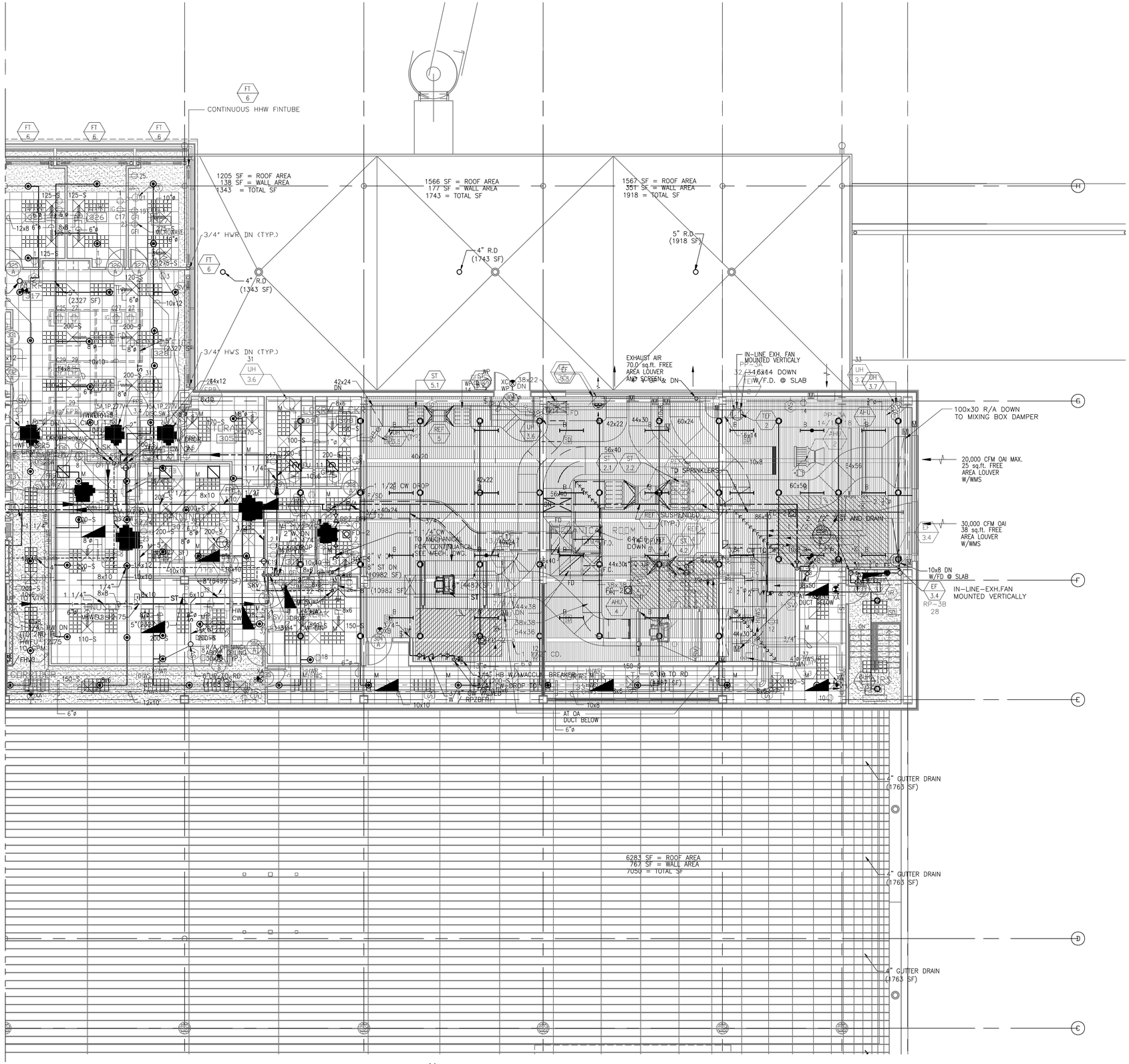

N

1 **ENLARGED THIRD LEVEL FLOOR PLAN - AREA B**

1/8" = 1'-0"

8' 4' 0 8' 16'

SCALE: 1/8" = 1'-0"

Drawing: I:\2020.00 Duluth Airport\A.0 CADD\A.0 Fire Protection\Dwgs\2020_F115.dwg Plotted on: 4/9/2010 12:05 PM Plotted by: Vulcan, Henry

RS&H.
IMPROVING YOUR WORLD

Reynolds, Smith and Hills, Inc.
4525 Airport Approach Rd, Ste A
Duluth, Minnesota 55811
218-722-1227 Fax: 218-722-1052
www.rsandh.com

DULUTH AIRPORT AUTHORITY

DULUTH
INTERNATIONAL
AIRPORT
DULUTH, MN

NEW TERMINAL
DESIGN

CONSULTANTS

Interior Architects:
SJA ARCHITECTS
11 E Superior Street Suite 345, Duluth MN 55802
TEL: (218) 724-5976 / FAX: (218) 724-5717

Structural Engineers:
MBJ CONSULTING ENG.
501 Lake Avenue South, Suite 300, Duluth MN 55802
TEL: (218) 723-1020 / FAX: (218) 723-0589

MEP/FP Engineers:
COSENTINI ASSOCIATES INC.
1 South Wacker Drive, 37th Floor, Chicago IL 60606
TEL: (312) 201-7400 / FAX: (312) 201-0101

Baggage Handling Systems Consultants:
BHP ASSOCIATES INC.
101 East Ridge Office Park, Suite 100, Danbury CT 06810
TEL: (203) 792-2000 / FAX: (203) 792-4020

Landscaping Consultants:
APPOLD DESIGN
3432 East First Street, Duluth MN 55812
TEL: (218) 201-0070

SEAL

REVISIONS

NO.	DESCRIPTION	DATE

DATE ISSUED: 04-12-10
REVIEWED BY: XXX
DRAWN BY: HV
DESIGNED BY: SA

AEP PROJECT NUMBER
213-1882-091

© 2006 REYNOLDS, SMITH AND HILLS INC.

SHEET TITLE

ENLARGED THIRD FLOOR FIRE PROTECTION PLAN AREA A

SHEET NUMBER

F1-15

90% NOT FOR CONSTRUCTION

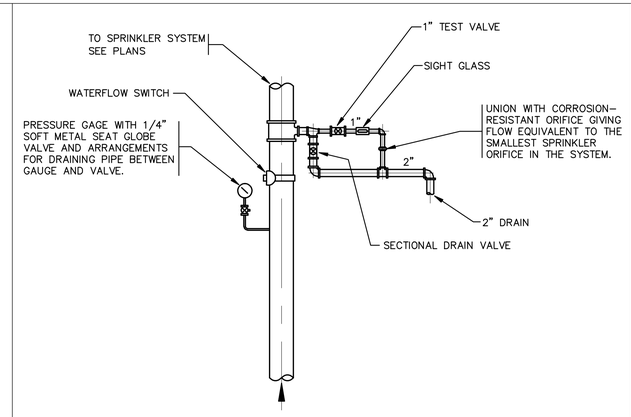

5 INSPECTOR'S TEST CONNECTION DETAIL
SCALE: NONE

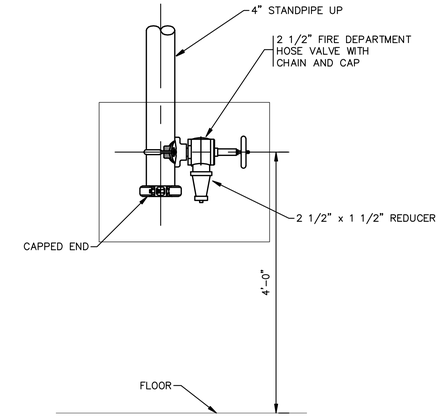

1 FIRE DEPARTMENT VALVE DETAIL
SCALE: NONE

LEGEND

0. INCOMING WATER SERVICE FROM STREET MAIN
1. DOUBLE DETECTOR CHECK VALVE ASSY.
2. GATE VALVE
3. TAMPER SWITCH (TYP.)
4. ECCENTRIC REDUCER
5. CONCENTRIC REDUCER
6. NON-SLAM CHECK VALVE
7. BY-PASS
8. PRESSURE GAUGE (TYP.)
9. AIR RELEASE VALVE
10. VOID
11. VOID
12. TO SPRINKLER SYSTEMS
13. TO FIRE PUMP TEST HEADER
14. FIRE PUMP (FP)
15. JOCKEY PUMP (JP)
16. CONCRETE HOUSEKEEPING PAD
17. MAIN DRAIN VALVE SPILL OVER FLR. DR.
18. FIRE PUMP CONTROLLER (FPC)
19. JOCKEY PUMP CONTROLLER (JPC)
20. 1/2" BRASS PIPE & FITTINGS (SENSING LINE)
21. GROUND-FACE UNION W/ ORIFICE
22. 1/2" GLOBE VALVES-TEE W/ PLUG
23. 4" TO FIRE DEPT.CONNECTION

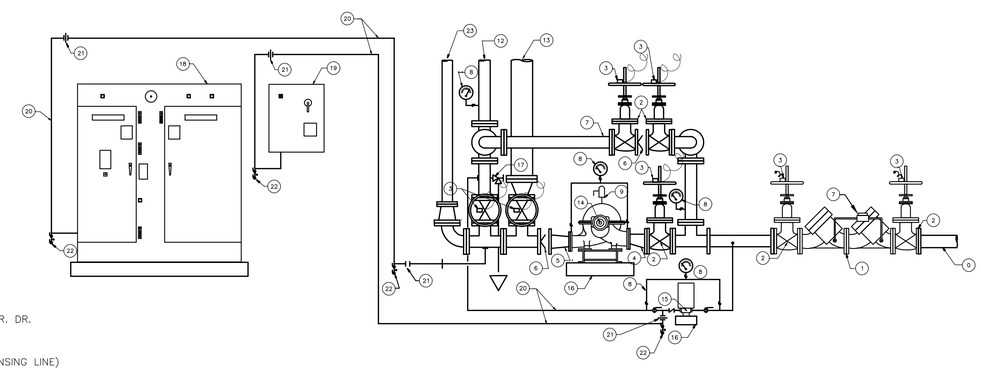

6 FIRE PUMP / JOKEY PUMP / CONTROLLERS ARRANGEMENT (FP 1 / JP 1)
SCALE: NONE

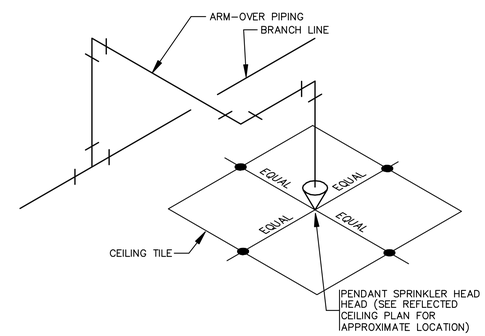

2 TYPICAL SPRINKLER HEAD LOCATION
SCALE: NONE

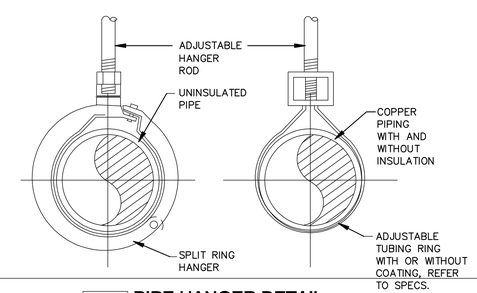

7 PIPE HANGER DETAIL
SCALE: NONE

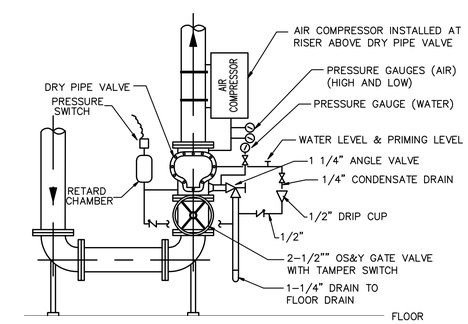

3 DRY PIPE VALVE DETAIL
SCALE: NONE

RS&H. IMPROVING YOUR WORLD

Reynolds, Smith and Hills, Inc.
4525 Airport Approach Rd, Ste A
Duluth, Minnesota 55811
218-722-1227 Fax: 218-722-1052
www.rsandh.com

DULUTH AIRPORT AUTHORITY

DULUTH INTERNATIONAL AIRPORT
DULUTH, MN

NEW TERMINAL DESIGN

CONSULTANTS

Interior Architects:
SJA ARCHITECTS
11 E Superior Street Suite 345, Duluth MN 55802
TEL: (218) 724-5976 / FAX: (218) 724-5717

Structural Engineers:
MBJ CONSULTING ENG.
501 Lake Avenue South, Suite 300, Duluth MN 55802
TEL: (218) 723-1020 / FAX: (218) 723-0369

MEP/FP Engineers:
COSENTINI ASSOCIATES INC.
1 South Wacker Drive, 37th Floor, Chicago IL 60606
TEL: (312) 201-7400 / FAX: (312) 201-0001

Baggage Handling Systems Consultants:
BNP ASSOCIATES INC.
101 East Ridge Office Park, Suite 100, Danbury CT 06810
TEL: (203) 792-2000 / FAX: (203) 792-4020

Landscaping Consultants:
APPOLD DESIGN
3432 East Flint Street, Duluth MN 55812
TEL: (218) 391-0979

SEAL

REVISIONS

NO.	DESCRIPTION	DATE

DATE ISSUED: 04-12-10
REVIEWED BY: XXX
DRAWN BY: HV
DESIGNED BY: SA

AEP PROJECT NUMBER
213-1882-091

© 2006 REYNOLDS, SMITH AND HILLS INC.

SHEET TITLE
FIRE PROTECTION DETAILS

SHEET NUMBER
F4-01

90% NOT FOR CONSTRUCTION

PUMP SCHEDULE

PUMP TAG	SERVICE	LOCATION	GPM EACH PUMP	TOTAL DYNAMIC HEAD	SHUT OFF HEAD	MOTOR DATA				MANUFACTURER	REMARKS
						HP	VOLTS	PH	RPM		
FP-1	FIRE PUMP	GROUND FLOOR					480				
JP-1	JOCKY PUMP	GROUND FLOOR					480				

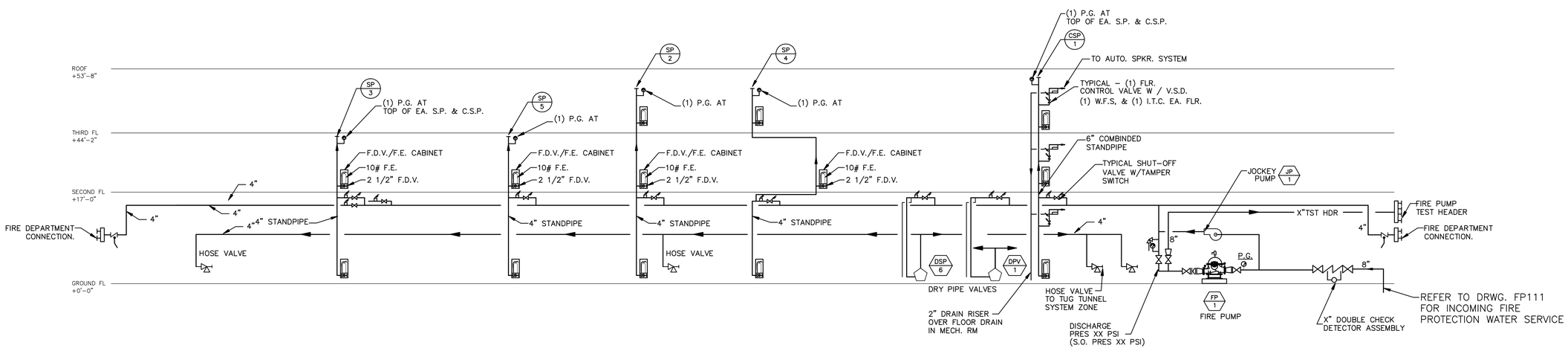

RS&H
IMPROVING YOUR WORLD

Reynolds, Smith and Hills, Inc.
4525 Airport Approach Rd, Ste A
Duluth, Minnesota 55811
218-722-1227 Fax: 218-722-1052
www.rsandh.com

DULUTH AIRPORT AUTHORITY

DULUTH INTERNATIONAL AIRPORT
DULUTH, MN

NEW TERMINAL DESIGN

CONSULTANTS

Interior Architects:
SJA ARCHITECTS
11 E Superior Street Suite 340, Duluth MN 55802
TEL: (218) 724-5576 / FAX: (218) 724-5717

Structural Engineers:
MBJ CONSULTING ENG.
501 Lake Avenue South, Suite 300, Duluth MN 55802
TEL: (218) 723-1658 / FAX: (218) 723-5599

MEP/FP Engineers:
COSENTINI ASSOCIATES INC.
1 South Wacker Drive, 37th Floor, Chicago IL 60606
TEL: (312) 391-7400 / FAX: (312) 391-6091

Baggage Handling Systems Consultants:
BNP ASSOCIATES INC.
101 East Ridge Office Park, Suite 100, Danbury CT 06810
TEL: (203) 792-5500 / FAX: (203) 792-4920

Landscaping Consultants:
APPOLD DESIGN
2432 East First Street, Duluth MN 55812
TEL: (218) 591-5979

SEAL

REVISIONS

NO.	DESCRIPTION	DATE

DATE ISSUED: 04-12-10
REVIEWED BY: XXX
DRAWN BY: HV
DESIGNED BY: SA

AEP PROJECT NUMBER
213-1882-091

© 2006 REYNOLDS, SMITH AND HILLS INC.

SHEET TITLE
FIRE PROTECTION SCHEDULES AND RISER DIAGRAM

SHEET NUMBER
F5-01

90% NOT FOR CONSTRUCTION

Drawing: I:\5528.00 Duluth Airport\5.0 CADD\(5.0) Fire Protection\Dwgs\5528_F501.dwg Plotted on: 4/9/2010 12:01 PM Plotted by: Volano, Henry

DULUTH AIRPORT

PAGING SYSTEM DRAWINGS

PAGING SYSTEM - SHEET INDEX		
		ISSUE
NO	DESCRIPTION	90% NFC
PG000	PAGING SYSTEM TITLE SHEET NOTES AND SYMBOLS	9-Apr-2010
PG001	PAGING SYSTEM EQUIPMENT SCHEDULE	9-Apr-2010
PG101	OVERALL FIRST FLOOR PLAN - FACILITY	9-Apr-2010
PG102	OVERALL SECOND FLOOR PLAN - FACILITY	9-Apr-2010
PG103	OVERALL THIRD FLOOR PLAN - FACILITY	9-Apr-2010
PG201	OVERALL FIRST FLOOR REFLECTED CEILING PLAN - FACILITY	9-Apr-2010
PG201A	PARTIAL FIRST FLOOR REFLECTED CEILING PLAN - FACILITY	9-Apr-2010
PG202	OVERALL SECOND FLOOR REFLECTED CEILING PLAN - FACILITY	9-Apr-2010
PG203	OVERALL THIRD FLOOR REFLECTED CEILING PLAN - FACILITY	9-Apr-2010
PG301	OVERALL FIRST FLOOR PLAN - INFRASTRUCTURE	--
PG302	OVERALL SECOND FLOOR PLAN - INFRASTRUCTURE	--
PG304	OVERALL THIRD FLOOR PLAN - INFRASTRUCTURE	--
PG401	OVERALL FIRST FLOOR REFLECTED CEILING PLAN - INFRASTRUCTURE	--
PG401A	OVERALL FIRST FLOOR REFLECTED CEILING PLAN - INFRASTRUCTURE	
PG402	OVERALL SECOND FLOOR REFLECTED CEILING PLAN - INFRASTRUCTURE	--
PG403	OVERALL THIRD FLOOR REFLECTED CEILING PLAN - INFRASTRUCTURE	--
PG500	EQUIPMENT ROOMS - ENLARGED PLANS	--
PG600	BUILDING DETAILS	--
PG601	INFRASTRUCTURE DETAILS	--
PG700	PAGING SYSTEM SIGNAL FLOW DIAGRAMS	--
PG702	PAGING SYSTEM SIGNAL FLOW DIAGRAMS	--
PG800	ELEVATIONS	--

ABBREVIATIONS

AFC – ABOVE FINISHED CEILING
AFF – ABOVE FINISHED FLOOR
AFP – ABOVE FINISHED PLATFORM
AS – ABOVE SLAB
A/V – AUDIOVISUAL
BFC – BELOW FINISHED CEILING
BSSH – BUILDING STANDARD SWITCH HEIGHT
BSRH – BUILDING STANDARD RECEPTACLE HEIGHT
CLG – CEILING
EC – EMPTY CONDUIT
GND – GROUND
IDF – INTERMEDIATE DISTRIBUTION FRAME
MC – MAIN CROSS-CONNECT
MCS – MULTIMEDIA COMMUNICATION SYSTEM
MDF – MAIN DISTRIBUTION FRAME
MH – MAINTENANCE HOLE
MMOF – MULTI-MODE OPTICAL FIBER
NIC – NOT IN CONTRACT
OC – ON CENTER
OD – OUTSIDE DIAMETER
OFE – OWNER FURNISHED EQUIPMENT
OSP – OUTSIDE PLANT CABLE
PB – PULLBOX
PBX – PRIVATE BRANCH EXCHANGE
PR – PAIR
RW – RACEWAY
SMOF – SINGLE-MODE OPTICAL FIBER
TEMP – TEMPORARY
TGB – AUDIO/VIDEO GROUNDING BUSBAR
TSER – AUDIO/VIDEO SERVICE ENTRANCE ROOM
TYP – TYPICAL
UON – UNLESS OTHERWISE NOTED
UPS – UNINTERRUPTED POWER SUPPLY
UTP – UNSHIELDED TWISTED PAIR
WP – WATERPROOF CLOSET
WS – WORK STATION
WW – WIREWAY

CABLING NOTES

1. WIRE AND CABLE SHEATH SHALL BE MAINTAINED TO FINAL DESTINATION. ALL UTP CABLE TERMINATIONS TO MAINTAIN TWIST OF INDIVIDUAL PAIRS TO WITHIN 1/2" OR LESS OF FINAL TERMINATION.
2. CABLES RUNNING IN PLENUM AREAS WITHOUT CONDUIT SHALL BE PLENUM RATED CABLE, AND MATCH THE SPECIFIED CABLE ABOVE. IT IS THE RESPONSIBILITY OF THE TECHNOLOGY CONTRACTOR TO INSPECT THE ELECTRICAL DRAWINGS, AND VERIFY IN WHAT SPACES PLENUM CABLE SHALL BE USED.
3. PROVIDE DESIGNATION LABELS FOR ALL TERMINATION BLOCKS, PATCH PANELS AND ALL TECHNOLOGY CABLES AT BOTH ENDS. ALL WIRES AND CABLES SHALL BE LABELED WITHIN 6" OF FINAL TERMINATION. ALL LABELS SHALL BE MACHINE PRINTED OR STENCILED.
4. INSTALL EACH CABLE SET INDICATED BY THE SYMBOLS LIST FROM THE OUTLET LOCATION BACK TO THE RESPECTIVE SERVING TELECOM CLOSET (UON)
5. ALL WIRING, CABLING, SYSTEM DEVICES AND SYSTEM CONTROLS SHALL BE INSTALLED IN COMPLIANCE WITH ALL CODE REQUIREMENTS AND MANUFACTURER'S INSTRUCTIONS AND PRACTICES UNLESS WRITTEN DIRECTION TO THE CONTRARY IS PROVIDED.
6. ALL WIRING AND CABLE RUNS IN CEILING AREAS WHERE CABLE TRAYS OR OTHER SIMILAR SUPPORT IS NOT SPECIFIED SHALL BE PROPERLY SUPPORTED BY J-HOOKS AT MAXIMUM OF 5'-0" INTERVALS. CABLES SHALL BE FULLY SUPPORTED USING ONLY CABLE TRAYS, CONDUITS, J-HOOKS AND/OR OTHER SPECIFIED SUPPORT HARDWARE. QUANTITY OF CABLES AND MOUNTING OF HARDWARE SHALL BE IN COMPLIANCE WITH MANUFACTURER INSTRUCTIONS AND SPECIFIED MAXIMUM FILL RATIOS.

GENERAL NOTES

1. WHERE EXACT DIMENSIONS ARE NOT INDICATED, THE SCALE OF THIS DRAWING IS SUFFICIENTLY ACCURATE FOR DETERMINING THE LOCATION OF EQUIPMENT, JUNCTION BOXES, OUTLET BOXES, WIREWAYS, PANELS, ETC. WHERE EXACT DIMENSIONS ARE INDICATED, THE REFERENCE SURFACE SHALL BE THE FINAL FINISHED SURFACE INCLUDING ANY ACOUSTICAL TREATMENT. ROOM DIMENSIONS ON THE DRAWINGS HAVE BEEN TAKEN FROM PRELIMINARY ARCHITECTURAL DRAWINGS. ALL DIMENSIONS MUST BE VERIFIED AND ANY DEVIATIONS CAUSING CHANGES EXCEEDING 3 INCHES MUST BE COORDINATED WITH THE ARCHITECT AND SHEN MILSOM & WILKE, INC.
2. DIMENSIONS SHOWN ARE SUGGESTED PLACEMENTS AND ARE PROVIDED FOR INFORMATION ONLY. COORDINATE ALL ELECTRICAL DEVICES AND DIMENSIONED LOCATIONS WITH ARCHITECTURAL AND ENGINEERING DRAWINGS. FOR TECHNOLOGY DEVICES, LIGHTING AND SWITCH LOCATIONS REFER TO THE ARCHITECTURAL DRAWINGS.
3. DRAWINGS ARE NOT TO BE USED FOR ARCHITECTURAL OR ENGINEERING PURPOSES. DRAWINGS SHOULD ONLY BE USED FOR TECHNOLOGY SYSTEM INSTALLATION & COORDINATION WITH OTHER CONTRACTORS AND SYSTEMS. COORDINATE PATHWAYS FOR ALL TECHNOLOGY RELATED DEVICES WITH ARCHITECTURAL AND ELECTRICAL PLANS.
4. ALL TECHNOLOGY DEVICES SHALL BE SECURELY MOUNTED PLUMB AND STRAIGHT TO WALLS, FLOORS, OR RACKS, PER THE MANUFACTURER'S RECOMMENDED MOUNTING PRACTICE.
5. ALL EQUIPMENT SHOWN IN PHANTOM IS FOR REFERENCE ONLY. SUCH EQUIPMENT WILL BE PROVIDED AND INSTALLED BY THE TECHNOLOGY TRADE CONTRACTOR.
6. INSTALL FIRESTOP TO ALL SLAB AND WALL PENETRATIONS PROVIDED FOR THE INSTALLATION OF CABLE AS REQUIRED TO MAINTAIN FIRE RATING OF SLAB OR WALL. REVIEW ARCHITECT'S PLAN FOR PARTITION TYPES.
7. THE METHOD OF INSTALLATION OF BOXES IN WALLS, AND THE METHOD OF PASSAGE OF CONDUIT AND WIREWAYS THROUGH ACOUSTICALLY SENSITIVE WALLS, SHALL BE COORDINATED WITH THE ACOUSTICAL CONSULTANT OR ARCHITECT.
8. ALL ELECTRICAL FOR TECHNOLOGY SHALL BE INSTALLED IN ACCORDANCE WITH LOCAL ELECTRICAL CODE AND SEISMIC REQUIREMENTS.
9. REFER TO ELECTRICAL SPECIFICATION FOR INSTALLATION INSTRUCTIONS FOR FLOORBOXES, JUNCTION BOXES, PLYWOOD PANELS, GROUNDING CONDUCTORS, BUSBARS, CONDUITS, CABLE TRAYS IN CORRIDORS, METALLIC ENCLOSURES, ELECTRICAL PANELBOARDS AND CIRCUITING. FIRE PROOFING SYSTEMS USED FOR ALL PENETRATIONS MUST BE APPROVED BY APPLICABLE AUTHORITIES PRIOR TO INSTALLATION.
10. ELECTRICAL FEEDS ARE NOT TO BE RUN PARALLEL WITH VIDEO AND/OR AUDIO LINES OR RACEWAYS. IF ELECTRICAL FEEDS MUST BE RUN PARALLEL TO AUDIO/VIDEO LINES, A MINIMUM OF 4'-0" OF SEPARATION MUST BE MAINTAINED.
11. POWER BREAKER PANELS ARE SIZED AND SPECIFIED BY THE ELECTRICAL ENGINEER; REFER TO ELECTRICAL DRAWINGS. ALL CIRCUITS SHALL BE PROTECTED BY 120VAC, 20 AMP BREAKERS UNLESS OTHERWISE NOTED.
12. POWER RECEPTACLES SHOWN ON TECHNOLOGY DRAWINGS ARE DEDICATED TO SPECIFIC TECHNOLOGY EQUIPMENT AND ARE SHOWN FOR REFERENCE ONLY. THESE RECEPTACLES SHOULD BE ISOLATED GROUND/COMMON PHASE. REFER TO ELECTRICAL DRAWINGS FOR ADDITIONAL UTILITY POWER RECEPTACLES.
13. WHERE POWER CIRCUITS ARE SHOWN TERMINATING INTO JUNCTION BOXES WITHOUT RECEPTACLES, THE WIRES SHALL BE TAPED AND THE BOXES COVERED. THESE CIRCUITS WILL BE CONNECTED BY OTHERS DURING INSTALLATION OF THE TECHNOLOGY SYSTEM EQUIPMENT.
14. GROUND ALL CONDUITS, CABLE TRAYS AND JUNCTION BOXES PER THE MANUFACTURER'S RECOMMENDATIONS AND PER ALL APPLICABLE CODES.
15. ALL EMPTY CONDUIT SHALL BE REAMED, CLEANED, CAPPED (WHERE APPROPRIATE), TAGGED, AND FURNISHED WITH PULL WIRES.
16. INSTALL CABLE TRAY FOR TELECOMMUNICATION WIRING TO MAINTAIN A MINIMUM OF 5" SEPARATION FROM FLUORESCENT LIGHTING.
17. THERE SHALL BE A MINIMUM OF ONE PULL BOX FOR EVERY 100' OF STRAIGHT EMPTY CONDUIT AND/OR ONE PULL BOX FOR MORE THAN TWO 90° BENDS OR LESSER BENDS TOTALING 180° IN A CONDUIT RUN.
18. MAINTAIN MINIMUM BEND RADIUS OF 10X OD FOR ALL CONDUITS.
19. STUB UP CONDUIT SLEEVES THROUGH SLABS 3" ABOVE FINISHED FLOORS, EXCEPT IN THE CASE OF ACCESS FLOORS, IN WHICH CASE STUB UPS SHALL TERMINATE UNDER THE ACCESS FLOOR.
20. ALL CABLE TRAY THAT IS SURFACE MOUNTED ON SLAB BELOW RAISED FLOOR SHALL BE SECURELY FASTENED TO SLAB. THESE TRAYS SHALL BE LEFT OPEN AND NOT PROVIDED WITH COVERS.
21. PROVIDE CONNECTION HARDWARE, GROUNDING LUGS AND STRAPS, THERMAL EXPANSION PLATES, SUPPORT BRACKETS, SPLICE HARDWARE, TERMINATION KITS, END SUPPORT KITS, CEILING SUPPORT HARDWARE, RUNWAY DROPOFFS AND 7" CABLE RETAINING POSTS FOR ALL CABLE TRAY LOCATIONS PER MANUFACTURERS RECOMMENDATIONS AND PER APPLICABLE CODES.
22. ALL POWER CONDUIT, POWER WIREWAYS, AND POWER JUNCTION BOXES ARE TO BE REVIEWED BY THE ELECTRICAL ENGINEER FOR CODE COMPLIANCE.
23. EMPTY CONDUIT RUNS ON THE TECHNOLOGY DRAWINGS SHOW ONLY INTERCONNECTION BETWEEN THE TERMINATION POINTS. THE EXACT PATH OF CONDUIT ARE TO BE DETERMINED BY THE ELECTRICAL ENGINEER AND FIELD CONDITIONS.
24. ALL CABLES ARE TO BE IN CONDUIT IN NON-ACCESSIBLE SPACES. THIS INCLUDES BOTH HORIZONTAL AND VERTICAL RUNS. CABLE IN ACCESSIBLE SPACES, HORIZONTAL RUNS ONLY, TO BE PLENUM-RATED CABLE.
25. NOTIFY OWNER'S REPRESENTATIVES OF ANY DISCREPANCIES BETWEEN THE EXISTING CONDITIONS AND THE TECHNOLOGY DRAWINGS. OBTAIN CLARIFICATION BEFORE PRECEDING WITH WORK.
26. TECHNOLOGY SYSTEMS CONTRACTOR SHALL RESTORE CEILINGS AND WALLS AND ANY OTHER SURFACES AFFECTED BY ITS WORK UPON COMPLETION OF WORK, WITH LIKE MATERIALS TO MATCH EXISTING CONSTRUCTION.
27. THE FINISHES FOR ALL JUNCTION BOX FACEPLATES, SPEAKER GRILLES, TABLE BOXES, FLOOR BOXES AND WALL BOXES SHALL BE SUBMITTED TO THE ARCHITECT FOR REVIEW AND APPROVAL PRIOR TO PROCUREMENT. ALL ELECTRICAL BOXES SHALL HAVE THE APPROPRIATE COVERS AND SCREWS INSTALLED BY THE ELECTRICAL CONTRACTOR TO MATCH THE FIT AND FINISH SPECIFIED BY THE ARCHITECT.
28. IT SHALL BE THE RESPONSIBILITY OF THE TECHNOLOGY CONTRACTOR TO VERIFY SIGNAL/CONDUIT PATHWAYS WITH THE ELECTRICAL ENGINEERS DRAWINGS.

AUDIO VISUAL SYMBOL LIST

SYMBOL (FLOOR MOUNTED)	DESCRIPTION	NOTES
FB FLOOR BOX	MULTI USE FLOOR BOX.	REFER TO FLOOR BOX SCHEDULE
SYMBOL (WALL MOUNTED)	**DESCRIPTION**	**NOTES**
XX YY TECHNOLOGY DEVICE	WALL BOX MOUNTED FLUSH WITH FINISHED SURFACE AT LOCATION SHOWN ON AV DRAWINGS. REFER TO TECHNOLOGY DEVICE BOX LEGEND BELOW FOR BOX TYPE AND SIZE.	–
X DATA OUTLET	DATA OUTLET REQUIRED FOR AV EQUIPMENT. REFER TO DATA DRAWINGS FOR INFRASTRUCTURE REQUIREMENTS.	SUB-NUMBER "X" INDICATES CABLE DROP QUANTITY
DUPLEX RECEPTACLE	ELECTRICAL POWER REQUIRED FOR AV EQUIPMENT MOUNTED AT BUILDING STANDARD OUTLET HEIGHT UNLESS NOTED OTHERWISE	–
QUADPLEX RECEPTACLE	ELECTRICAL POWER REQUIRED FOR AV EQUIPMENT MOUNTED AT BUILDING STANDARD OUTLET HEIGHT UNLESS NOTED OTHERWISE	–
SG SINGLE RECEPTACLE WITH SUPPLEMENTAL GROUND	ELECTRICAL POWER REQUIRED FOR AV EQUIPMENT MOUNTED AT BUILDING STANDARD OUTLET HEIGHT UNLESS NOTED OTHERWISE. DEVICE TO UTILIZE SUPPLEMENTAL GROUND	–
SG DUPLEX RECEPTACLE WITH SUPPLEMENTAL GROUND	ELECTRICAL POWER REQUIRED FOR AV EQUIPMENT MOUNTED AT BUILDING STANDARD OUTLET HEIGHT UNLESS NOTED OTHERWISE. DEVICE TO UTILIZE SUPPLEMENTAL GROUND	–
SG QUADPLEX RECEPTACLE WITH SUPPLEMENTAL GROUND	ELECTRICAL POWER REQUIRED FOR AV EQUIPMENT MOUNTED AT BUILDING STANDARD OUTLET HEIGHT UNLESS NOTED OTHERWISE. DEVICE TO UTILIZE SUPPLEMENTAL GROUND	–
R/L RAISE/LOWER SWITCH	SINGLE GANG OUTET MOUNTED AT BUILDING STANDARD SWITCH HEIGHT UNLESS NOTED OTHERWISE	–
SYMBOL (CEILING MOUNTED)	**DESCRIPTION**	**NOTES**
XX YY TECHNOLOGY DEVICE	CEILING MOUNTED BOX MOUNTED ABOVE ACCESSIBLE CEILING UNLESS OTHERWISE NOTED. REFER TO TECHNOLOGY DEVICE BOX LEGEND BELOW FOR BOX TYPE AND SIZE.	–
X DATA BOX	DATA DROP REQUIRED FOR AV EQUIPMENT MOUNTED ABOVE ACCESSIBLE CEILING. REFER TO DATA DRAWINGS FOR INFRASTRUCTURE REQUIREMENTS.	SUB-NUMBER "X" INDICATES CABLE DROP QUANTITY
M PROJECTION SCREEN MOTOR	MOUNT FLUSH IN FINISHED CEILING (UON). REFER TO DRAWING FOR AUDIOVISUAL CONDUIT SIZE.	
PS PROJECTION SCREEN RELAY BOX	MOUNT ON SLAB ABOVE FINISHED CEILING (UON). REFER TO DRAWING FOR AUDIOVISUAL CONDUIT SIZE.	SUPPLY LOW-VOLTAGE INTERFACE WITH SCREEN, BY ELECTRICAL CONTRACTOR. MAINTENANCE ACCESS TO BOX SHALL BE PROVIDED BY ARCHITECT.
DUPLEX RECEPTACLE	ELECTRICAL POWER REQUIRED FOR AV EQUIPMENT MOUNTED IN FINISHED CEILING UNLESS NOTED OTHERWISE	–
QUADPLEX RECEPTACLE	ELECTRICAL POWER REQUIRED FOR AV EQUIPMENT MOUNTED AIN FINISHED CEILING UNLESS NOTED OTHERWISE	–
SG SINGLE RECEPTACLE WITH SUPPLEMENTAL GROUND	ELECTRICAL POWER REQUIRED FOR AV EQUIPMENT MOUNTED IN FINISHED CEILING UNLESS NOTED OTHERWISE. DEVICE TO UTILIZE SUPPLEMENTAL GROUND	–
SG DUPLEX RECEPTACLE WITH SUPPLEMENTAL GROUND	ELECTRICAL POWER REQUIRED FOR AV EQUIPMENT MOUNTED IN FINISHED CEILING UNLESS NOTED OTHERWISE. DEVICE TO UTILIZE SUPPLEMENTAL GROUND	–
SG QUADPLEX RECEPTACLE WITH SUPPLEMENTAL GROUND	ELECTRICAL POWER REQUIRED FOR AV EQUIPMENT MOUNTED AT BUILDING STANDARD OUTLET HEIGHT UNLESS NOTED OTHERWISE. DEVICE TO UTILIZE SUPPLEMENTAL GROUND	–
SYMBOL (OTHER)	**DESCRIPTION**	**NOTES**
XXX XXX AV EQUIPMENT	AV EQUIPMENT DESIGNATION, REFER TO EQUIPMENT SCHEDULE FOR INFORMATION	–
1 SHEET NOTE	REFER TO SHEET NOTES	–

TECHNOLOGY DEVICE BOX LEGEND

XX YY BOX DESIGNATION ("XX")

BOX DESIGNATIONS ("XX") FOR THE TECHNOLOGY DEVICE BOXES SHOWN ABOVE ARE DEFINED USING THE FOLLOWING DEFINITIONS:

AV – AUDIO VISUAL BACKBOX
CAM – CAMERA BACKBOX
IR – INFRARED TRANSMITTER BACKBOX
S – SPEAKER BACKBOX
WB – WALL BOX BACKBOX
V – VIDEO BACKBOX

YY XX BOX TYPE ("YY")

BOX TYPE ("YY") FOR THE DEVICE SYMBOLS SHOWN ABOVE ARE DEFINED USING THE FOLLOWING SUB-NUMBER DESIGNATIONS:

GANG BOX DEFINITIONS	SCREW COVER BOX DEFINITIONS	SPECIALTY BACKBOX DEFINITIONS
1G – SINGLE GANG 2G – TWO GANG 3G – THREE GANG 4G – FOUR GANG 5G – FIVE GANG 6G – SIX GANG STUD PARTITIONS TO UTILIZE 3-1/2" DEEP BOXES WITH APPROPRIATE EXTENSION RING MASONRY BOXES TO BE 3-1/2" DEEP FIELD GANGABLE BOXES ARE NOT APPROVED COVER SCREWS MOUNTED TOP AND BOTTOM, UNLESS NOTED OTHERWISE	SC6 – 6"Wx6"Hx4"D SC12 – 12"Wx12"Hx4"D SC15 – 15"Wx15"Hx4"D SC18 – 18"Wx18"Hx4"D SC24 – 24"Wx24"Hx4"D ADDITIONAL BOX DEFINITIONS CAN BE DEFINED IN THE FOLLOWING CONVENTION SCAXBXC A=WIDTH, B=HEIGHT, C=DEPTH KNOCK OUT CONFIGURATION TO BE DETERMINED BASED ON FIELD CONDITIONS. COVERPLATE SCREWS TO BE MOUNTED TOP AND BOTTOM UNLESS NOTED OTHERWISE	SP"X"– REFER TO SPECIALTY BACKBOX SCHEDULE FOR INFORMATION "X" – DESIGNATES TYPE BOXES TO BE INSTALLED PER MANUFACTURERS INSTRUCTIONS.

RS&H IMPROVING YOUR WORLD
Reynolds, Smith and Hills, Inc.
4525 Airport Approach Rd, Ste A
Duluth, Minnesota 55811
218-722-1227 Fax: 218-722-1052
www.rsandh.com

DULUTH AIRPORT AUTHORITY

DULUTH INTERNATIONAL AIRPORT
DULUTH, MN

NEW TERMINAL DESIGN

CONSULTANTS

SJA Architects
Architecture | Planning | Interior Design
MBJ
CONSULTING STRUCTURAL ENGINEERS
901 LAKE AVENUE SOUTH
SUITE 300
DULUTH, MN 55802
TEL: 218.723.1056
FAX: 218.723.9306
www.mbjeng.com
BNP ASSOCIATES, INC.
SM&W
2 North Riverside Plaza
Suite 1460
Chicago, IL 60606
T. 312-559-4585
F. 312-559-5393
www.smwinc.com
SHEN MILSOM WILKE

REVISIONS

NO.	DESCRIPTION	DATE

DATE ISSUED: 00-00-00
REVIEWED BY: DP
DRAWN BY: RZ
DESIGNED BY: DP

AEP PROJECT NUMBER
213-1882-091

FILE_NM PLOT_DT

© 2009 REYNOLDS, SMITH AND HILLS INC.

SHEET TITLE
PAGING SYSTEM DRAWING LIST NOTES AND SYMBOLS LIST

SHEET NUMBER
PG000

90% NOT FOR CONSTRUCTION

$FILE$
$DATE TIME$

EQUIPMENT LIST	
ID	DESCRIPTION
	PAGING SYSTEM
MF	ASC MINI FRAME MAINFRAME SYSTEM 120V
	ACS MIC INTERFACE CARD
	ASCS TELEPHONE CARD
AMF1	AMPLIFIER MAIN FRAME
AMP1	AMPLIFIER CARD - 2X200W
AMP2	AMPLIFIER CARD - 1X400W
PS1	PAGING STATION HORIZONTAL FLUSH
PS2	PAGING STATION WALL HORIZONTAL FLUSH
PS3	PAGING STATION HORIZONTAL DESKTOP
	AMBIENT ANALYSIS SENSOR COLLECTOR
AS1	AMBIENT SENSOR
	BACKGROUND MUSIC HUB
	BACKGROUND MUSIC INTERFACE PANEL
	COMPUTER SYSTEM WITH RAID 1
	SOFTWARE - DATABASE
	SOFTWARE - 500ACS ENTERPRISE
	ENGINEERING/SOFTWARE SUPPORT
	SITE SUPPORT
AUX1	AUXILARY INPUT PLATE
ER1	EQUIPMENT RACK
PDU	POWER DISTRIBUTION UNIT
	REAR RACK RAIL
	LACING BARS
	DRAWER
BLANK	BLANK PANELS
UPS1	UNINTERRUPTABLE POWER SUPPLY
CS1	CEILING SPEAKER - GYP BD AND METAL PAN CEILINGS
CS2	CEILING SPEAKER - ACT CEILINGS
CS3	CEILING SPEAKER - CONF ROOMS
CS4	CEILING SPEAKER - LINEAR FOR BLADE CEILINGS
CS5	CEILING SPEAKER - HIGH CEILING AREAS - HIGH OUTPUT
WS1	WALL SPEAKER - 90 X 90 FULL RANGE OUTDOOR
WS2	WALL SPEAKER - PAGING HORN
C1	CABLE - CATEGORY 5E
C2	CABLE - AMBIENT SENSOR CABLE
C3	CABLE - 70V SPEAKER LINE - 18/2 TS
C4	CABLE - 70V SPEAKER LINE - 16/2 TS
C5	CABLE - KVM
C6	CABLE - MONITOR

RS&H
IMPROVING YOUR WORLD

Reynolds, Smith and Hills, Inc.
4525 Airport Approach Rd, Ste A
Duluth, Minnesota 55811
218-722-1227 Fax: 218-722-1052
www.rsandh.com

DULUTH AIRPORT AUTHORITY

DULUTH INTERNATIONAL AIRPORT
DULUTH, MN

NEW TERMINAL DESIGN

CONSULTANTS

SJA Architects
Architecture | Planning | Interior Design

MBJ
CONSULTING STRUCTURAL ENGINEERS
901 LAKE AVENUE SOUTH
SUITE 300
DULUTH, MN 55802
TEL: 218.723.1056
FAX: 218.722.9306
www.mbjeng.com

BNP
ASSOCIATES, INC.

SM&W
2 North Riverside Plaza
Suite 1460
Chicago, IL 60606
T. 312-559-4585
F. 312-559-5393
www.smwinc.com
SHEN MILSOM WILKE

REVISIONS

NO.	DESCRIPTION	DATE

DATE ISSUED: 00-00-00
REVIEWED BY: DP
DRAWN BY: RZ
DESIGNED BY: DP

AEP PROJECT NUMBER
213-1882-091

FILE_NM PLOT_DT

© 2009 REYNOLDS, SMITH AND HILLS INC.

SHEET TITLE

PAGING SYSTEM EQUIPMENT LIST

SHEET NUMBER

PG001

90% NOT FOR CONSTRUCTION

$FILE$
$DATE TIME$

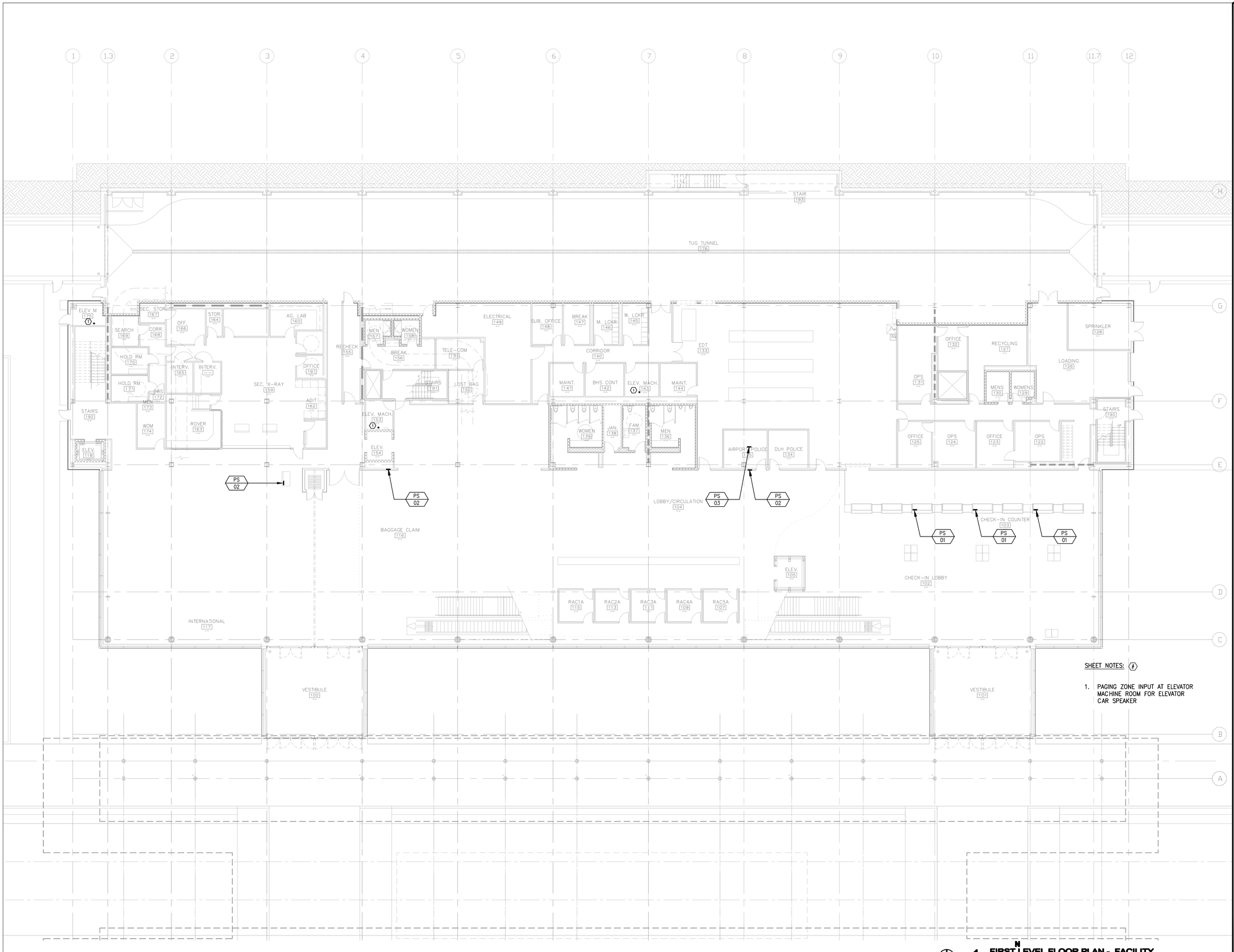

SHEET NOTES: (1)

1. PAGING ZONE INPUT AT ELEVATOR MACHINE ROOM FOR ELEVATOR CAR SPEAKER

1 FIRST LEVEL FLOOR PLAN - FACILITY
3/32" = 1'-0"

RS&H
IMPROVING YOUR WORLD

Reynolds, Smith and Hills, Inc.
4525 Airport Approach Rd, Ste A
Duluth, Minnesota 55811
218-722-1227 Fax: 218-722-1052
www.rsandh.com

DULUTH AIRPORT AUTHORITY

DULUTH INTERNATIONAL AIRPORT
DULUTH, MN

NEW TERMINAL DESIGN

CONSULTANTS

SJA Architects
Architecture | Planning | Interior Design

MBJ
CONSULTING STRUCTURAL ENGINEERS
901 LAKE AVENUE SOUTH
SUITE 300
DULUTH, MN 55802
TEL: 218.723.1054
FAX: 218.722.9306
www.mbjeng.com

BNP ASSOCIATES, INC.

SM&W
2 North Riverside Plaza
Suite 1460
Chicago, IL 60606
T. 312-559-4585
F. 312-559-5393
www.smwinc.com
SHEN MILSOM WILKE

REVISIONS

NO.	DESCRIPTION	DATE

DATE ISSUED: 00-00-00
REVIEWED BY: DP
DRAWN BY: RZ
DESIGNED BY: DP

AEP PROJECT NUMBER
213-1882-091

FILE_NM PLOT_DT

©2009 REYNOLDS, SMITH AND HILLS INC.

SHEET TITLE

PAGING SYSTEM FIRST LEVEL FLOOR PLAN - FACILITY

SHEET NUMBER

PG101

90% NOT FOR CONSTRUCTION

$FILE$
$DATE TIME$

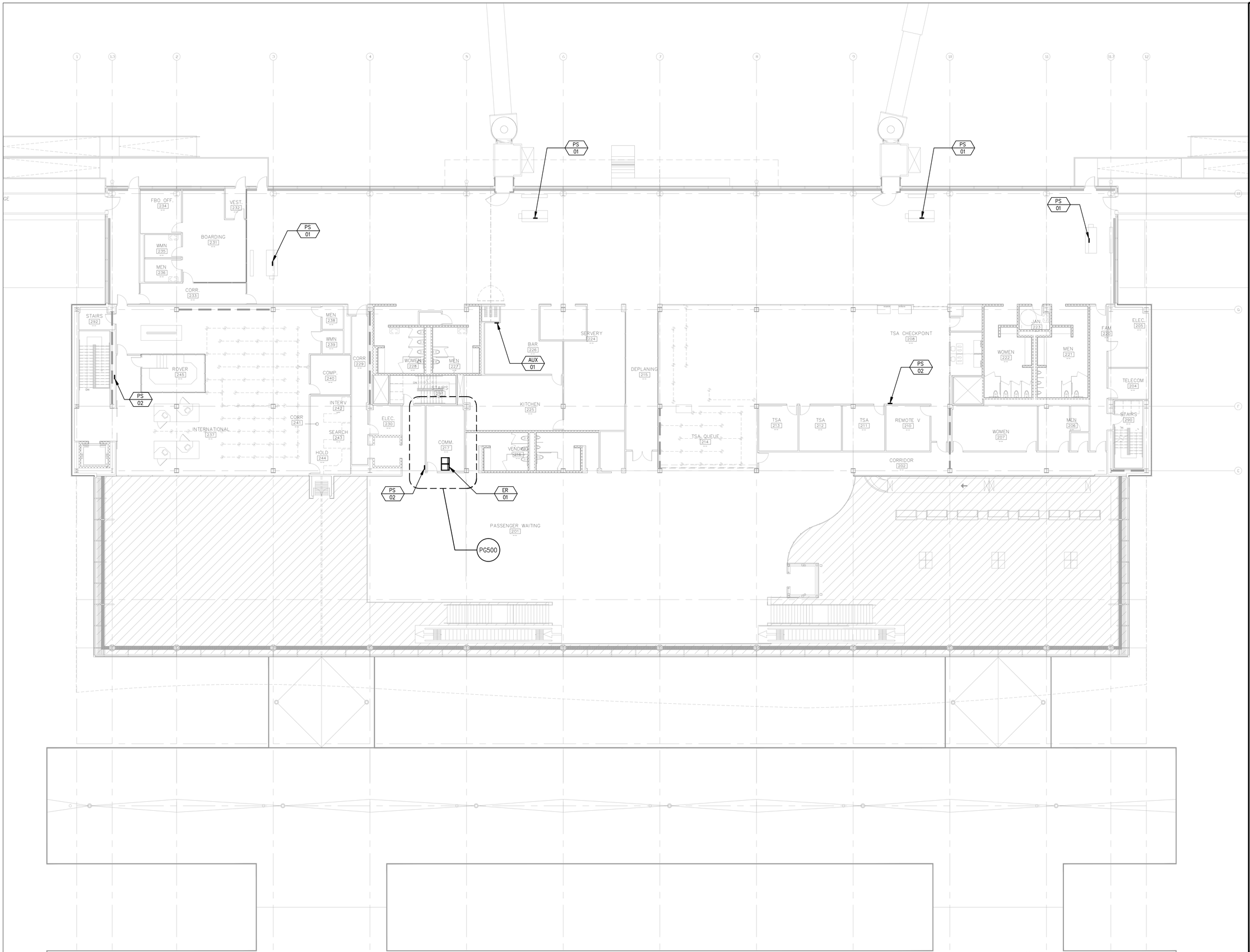

N

1 SECOND LEVEL FLOOR PLAN - FACILITY
3/32" = 1'-0"

$FILE$
$DATE TIME$

RS&H
IMPROVING YOUR WORLD

Reynolds, Smith and Hills, Inc.
4525 Airport Approach Rd, Ste A
Duluth, Minnesota 55811
218-722-1227 Fax: 218-722-1052
www.rsandh.com

DULUTH AIRPORT AUTHORITY

DULUTH INTERNATIONAL AIRPORT
DULUTH, MN

NEW TERMINAL DESIGN

CONSULTANTS

SJA Architects
Architecture | Planning | Interior Design

MBJ
CONSULTING STRUCTURAL ENGINEERS
901 LAKE AVENUE SOUTH
SUITE 300
DULUTH, MN 55802
TEL: 218.723.1054
FAX: 218.723.9306
www.mbjeng.com

BNP ASSOCIATES, INC.

SM&W
2 North Riverside Plaza
Suite 1460
Chicago, IL 60606
T. 312-559-4585
F. 312-559-5365
www.smwinc.com
SHEN MILSOM WILKE

REVISIONS

NO.	DESCRIPTION	DATE

DATE ISSUED: 00-00-00
REVIEWED BY: DP
DRAWN BY: RZ
DESIGNED BY: DP

AEP PROJECT NUMBER
213-1882-091

FILE_NM PLOT_DT

© 2009 REYNOLDS, SMITH AND HILLS INC.

SHEET TITLE
PAGING SYSTEM SECOND LEVEL FLOOR PLAN - FACILITY

SHEET NUMBER
PG102

90% NOT FOR CONSTRUCTION

N

1 THIRD LEVEL FLOOR PLAN - FACILITY
3/32" = 1'-0"

RS&H
IMPROVING YOUR WORLD

Reynolds, Smith and Hills, Inc.
4525 Airport Approach Rd, Ste A
Duluth, Minnesota 55811
218-722-1227 Fax: 218-722-1052
www.rsandh.com

DULUTH AIRPORT AUTHORITY

DULUTH INTERNATIONAL AIRPORT
DULUTH, MN

NEW TERMINAL DESIGN

CONSULTANTS

SJA Architects
Architecture | Planning | Interior Design

MBJ
CONSULTING STRUCTURAL ENGINEERS
901 LAKE AVENUE SOUTH
SUITE 300
DULUTH, MN 55802
TEL: 218.723.1054
FAX: 218.722.9306
www.mbjeng.com

BNP ASSOCIATES, INC.

SM&W
2 North Riverside Plaza
Suite 1460
Chicago, IL 60606
T. 312-559-4585
F. 312-559-5393
www.smwinc.com
SHEN MILSOM WILKE

REVISIONS

NO.	DESCRIPTION	DATE

DATE ISSUED: 00-00-00
REVIEWED BY: DP
DRAWN BY: RZ
DESIGNED BY: DP

AEP PROJECT NUMBER
213-1882-091

FILE_NM PLOT_DT

©2009 REYNOLDS, SMITH AND HILLS INC.

SHEET TITLE

PAGING SYSTEM
THIRD LEVEL FLOOR
PLAN - FACILITY

SHEET NUMBER

PG103

90% NOT FOR CONSTRUCTION

$FILE$
$DATE TIME$

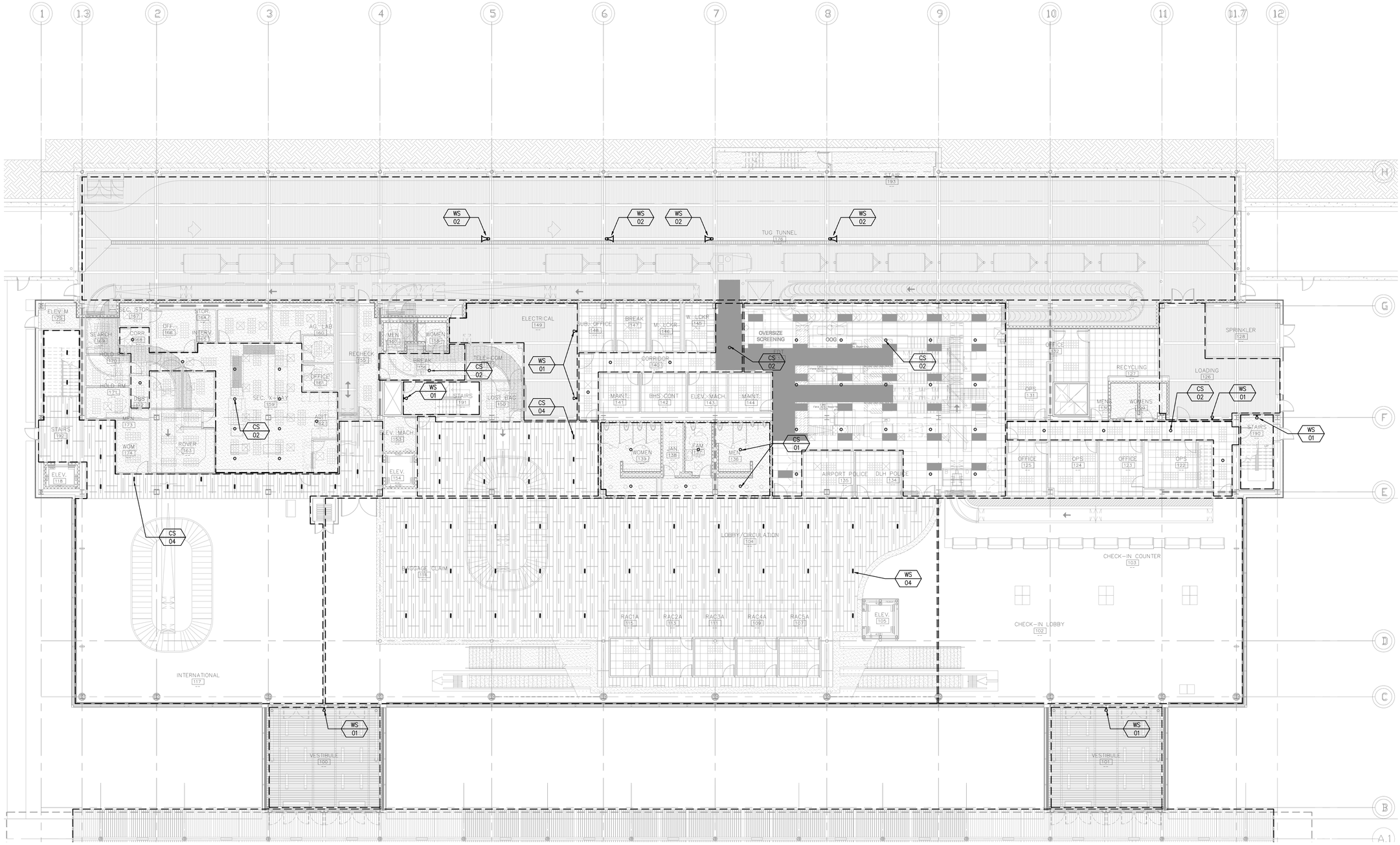

N

1 OVERALL FIRST FLOOR RCP - FACILITY
3/32" = 1'-0"

$FILE$
$DATE TIME$

RS&H
IMPROVING YOUR WORLD

Reynolds, Smith and Hills, Inc.
4525 Airport Approach Rd, Ste A
Duluth, Minnesota 55811
218-722-1227 Fax: 218-722-1052
www.rsandh.com

DULUTH AIRPORT AUTHORITY

DULUTH INTERNATIONAL AIRPORT DULUTH, MN

NEW TERMINAL DESIGN

CONSULTANTS

SJA Architects
Architecture | Planning | Interior Design

MBJ
CONSULTING STRUCTURAL ENGINEERS
901 LAKE AVENUE SOUTH
SUITE 300
DULUTH, MN 55802
TEL: 218.723.1056
FAX: 218.722.9306
www.mbjeng.com

BNP ASSOCIATES, INC.

SM&W
2 North Riverside Plaza
Suite 1460
Chicago, IL 60606
T. 312-559-4585
F. 312-559-5363
www.smwinc.com
SHEN MILSOM WILKE

REVISIONS

NO.	DESCRIPTION	DATE

DATE ISSUED: 00-00-00
REVIEWED BY: DP
DRAWN BY: RZ
DESIGNED BY: DP

AEP PROJECT NUMBER
213-1882-091
FILE_NM PLOT_DT

© 2009 REYNOLDS, SMITH AND HILLS INC.

SHEET TITLE
PAGING SYSTEM FIRST LEVEL RCP FLOOR PLAN - FACILITY

SHEET NUMBER
PG201

90% NOT FOR CONSTRUCTION

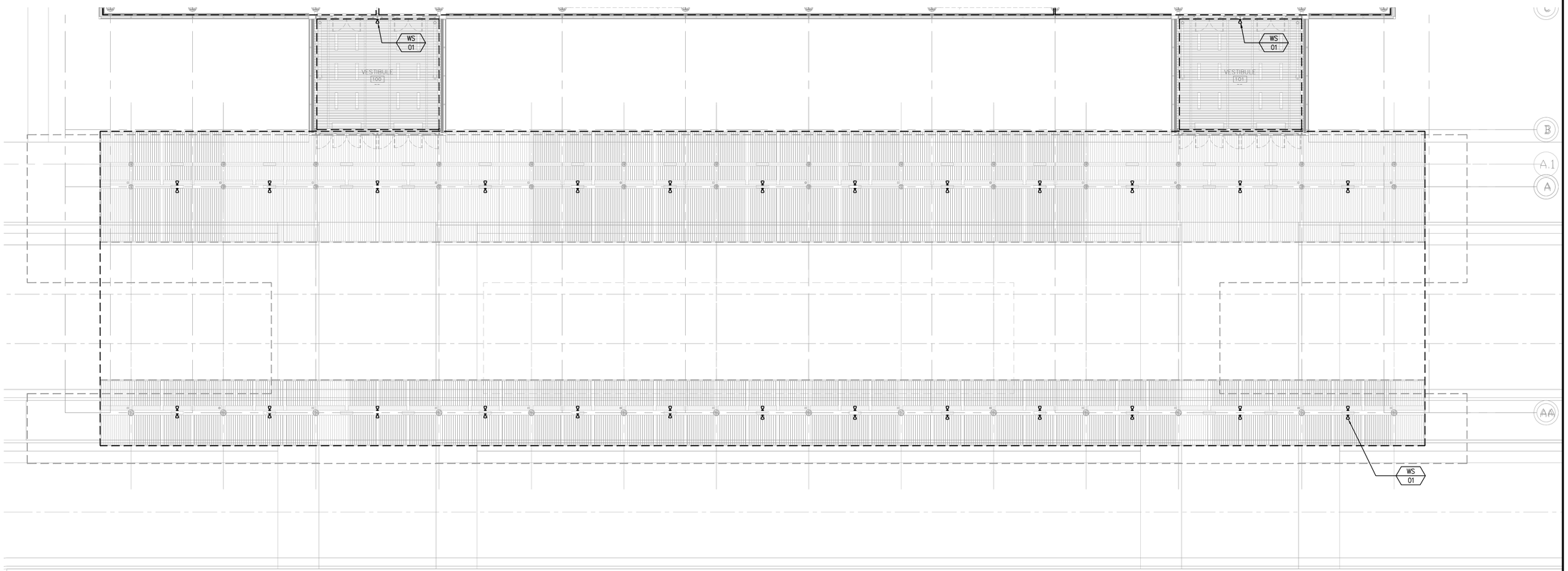

N

1 PARTIAL FIRST LEVEL RCP - FACILITY
3/32" = 1'-0"

$FILE$
$DATE TIME$

RS&H
IMPROVING YOUR WORLD

Reynolds, Smith and Hills, Inc.
4525 Airport Approach Rd, Ste A
Duluth, Minnesota 55811
218-722-1227 Fax: 218-722-1052
www.rsandh.com

DULUTH AIRPORT AUTHORITY

DULUTH INTERNATIONAL AIRPORT
DULUTH, MN

NEW TERMINAL DESIGN

CONSULTANTS

SJA Architects
Architecture | Planning | Interior Design

MBJ
CONSULTING STRUCTURAL ENGINEERS
901 LAKE AVENUE SOUTH
SUITE 300
DULUTH, MN 55802
TEL: 218.723.1056
FAX: 218.722.9306
www.mbjeng.com

BNP
ASSOCIATES, INC.

SM&W
2 North Riverside Plaza
Suite 1400
Chicago, IL 60606
T. 312-559-4585
F. 312-559-5393
www.smwinc.com
SHEN MILSOM WILKE

REVISIONS

NO.	DESCRIPTION	DATE

DATE ISSUED: 00-00-00
REVIEWED BY: DP
DRAWN BY: RZ
DESIGNED BY: DP

AEP PROJECT NUMBER
213-1882-091

FILE_NM PLOT_DT

© 2009 REYNOLDS, SMITH AND HILLS INC.

SHEET TITLE

PAGING SYSTEM
PARTIAL FIRST LEVEL
RCP PLAN - FACILITY

SHEET NUMBER

PG201A

90% NOT FOR CONSTRUCTION

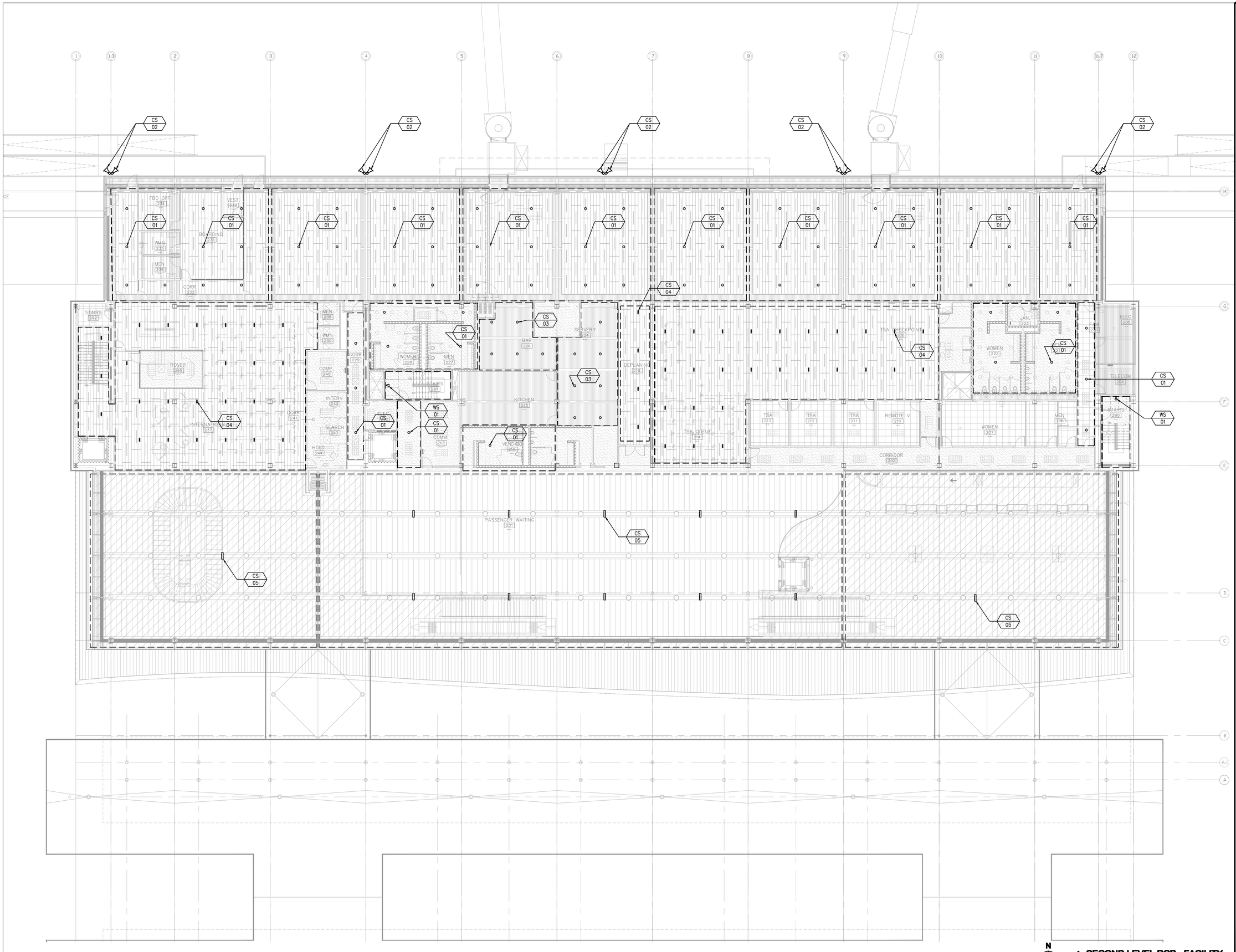

N

1 SECOND LEVEL RCP - FACILITY
3/32" = 1'-0"

RS&H
IMPROVING YOUR WORLD

Reynolds, Smith and Hills, Inc.
4525 Airport Approach Rd, Ste A
Duluth, Minnesota 55811
218-722-1227 Fax: 218-722-1052
www.rsandh.com

DULUTH AIRPORT AUTHORITY

DULUTH INTERNATIONAL AIRPORT DULUTH, MN

NEW TERMINAL DESIGN

CONSULTANTS

SJA Architects
Architecture | Planning | Interior Design

MBJ
CONSULTING STRUCTURAL ENGINEERS
901 LAKE AVENUE SOUTH
SUITE 300
DULUTH, MN 55802
TEL: 218.723.1054
FAX: 218.723.9306
www.mbjeng.com

BNP ASSOCIATES, INC.

SM&W
2 North Riverside Plaza
Suite 1460
Chicago, IL 60606
T. 312-559-4585
F. 312-559-5393
www.smwinc.com
SHEN MILSOM WILKE

REVISIONS

NO.	DESCRIPTION	DATE

DATE ISSUED: 00-00-00
REVIEWED BY: DP
DRAWN BY: RZ
DESIGNED BY: DP

AEP PROJECT NUMBER
213-1882-091

FILE_NM PLOT_DT

© 2009 REYNOLDS, SMITH AND HILLS INC.

SHEET TITLE

PAGING SYSTEM
SECOND LEVEL RCP
PLAN - FACILITY

SHEET NUMBER

PG202

90% NOT FOR CONSTRUCTION

$FILE$
$DATE TIME$

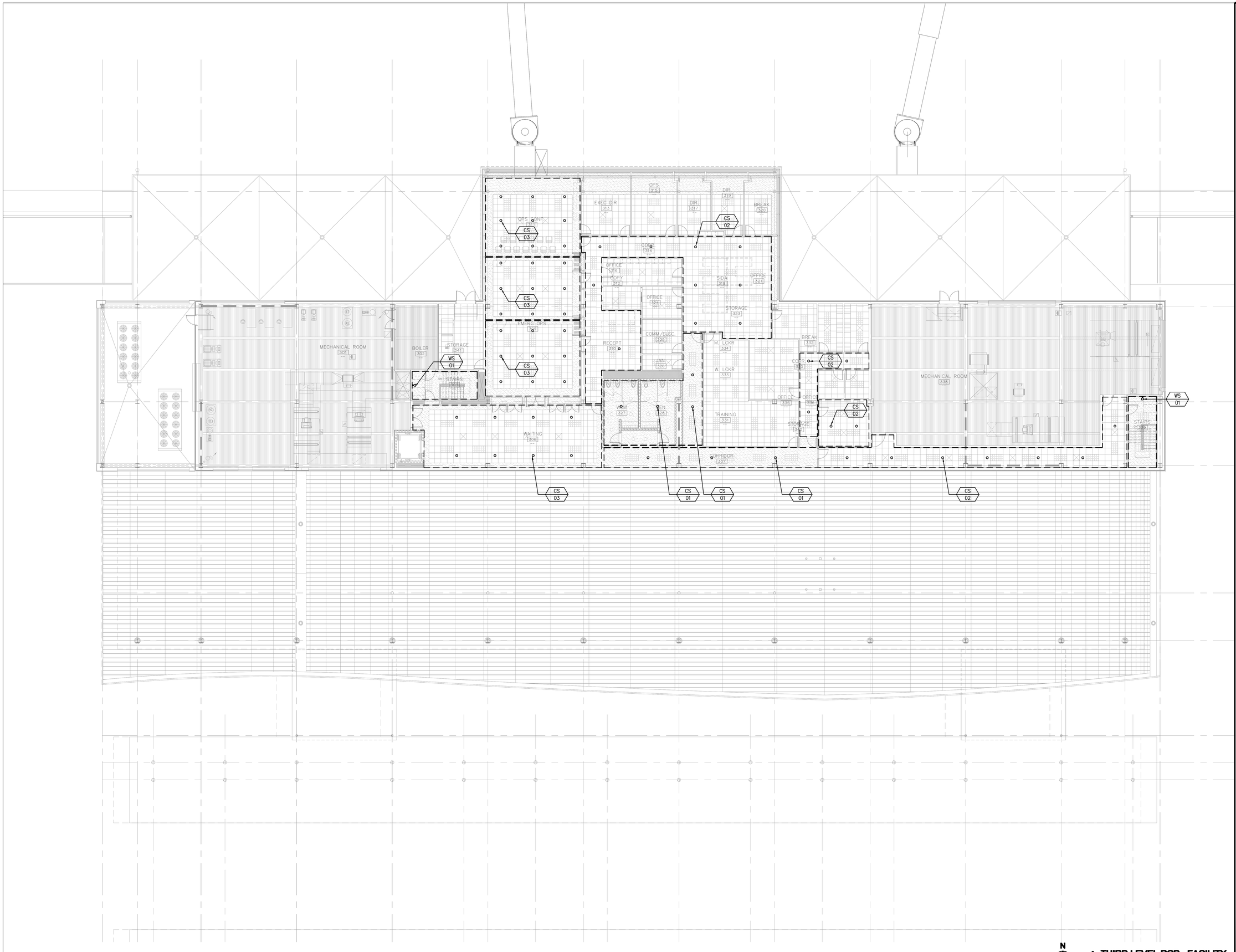

N

1 THIRD LEVEL RCP - FACILITY
3/32" = 1'-0"

RS&H
IMPROVING YOUR WORLD

Reynolds, Smith and Hills, Inc.
4525 Airport Approach Rd, Ste A
Duluth, Minnesota 55811
218-722-1227 Fax: 218-722-1052
www.rsandh.com

DULUTH AIRPORT AUTHORITY

DULUTH INTERNATIONAL AIRPORT
DULUTH, MN

NEW TERMINAL DESIGN

CONSULTANTS

SJA Architects
Architecture | Planning | Interior Design

MBJ
CONSULTING STRUCTURAL ENGINEERS
901 LAKE AVENUE SOUTH
SUITE 300
DULUTH, MN 55802
TEL: 218.723.1054
FAX: 218.722.9306
www.mbjeng.com

BNP ASSOCIATES, INC.

SM&W
2 North Riverside Plaza
Suite 1460
Chicago, IL 60606
T. 312-559-4585
F. 312-559-5393
www.smwinc.com
SHEN MILSOM WILKE

REVISIONS

NO.	DESCRIPTION	DATE

DATE ISSUED: 00-00-00
REVIEWED BY: DP
DRAWN BY: RZ
DESIGNED BY: DP

AEP PROJECT NUMBER
213-1882-091

FILE_NM PLOT_DT

©2009 REYNOLDS, SMITH AND HILLS INC.

SHEET TITLE
PAGING SYSTEM
THIRD LEVEL RCP
PLAN - FACILITY

SHEET NUMBER
PG203

90% NOT FOR CONSTRUCTION

$FILE$
$DATE TIME$

CONVEYOR LEGEND FOR PLANS

90° POWER TURN
(OPTIONAL DRIVE LOCATIONS)

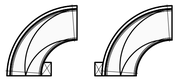
90° SPIRAL POWER TURN
(OPTIONAL DRIVE LOCATIONS)

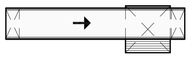
60" PULLER DRIVE

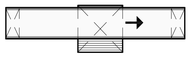
60" CENTER DRIVE

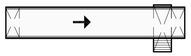
24" MINI-PULLER DRIVE

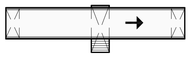
24" MINI-CENTER DRIVE

END ROLLER

60" UNDER SLUNG DRIVE
(AT LOAD/UNLOAD LOCATION)

METERING CONVEYOR

METERING CONVEYOR WITH
UNDER SLUNG DRIVE

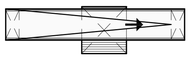
INCLINE CONVEYOR
(DRIVE LOCATION VARIES)

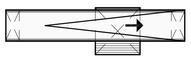
DECLINE CONVEYOR
(DRIVE LOCATION VARIES)

FIRE/SECURITY DOOR

MOTOR CONTROL PANEL

CONVEYOR LEGEND FOR ELEVATIONS

90° POWER TURN
(OPTIONAL DRIVE LOCATIONS)

90° SPIRAL POWER TURN
(OPTIONAL DRIVE LOCATIONS)

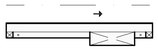
60" PULLER DRIVE

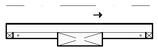
60" CENTER DRIVE

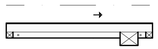
24" MINI-PULLER DRIVE

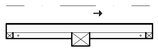
24" MINI-CENTER DRIVE

END ROLLER

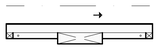
60" UNDER SLUNG DRIVE
(AT LOAD/UNLOAD LOCATION)

METERING CONVEYOR

METERING CONVEYOR WITH
UNDER SLUNG DRIVE

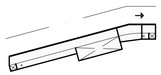
INCLINE CONVEYOR
(DRIVE LOCATION VARIES)

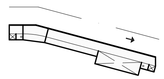
DECLINE CONVEYOR
(DRIVE LOCATION VARIES)

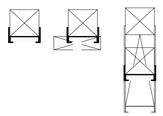
CONVEYOR CROSS SECTIONS
(DRIVE LOCATION VARIES)

FIRE/SECURITY DOOR

MOTOR CONTROL PANEL

CONVEYOR LEGEND FOR PLANS

POWER FACE DIVERT
WITH ASSOCIATED
TRANSFER PLATES

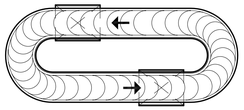
FLAT PLATE DEVICE

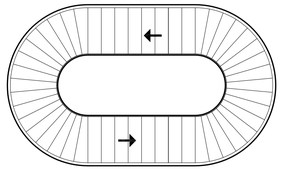
INCLINE PLATE DEVICE

BAGGAGE DIMENSION
DEVICE

CT80 DR - EDS MACHINE
(FOR REFERENCE ONLY)

CONVEYOR LEGEND FOR ELEVATIONS

POWER FACE DIVERT

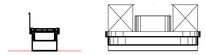
FLAT PLATE DEVICE
WITH CROSS SECTION

INCLINE PLATE DEVICE
WITH CROSS SECTION

BAGGAGE DIMENSION
DEVICE

CT80 - EDS MACHINE
(FOR REFERENCE ONLY)

Sheet List Table

Sheet Number	Sheet Title
BG001	BAGGAGE HANDLING SYSTEM LEGEND SYMBOLS AND ABBREVIATIONS
BG002	BAGGAGE HANDLING SYSTEM LEGEND SYMBOLS AND ABBREVIATIONS
B1001	BAGGAGE HANDLING SYSTEM TSA REIMBURSABLE PLAN
B2100	BAGGAGE HANDLING SYSTEM GENERAL ARRANGEMENT
B2101	BAGGAGE HANDLING SYSTEM PARTIAL PLAN CLAIM HALL
B2102	BAGGAGE HANDLING SYSTEM PARTIAL PLAN TICKETING AND CBIS
B2103	BAGGAGE HANDLING SYSTEM CBIS ENLARGED PLAN
B3101	BAGGAGE HANDLING SYSTEM SECTIONS
B3102	BAGGAGE HANDLING SYSTEM SECTIONS
B6102	BAGGAGE HANDLING SYSTEM CBIS TSA EGRESS PATH
B7100	BAGGAGE HANDLING SYSTEM CONTROL STATION DETAILS
B7101	BAGGAGE HANDLING SYSTEM CLAIM CONTROL STATION LAYOUT
B7102	BAGGAGE HANDLING SYSTEM CBIS CONTROL STATION LAYOUT
B8101	BAGGAGE HANDLING SYSTEM TYPICAL DETAILS CONVEYOR LOADING
B8102	BAGGAGE HANDLING SYSTEM TYPICAL DETAILS CONVEYOR LOADING
B8103	BAGGAGE HANDLING SYSTEM TYPICAL DETAILS ATTACHMENTS
B8104	BAGGAGE HANDLING SYSTEM TYPICAL DETAILS ATTACHMENTS
B8105	BAGGAGE HANDLING SYSTEM TYPICAL DETAILS CT80 DR
B8106	BAGGAGE HANDLING SYSTEM TYPICAL DETAILS IMPACT PROTECTION
B8107	BAGGAGE HANDLING SYSTEM TYPICAL DETAILS FLARED MU SIDEGUARD
B8108	BAGGAGE HANDLING SYSTEM TYPICAL DETAILS FIRE DOOR
B8109	BAGGAGE HANDLING SYSTEM DETAILS TYPICAL WARNING SIGNAGE
B8110	BAGGAGE HANDLING SYSTEM DETAILS TYPICAL WARNING SIGNAGE

RS&H
Architectural, Engineering, Planning and Environmental Services
Reynolds, Smith and Hills, Inc.
850 East Diehl Rd., Suite 120
Naperville, IL 60563
630-505-1991 FAX 630-505-1977
www.rsandh.com

DULUTH AIRPORT AUTHORITY

DULUTH INTERNATIONAL AIRPORT
DULUTH, MN

NEW TERMINAL DESIGN

CONSULTANTS

SJA ARCHITECTS
11 E Superior Street Suite 340, Duluth MN 55802
TEL: (218) 724-8578 / FAX: (218) 724-8717
www.staniusjohnson.com

MBJ CONSULTING ENG.
501 Lake Avenue South, Suite 300, Duluth MN 55802
TEL: (218) 722-1056 / FAX: (218) 722-9306
www.mbjeng.com

BNP ASSOCIATES INC.
14 Fairfield Drive Brookfield, CT 06804
TEL: (203) 792-3000 / FAX: (203) 792-4900
www.bnpassociates.com

COSENTINI
1 East Wacker Drive, Suite 103, Chicago IL 60601
TEL: (312) 670-1800 / FAX: (312) 670-1801
www.cosentini.com

APPOLD DESIGN
2432 East First Street, Duluth MN 55812
TEL: (218) 591-5079
www.appoloddesign.com

KRAUS-ANDERSON
3716 Oneota Street, Duluth MN 55807
TEL: (218) 722-3775
www.krausanderson.com

LIGHTING
XXXXXXXXX
TEL: (XXX) XXX-XXXX
www.XXXXXXX.com

REVISIONS

	DESCRIPTION	DATE
-	-	-

DATE ISSUED: 04-05-2010
REVIEWED BY: BNP
DRAWN BY: KAS
DESIGNED BY: BNP

AEP PROJECT NUMBER
213-1882-091

© 2009 REYNOLDS, SMITH AND HILLS INC.

SHEET TITLE
BAGGAGE HANDLING SYSTEM LEGEND SYMBOLS AND ABBREVIATIONS

NO. SHEET NUMBER
BG001

90% NOT FOR CONSTRUCTION

$FILE$
$DATE TIME$

GENERAL SYMBOL LEGEND

TUG & CART TRAFFIC FLOW DIRECTION

CONVEYOR FLOW DIRECTION

CONVEYOR REVERSE FLOW DIRECTION

TOP OF BELT ELEVATION
UNLESS OTHERWISE NOTED

MCP-PNP

POWER DISTRIBUTION POINT
(BHS POWER DISTRIBUTION PANEL)

XX–YY

ITEM NUMBER
NEW OR REWORKED EQUIPMENT

FUTURE CONVEYORS

NEW CONVEYORS

NEW CONVEYORS WITH
MAINTENANCE PLATFORM

IDENTIFICATION NOMENCLATURE

NEW OR REWORKED CONVEYOR I.D.

XX–YY

- YY: SEQUENTIAL NUMBER OF SUBSYSTEMS OF THIS TYPE
- XX: SUBSYSTEM DESCRIPTION IDENTIFIER

1ST SET OF ALPHA CHARACTERS SUBSYSTEM DESCRIPTION

'CB'	-	CLEAR BAG LINE
'CD'	-	CLAIM DEVICE
'EDS'	-	SCREENING LINE
'MU'	-	MAKE-UP UNIT
'OOG'	-	OUT OF GAUGE LINE
'RC'	-	RECHECK LINE
'SB'	-	SUSPECT BAG LINE
'TC'	-	TICKET COUNTER LINE

SHEET NUMBER DESIGNATIONS

B0000

- 00: BUILDING ZONE (SHEET NUMBER)
- 0: BUILDING LEVEL
- 0: DRAWING SERIES
- B: DISCIPLINE DESIGNATOR

SHEET REFERENCING NUMBERING FOR SECTIONS AND DETAILS

1
B0.00.00

- 1: DETAIL NUMBER ON SHEET
- B0.00.00: CROSS REFERENCE SHEET NUMBER

ABBREVIATIONS

GENERAL ABBR.	DESCRIPTION	GENERAL ABBR.	DESCRIPTION
AFF	ABOVE FINISHED FLOOR	NIC	NOT IN CONTRACT
ARCH	PROJECT ARCHITECT	NO	NUMBER
BF	BETWEEN FRAME	OA	OVERALL
BHS	BAGGAGE HANDLING SYSTEM	O/C	ON CENTER
BHSC	BAGGAGE HANDLING SYSTEM CONTRACTOR	OPS	OPERATIONS
BIDS	BAGGAGE INFORMATION DISPLAY SYSTEM	PAX	PASSENGERS
BMA	BAGGAGE MEASUREMENT ARRAY	PDP	POWER DROP POINT
BLDG	BUILDING	PLATF	PLATFORM
BOS	BOTTOM OF STEEL	PT	POWER TURN
BOT	BOTTOM	REF	REFERENCE
CENT'L	CENTRAL	REQ'D	REQUIRED
CL	CENTER LINE	SIM	SIMILAR
CLR	CLEAR	SS	STAINLESS STEEL
CNTR	CONTAINER	STR	STRUCTURE
CONC	CONCRETE	TEMP	TEMPORARY
CONT	CONTINUOUS	TERM	TERMINAL
CONV	CONVEYOR	TOB	TOP OF BELT
DWG	DRAWING	TOP	TOP OF PLATFORM
EL	ELEVATION	TOS	TOP OF STEEL
ENGR	ENGINEER OF RECORD	VIF	VERIFY IN FIELD
EQUIP	EQUIPMENT		
FIN	FINISH		
FL	FLOOR		
GC	GENERAL CONTRACTOR		
HP	HIGH POINT		
ID	IDENTIFICATION		
INTFC	INTERFACE		
INT'L	INTERNATIONAL		
LVL	LEVEL		
MAINT	MAINTENANCE		
MIN	MINIMUM		
MCP	MOTOR CONTROL PANEL		

GENERAL NOTES

THE FOLLOWING, TOGETHER WITH THE PROJECT SPECIFICATIONS AND BHS DRAWINGS SHALL APPLY;

1. CHECK AND FIELD VERIFY ALL BHS RELATED DIMENSIONS ON THE JOB SITE BEFORE PROCEEDING WITH WORK, AND BE RESPONSIBLE FOR THEIR ACCURACY. IF DISCREPANCIES ARE FOUND BETWEEN THE BHS DRAWINGS, SPECIFICATIONS AND FIELD CONDITIONS, THEY SHALL BE REPORTED TO THE OWNER'S REPRESENTATIVE.
2. NO DIMENSIONS SHALL BE SCALED, DRAWINGS DIMENSIONS SHOWN SHALL BE USED.
3. REFERENCE STRUCTURAL DRAWINGS FOR BEAM LOCATIONS.
4. CONVEYOR CONTRACTOR TO COORDINATE WITH ALL OTHER TRADES TO MAINTAIN BAGGAGE SYSTEM RIGHT-OF-WAY.
5. ALL DIMENSIONS ARE FROM COLUMN CENTER LINE TO FACE OF CONVEYOR SIDE GUARD, UNLESS OTHER WISE NOTED.
6. COORDINATE WITH ALL OTHER TRADES TO MAINTAIN 3'-0" CLEAR RIGHT-OF-WAY FROM TOP OF BELT TO NEAREST OBSTRUCTION. HANGING OF ANY EQUIPMENT COMPONENTS MECHANICAL, ELECTRICAL, PLUMBING, HVAC OR OTHER FROM THE CONVEYOR, CATWALK OR ASSOCIATED SUPPORTS IS NOT ALLOWED.

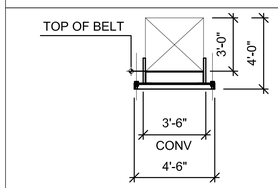

STANDARD CONVEYOR

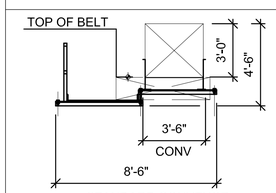

STANDARD CONVEYOR
WITH PLATFORM

RS&H
Architectural, Engineering, Planning and Environmental Services

Reynolds, Smith and Hills, Inc.
850 East Diehl Rd., Suite 120
Naperville, IL 60563
630-505-1991 FAX 630-505-1977
www.rsandh.com

DULUTH AIRPORT AUTHORITY

DULUTH
INTERNATIONAL
AIRPORT
DULUTH, MN

NEW TERMINAL
DESIGN

CONSULTANTS

SJA ARCHITECTS
11 E Superior Street Suite 340, Duluth MN 55802
TEL: (218) 724-8578 / FAX: (218) 724-8717
www.staniusjohnson.com

MBJ CONSULTING ENG.
501 Lake Avenue South, Suite 300, Duluth MN 55802
TEL: (218) 722-1056 / FAX: (218) 722-9306
www.mbjeng.com

BNP ASSOCIATES INC.
14 Fairfield Drive Brookfield, CT 06804
TEL: (203) 792-3000 / FAX: (203) 792-4900
www.bnpassociates.com

COSENTINI
1 East Wacker Drive, Suite 103, Chicago IL 60601
TEL: (312) 670-1800 / FAX: (312) 670-1801
www.cosentini.com

APPOLD DESIGN
2432 East First Street, Duluth MN 55812
TEL: (218) 591-5079
www.appoloddesign.com

KRAUS-ANDERSON
3716 Oneota Street, Duluth MN 55807
TEL: (218) 722-3775
www.krausanderson.com

LIGHTING
XXXXXXXXX
TEL: (XXX) XXX-XXXX
www.XXXXXXX.com

REVISIONS

	DESCRIPTION	DATE
-	-	-

DATE ISSUED: 04-05-2010
REVIEWED BY: BNP
DRAWN BY: KAS
DESIGNED BY: BNP

AEP PROJECT NUMBER
213-1882-091

© 2009 REYNOLDS, SMITH AND HILLS INC.

SHEET TITLE
BAGGAGE HANDLING SYSTEM
LEGEND SYMBOLS AND
ABBREVIATIONS

NO. SHEET NUMBER
BG002

90% NOT FOR CONSTRUCTION

$FILE$
$DATE TIME$

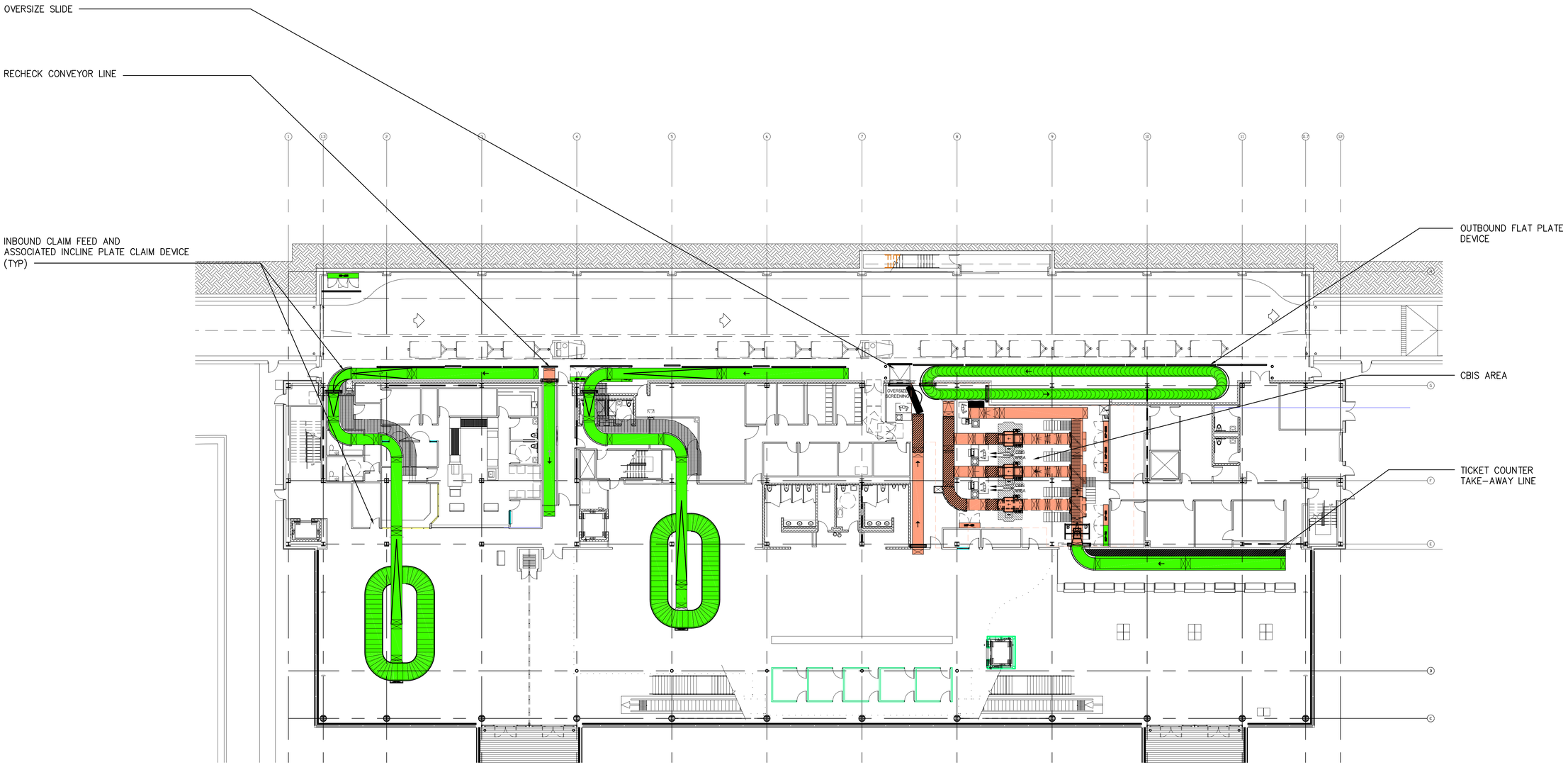

1 B1001 OVERALL REIMBURSABLE PLAN
1/16" = 1'-0"

REIMBURSABLE - CBIS/BHS INSTALLATION

- EDS MACHINES
- EDS TRANSPORT CONVEYORS FROM ATR
  EDS SCREENING CONVEYORS
  EDS CLEAR BAG LINES
  SUSPECT BAG CONVEYORS
  CLEAR BAG CONVEYORS
  POWER DISTRIBUTION PANELS
  MOTOR CONTROL PANELS
  PROGRAMMABLE LOGIC CONTROLLERS
  COMPUTER SYSTEM
  AUTOMATIC BAG TAG READER (BDD/ATR)
  PLATFORM ADJACENT TO CONVEYORS CONSIDERED AS REIMBURSABLE
  CBRA/ETD AREA
  CBRA/ETD OUT OF GAUGE AREA

NON-REIMBURSABLE

- RE-CHECK CONVEYORS
  MAKE-UP DEVICE
  INBOUND CLAIM FEED CONVEYORS AND INCLINE PLATE DEVICE

PARTIALLY REIMBURSABLE

- BHS CONTROL ROOM

$FILE$
$DATE TIME$

RS&H
Architectural, Engineering, Planning and Environmental Services
Reynolds, Smith and Hills, Inc.
850 East Diehl Rd., Suite 120
Naperville, IL 60563
630-505-1991 FAX 630-505-1977
www.rsandh.com

DULUTH AIRPORT AUTHORITY

DULUTH INTERNATIONAL AIRPORT
DULUTH, MN

NEW TERMINAL DESIGN

CONSULTANTS

SJA ARCHITECTS
11 E Superior Street Suite 340, Duluth MN 55802
TEL: (218) 724-8578 / FAX: (218) 724-8717
www.stanlusjohnson.com

MBJ CONSULTING ENG.
501 Lake Avenue South, Suite 300, Duluth MN 55802
TEL: (218) 722-1056 / FAX: (218) 722-9306
www.mbjeng.com

BNP ASSOCIATES INC.
14 Fairfield Drive Brookfield, CT 06804
TEL: (203) 792-3000 / FAX: (203) 792-4900
www.bnpassociates.com

COSENTINI
1 East Wacker Drive, Suite 103, Chicago IL 60601
TEL: (312) 670-1800 / FAX: (312) 670-1801
www.cosentini.com

APPOLD DESIGN
2432 East First Street, Duluth MN 55812
TEL: (218) 591-5079
www.appoloddesign.com

KRAUS-ANDERSON
3716 Oneota Street, Duluth MN 55807
TEL: (218) 722-3775
www.krausanderson.com

LIGHTING
XXXXXXXXXX
TEL: (XXX) XXX-XXXX
www.XXXXXXX.com

REVISIONS

	DESCRIPTION	DATE
-	-	-

DATE ISSUED: 04-05-2010
REVIEWED BY: BNP
DRAWN BY: KAS
DESIGNED BY: BNP

AEP PROJECT NUMBER
213-1882-091

© 2009 REYNOLDS, SMITH AND HILLS INC.

SHEET TITLE
BAGGAGE HANDLING SYSTEM TSA REIMBURSABLE PLAN

NO. SHEET NUMBER
B1001

90% NOT FOR CONSTRUCTION

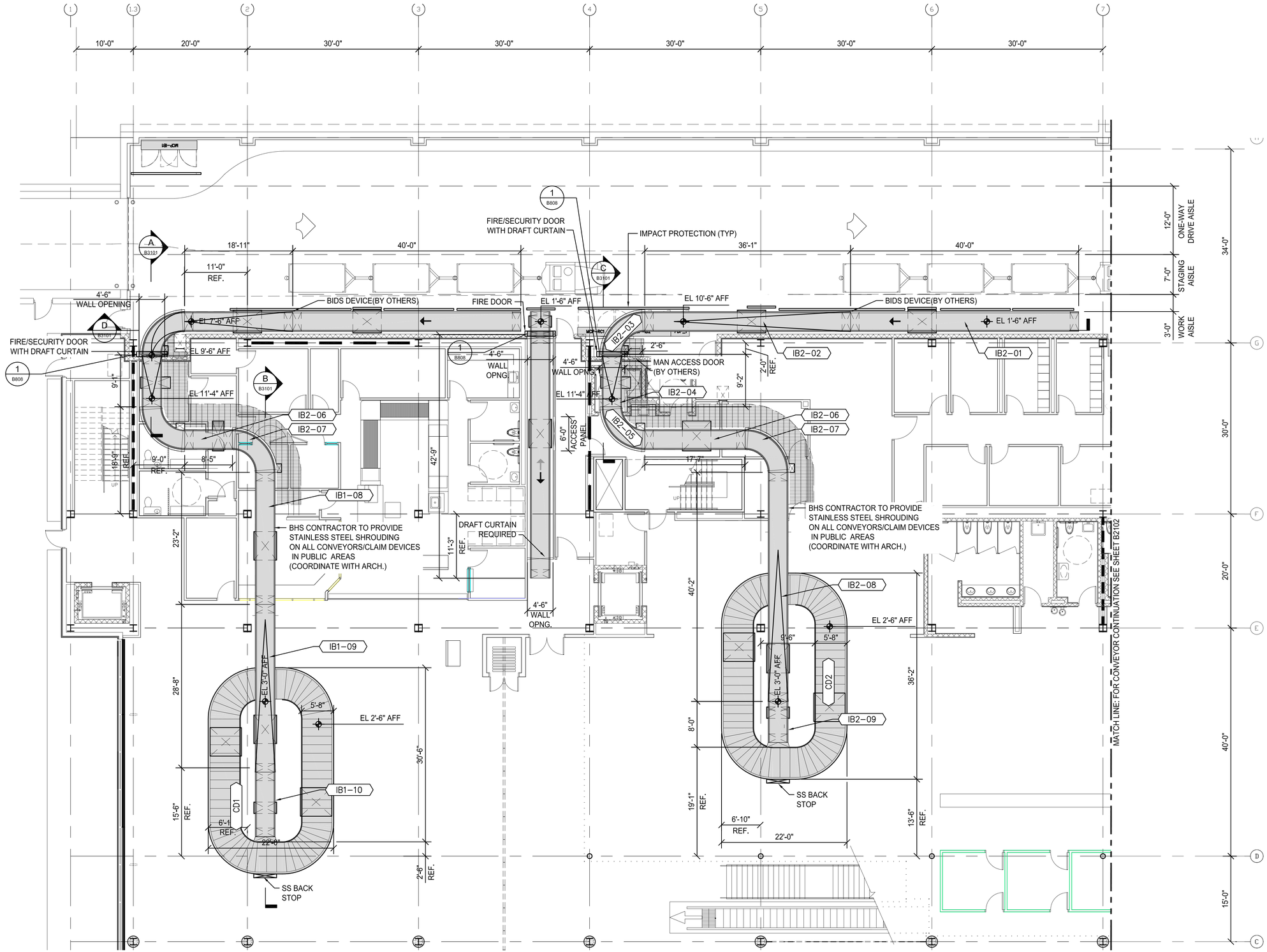

1 B2100 PARTIAL PLAN - INBOUND CLAIM HALL

1/8" = 1'-0"

RS&H

Architectural, Engineering, Planning and Environmental Services

Reynolds, Smith and Hills, Inc.
850 East Diehl Rd., Suite 120
Naperville, IL 60563
630-505-1991 FAX 630-505-1977
www.rsandh.com

DULUTH AIRPORT AUTHORITY

DULUTH INTERNATIONAL AIRPORT DULUTH, MN

NEW TERMINAL DESIGN

CONSULTANTS

SJA ARCHITECTS
11 E Superior Street Suite 340, Duluth MN 55802
TEL: (218) 724-8578 / FAX: (218) 724-8717
www.staniusjohnson.com

MBJ CONSULTING ENG.
501 Lake Avenue South, Suite 300, Duluth MN 55802
TEL: (218) 722-1056 / FAX: (218) 722-9306
www.mbjeng.com

BNP ASSOCIATES INC.
14 Fairfield Drive Brookfield, CT 06804
TEL: (203) 792-3000 / FAX: (203) 792-4900
www.bnpassociates.com

COSENTINI
1 East Wacker Drive, Suite 103, Chicago IL 60601
TEL: (312) 670-1800 / FAX: (312) 670-1801
www.cosentini.com

APPOLD DESIGN
2432 East First Street, Duluth MN 55812
TEL: (218) 591-5079
www.appoloddesign.com

KRAUS-ANDERSON
3716 Oneota Street, Duluth MN 55807
TEL: (218) 722-3775
www.krausanderson.com

LIGHTING
XXXXXXXXX
TEL: (XXX) XXX-XXXX
www.XXXXXXX.com

REVISIONS

	DESCRIPTION	DATE
-	-	-

DATE ISSUED: 04-05-2010
REVIEWED BY: BNP
DRAWN BY: RPE
DESIGNED BY: BNP

AEP PROJECT NUMBER
213-1882-091

© 2009 REYNOLDS, SMITH AND HILLS INC.

SHEET TITLE
BAGGAGE HANDLING SYSTEM PARTIAL PLAN CLAIM HALL

NO. SHEET NUMBER
B2101

90% NOT FOR CONSTRUCTION

$FILE$
$DATE TIME$

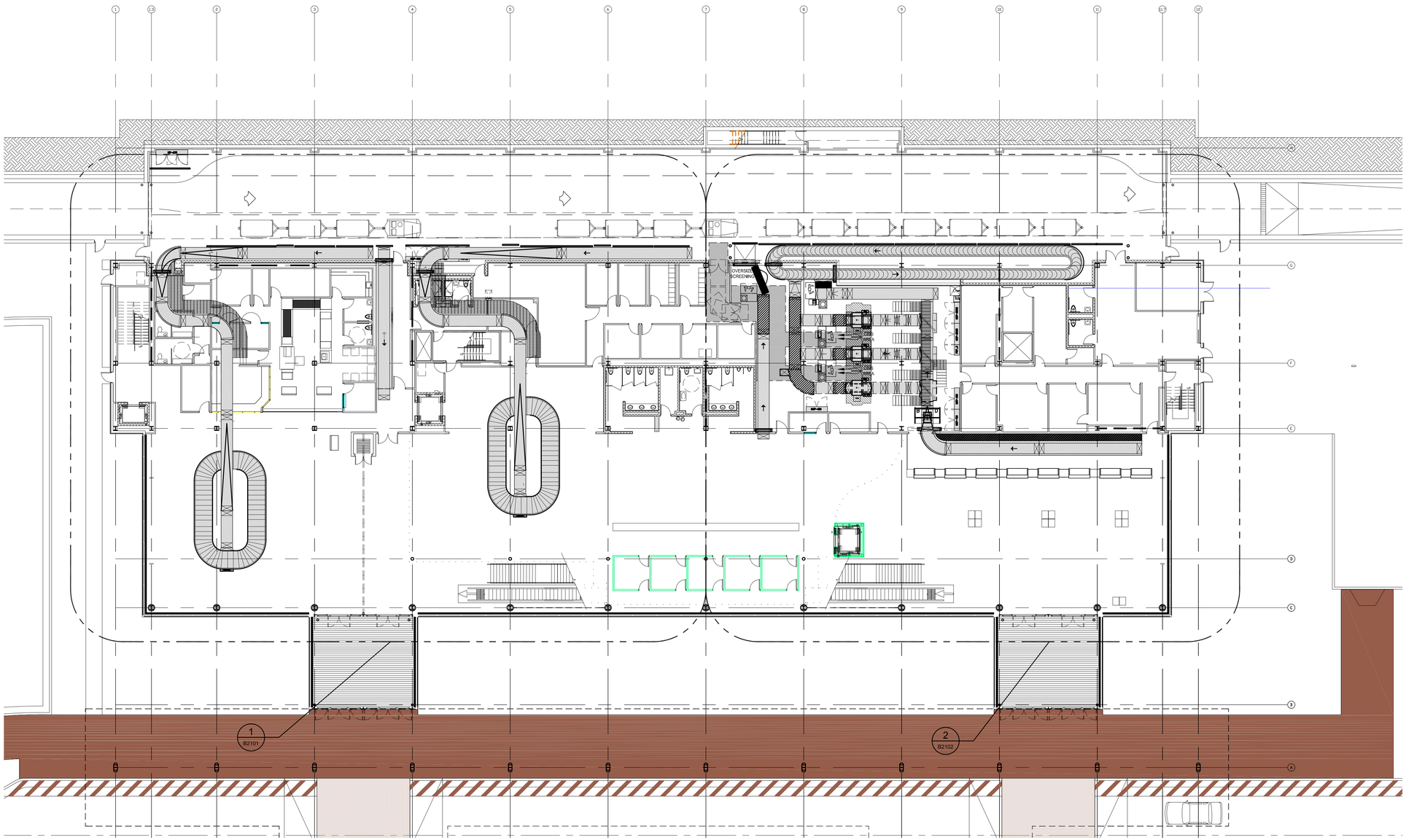

1 / B2100 OVERALL VIEW - KEY PLAN

1/16" = 1'-0"

RS&H

Architectural, Engineering, Planning and Environmental Services

Reynolds, Smith and Hills, Inc.
850 East Diehl Rd., Suite 120
Naperville, IL 60563
630-505-1991 FAX 630-505-1977
www.rsandh.com

DULUTH AIRPORT AUTHORITY

DULUTH INTERNATIONAL AIRPORT
DULUTH, MN

NEW TERMINAL DESIGN

CONSULTANTS

SJA ARCHITECTS
11 E Superior Street Suite 340, Duluth MN 55802
TEL: (218) 724-8578 / FAX: (218) 724-8717
www.stanlusjohnson.com

MBJ CONSULTING ENG.
501 Lake Avenue South, Suite 300, Duluth MN 55802
TEL: (218) 722-1056 / FAX: (218) 722-9306
www.mbjeng.com

BNP ASSOCIATES INC.
14 Fairfield Drive Brookfield, CT 06804
TEL: (203) 792-3000 / FAX: (203) 792-4900
www.bnpassociates.com

COSENTINI
1 East Wacker Drive, Suite 103, Chicago IL 60601
TEL: (312) 670-1800 / FAX: (312) 670-1801
www.cosentini.com

APPOLD DESIGN
2432 East First Street, Duluth MN 55812
TEL: (218) 591-5079
www.apploddesign.com

KRAUS-ANDERSON
3716 Oneota Street, Duluth MN 55807
TEL: (218) 722-3775
www.krausanderson.com

LIGHTING
XXXXXXXXXX
TEL: (XXX) XXX-XXXX
www.XXXXXXX.com

REVISIONS

	DESCRIPTION	DATE
-	-	-

DATE ISSUED: 04-05-2010
REVIEWED BY: BNP
DRAWN BY: KAS
DESIGNED BY: BNP

AEP PROJECT NUMBER
213-1882-091

© 2009 REYNOLDS, SMITH AND HILLS INC.

SHEET TITLE

BAGGAGE HANDLING SYSTEM GENERAL ARRANGEMENT

NO. SHEET NUMBER

B2100

90% NOT FOR CONSTRUCTION

$FILE$
$DATE TIME$

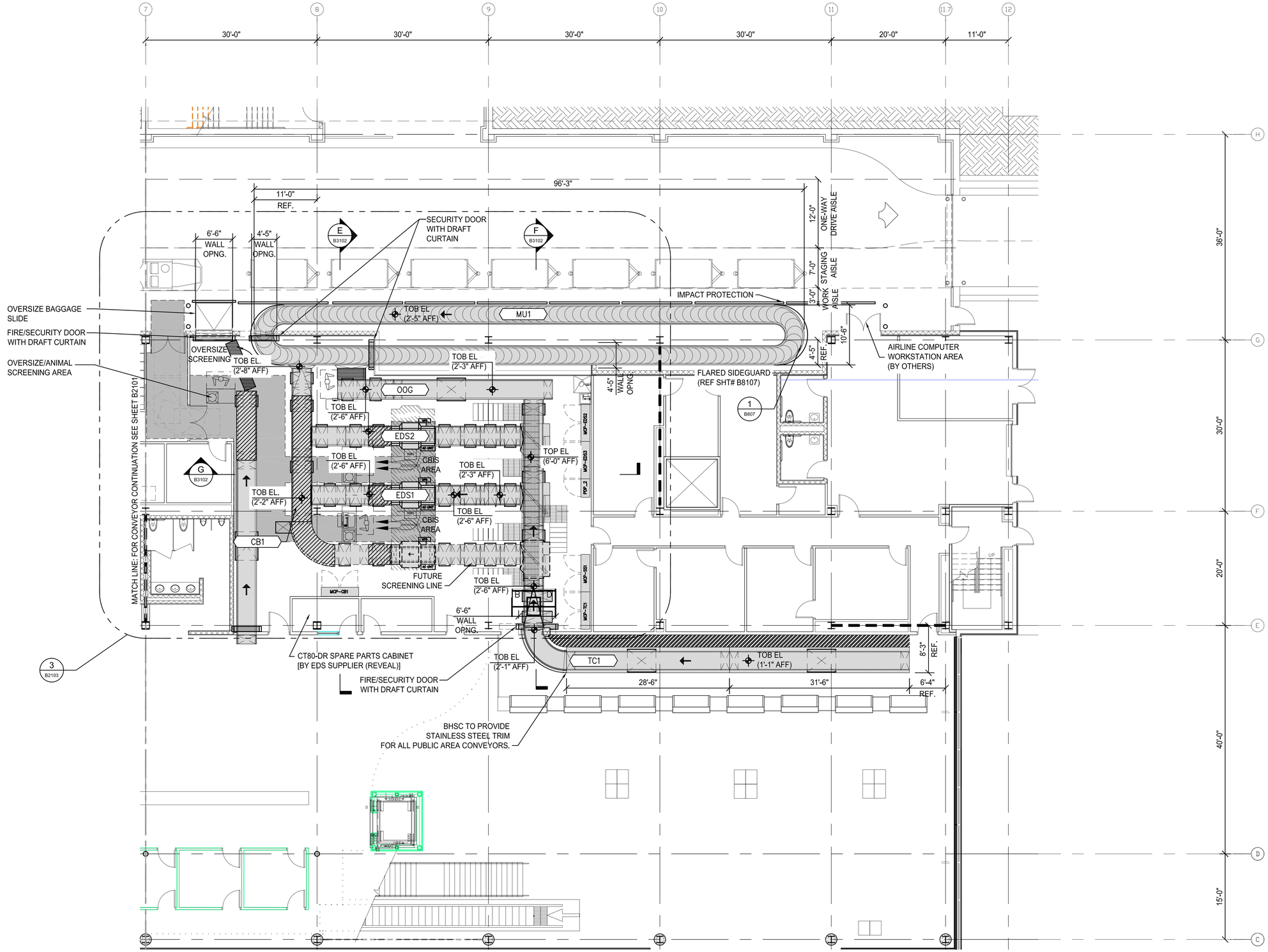

2 B2100 PARTIAL PLAN - TICKETING AND CBIS

1/8" = 1'-0"

RS&H
Architectural, Engineering, Planning and Environmental Services

Reynolds, Smith and Hills, Inc.
850 East Diehl Rd., Suite 120
Naperville, IL 60563
630-505-1991 FAX 630-505-1977
www.rsandh.com

DULUTH AIRPORT AUTHORITY

DULUTH INTERNATIONAL AIRPORT DULUTH, MN

NEW TERMINAL DESIGN

CONSULTANTS

SJA ARCHITECTS
11 E Superior Street Suite 340, Duluth MN 55802
TEL: (218) 724-8578 / FAX: (218) 724-8717
www.stanlusjohnson.com

MBJ CONSULTING ENG.
501 Lake Avenue South, Suite 300, Duluth MN 55802
TEL: (218) 722-1056 / FAX: (218) 722-9306
www.mbjeng.com

BNP ASSOCIATES INC.
14 Fairfield Drive Brookfield, CT 06804
TEL: (203) 792-3000 / FAX: (203) 792-4900
www.bnpassociates.com

COSENTINI
1 East Wacker Drive, Suite 103, Chicago IL 60601
TEL: (312) 670-1800 / FAX: (312) 670-1801
www.cosentini.com

APPOLD DESIGN
2432 East First Street, Duluth MN 55812
TEL: (218) 591-5079
www.appoloddesign.com

KRAUS-ANDERSON
3716 Oneota Street, Duluth MN 55807
TEL: (218) 722-3775
www.krausanderson.com

LIGHTING
XXXXXXXXX
TEL: (XXX) XXX-XXXX
www.XXXXXXX.com

REVISIONS

	DESCRIPTION	DATE
-	-	-

DATE ISSUED: 04-05-2010
REVIEWED BY: BNP
DRAWN BY: RPE
DESIGNED BY: BNP

AEP PROJECT NUMBER
213-1882-091

© 2009 REYNOLDS, SMITH AND HILLS INC.

SHEET TITLE
BAGGAGE HANDLING SYSTEM PARTIAL PLAN TICKETING AND CBIS

NO. SHEET NUMBER
B2102

90% NOT FOR CONSTRUCTION

$FILE$
$DATE TIME$

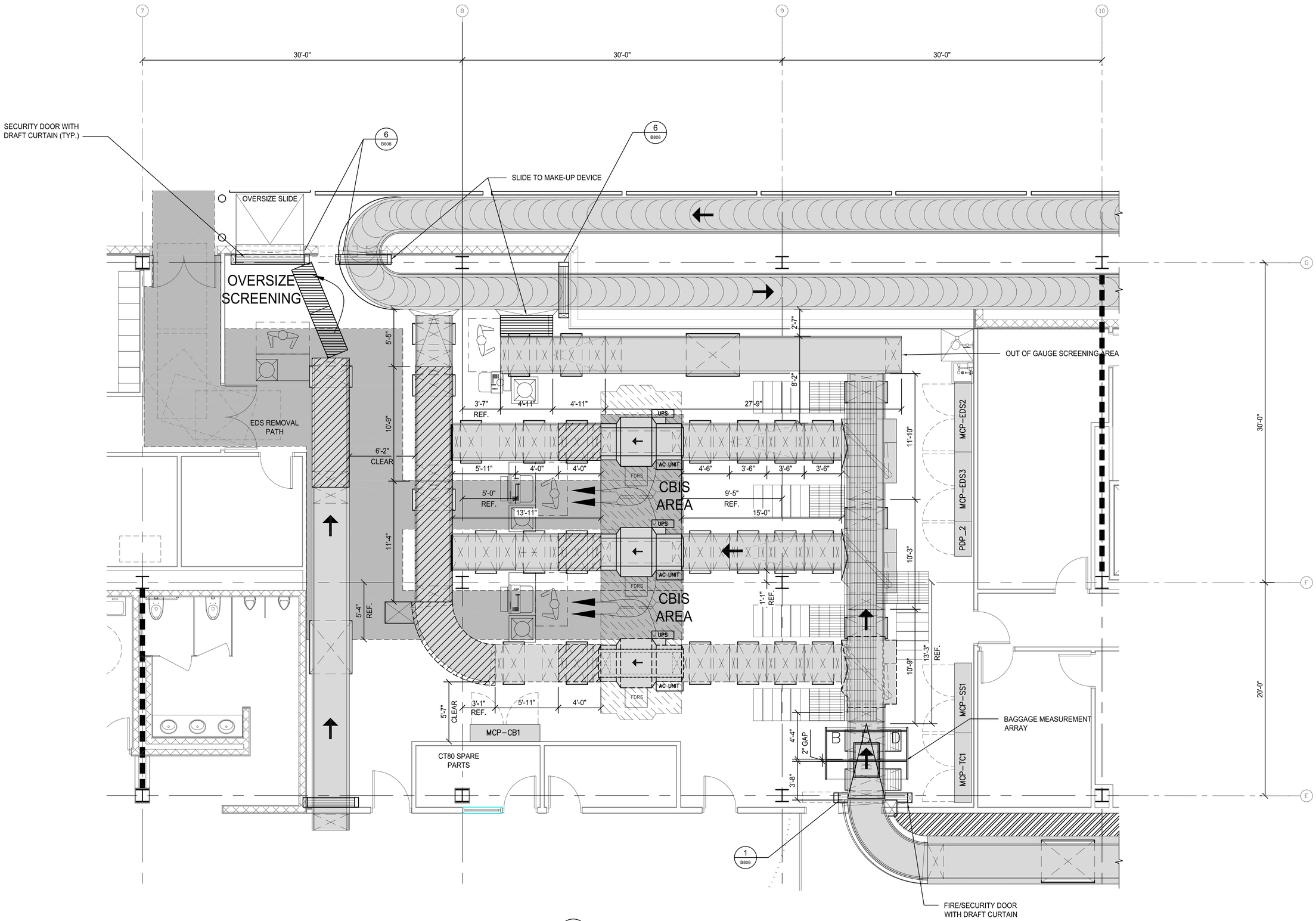

3 / B2102 CBIS-ENLARGED PLAN
1/4" = 1'-0"

RS&H
Architectural, Engineering, Planning and Environmental Services
Reynolds, Smith and Hills, Inc.
850 East Diehl Rd., Suite 120
Naperville, IL 60563
630-505-1991 FAX 630-505-1977
www.rsandh.com

DULUTH AIRPORT AUTHORITY

DULUTH INTERNATIONAL AIRPORT
DULUTH, MN

NEW TERMINAL DESIGN

CONSULTANTS

SJA ARCHITECTS
11 E Superior Street Suite 340, Duluth MN 55802
TEL: (218) 724-8578 / FAX: (218) 724-8717
www.stanlusjohnson.com

MBJ CONSULTING ENG.
501 Lake Avenue South, Suite 300, Duluth MN 55802
TEL: (218) 722-1056 / FAX: (218) 722-9306
www.mbjeng.com

BNP ASSOCIATES INC.
14 Fairfield Drive Brookfield, CT 06804
TEL: (203) 792-3000 / FAX: (203) 792-4900
www.bnpassociates.com

COSENTINI
1 East Wacker Drive, Suite 103, Chicago IL 60601
TEL: (312) 670-1800 / FAX: (312) 670-1801
www.cosentini.com

APPOLD DESIGN
2432 East First Street, Duluth MN 55812
TEL: (218) 591-5079
www.appoloddesign.com

KRAUS-ANDERSON
3716 Oneota Street, Duluth MN 55807
TEL: (218) 722-3775
www.krausanderson.com

LIGHTING
XXXXXXXXX
TEL: (XXX) XXX-XXXX
www.XXXXXXX.com

REVISIONS

	DESCRIPTION	DATE
-	-	-

DATE ISSUED: 04-05-2010
REVIEWED BY: BNP
DRAWN BY: RPE
DESIGNED BY: BNP

AEP PROJECT NUMBER
213-1882-091

© 2009 REYNOLDS, SMITH AND HILLS INC.

SHEET TITLE
BAGGAGE HANDLING SYSTEM CBIS ENLARGED PLAN

NO. SHEET NUMBER
B2103

90% NOT FOR CONSTRUCTION

$FILE$
$DATE TIME$

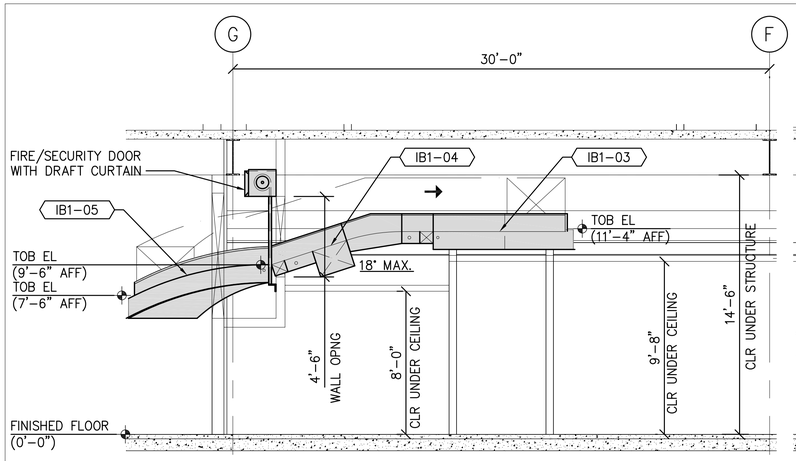

A B2101 SECTION - INBOUND CLAIM FEED AT FIRE WALL
1/4" = 1'-0"

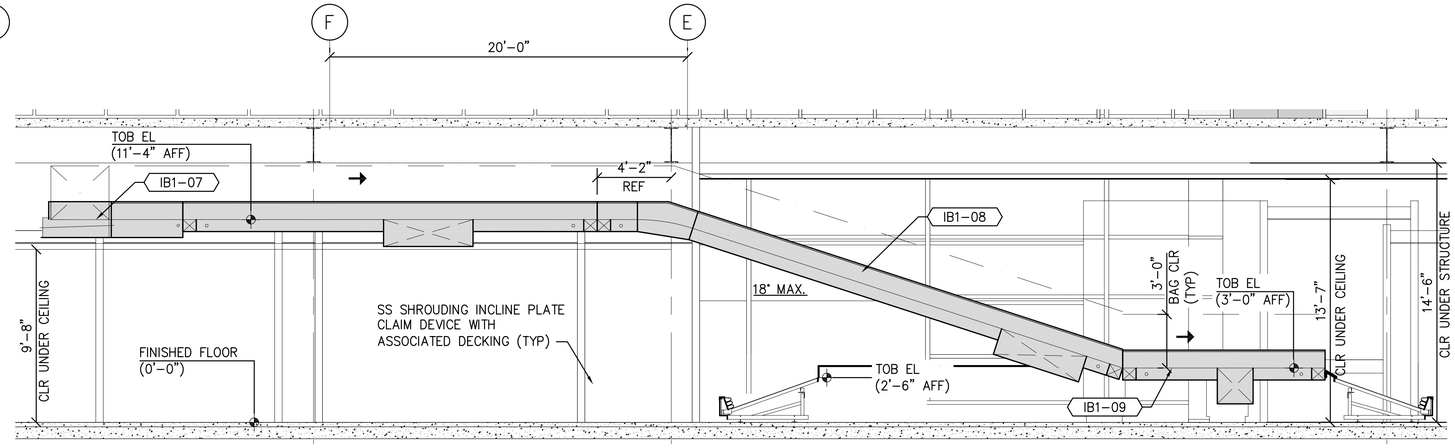

B B2101 SECTION - TYPICAL INBOUND CLAIM FEED IN CLAIM HALL
1/4" = 1'-0"

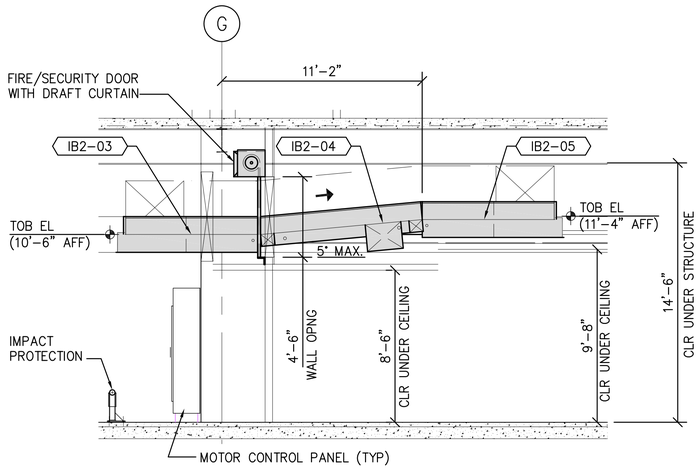

C B2101 SECTION - INBOUND CLAIM FEED AT FIRE WALL
1/4" = 1'-0"

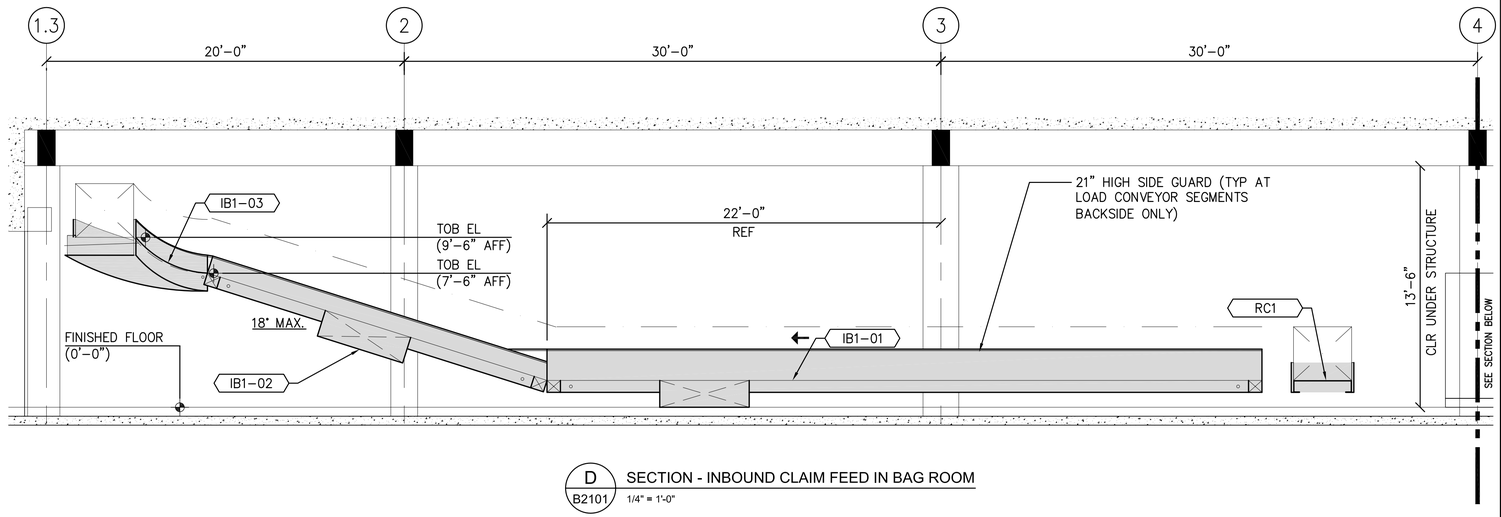

D B2101 SECTION - INBOUND CLAIM FEED IN BAG ROOM
1/4" = 1'-0"

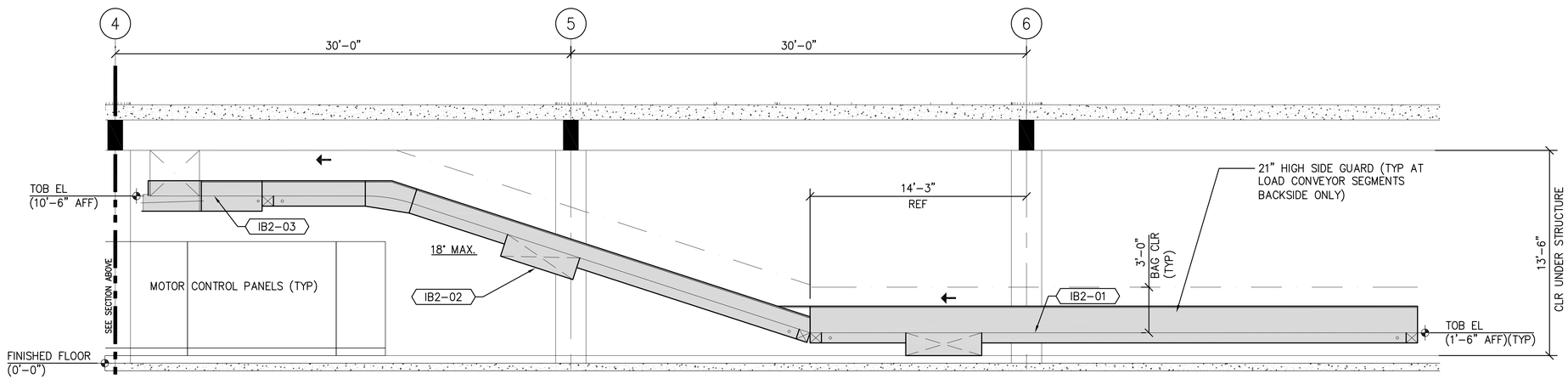

D B2101 SECTION CONTINUED - INBOUND CLAIM FEED IN BAG ROOM
1/4" = 1'-0"

RS&H
Architectural, Engineering, Planning and Environmental Services
Reynolds, Smith and Hills, Inc.
850 East Diehl Rd., Suite 120
Naperville, IL 60563
630-505-1991 FAX 630-505-1977
www.rsandh.com

DULUTH AIRPORT AUTHORITY

DULUTH INTERNATIONAL AIRPORT
DULUTH, MN

NEW TERMINAL DESIGN

CONSULTANTS

SJA ARCHITECTS
11 E Superior Street Suite 340, Duluth MN 55802
TEL: (218) 724-8578 / FAX: (218) 724-8717
www.stanlusjohnson.com

MBJ CONSULTING ENG.
501 Lake Avenue South, Suite 300, Duluth MN 55802
TEL: (218) 722-1056 / FAX: (218) 722-9306
www.mbjeng.com

BNP ASSOCIATES INC.
14 Fairfield Drive Brookfield, CT 06804
TEL: (203) 792-3000 / FAX: (203) 792-4900
www.bnpassociates.com

COSENTINI
1 East Wacker Drive, Suite 103, Chicago IL 60601
TEL: (312) 670-1800 / FAX: (312) 670-1801
www.cosentini.com

APPOLD DESIGN
2432 East First Street, Duluth MN 55812
TEL: (218) 591-5079
www.appoloddesign.com

KRAUS-ANDERSON
3716 Oneota Street, Duluth MN 55807
TEL: (218) 722-3775
www.krausanderson.com

LIGHTING
XXXXXXXXX
TEL: (XXX) XXX-XXXX
www.XXXXXXX.com

REVISIONS

	DESCRIPTION	DATE
-	-	-

DATE ISSUED: 04-05-2010
REVIEWED BY: BNP
DRAWN BY: BGP
DESIGNED BY: BNP

AEP PROJECT NUMBER
213-1882-091

© 2009 REYNOLDS, SMITH AND HILLS INC.

SHEET TITLE
BAGGAGE HANDLING SYSTEM SECTIONS

NO. SHEET NUMBER
B3101

90% NOT FOR CONSTRUCTION

$FILE$
$DATE TIME$

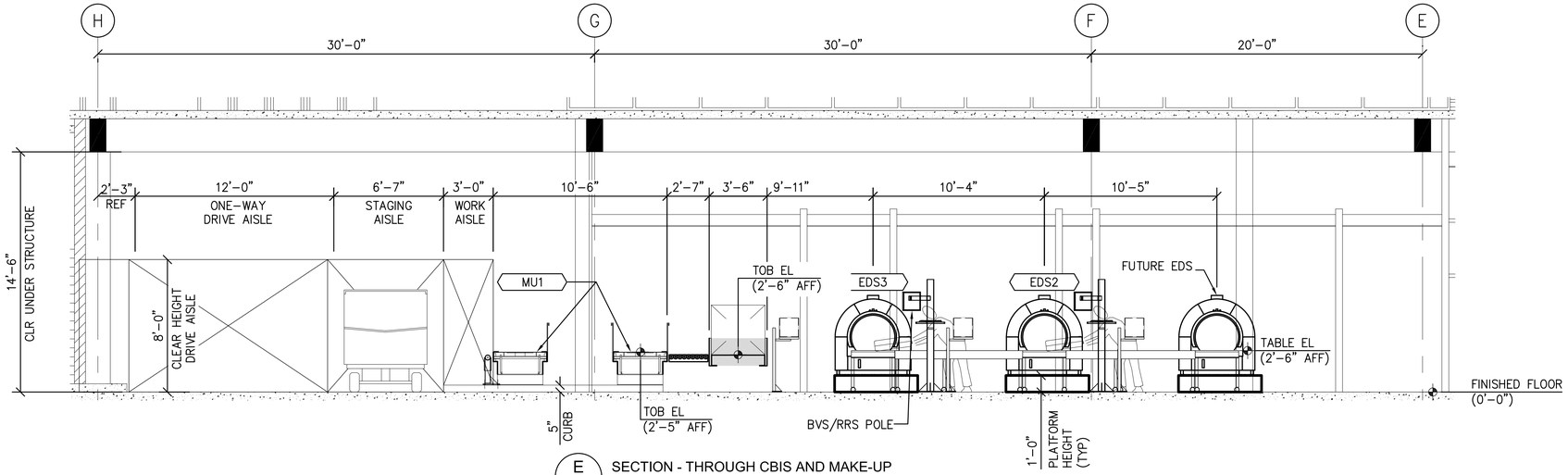

E B2102 SECTION - THROUGH CBIS AND MAKE-UP
1/4" = 1'-0"

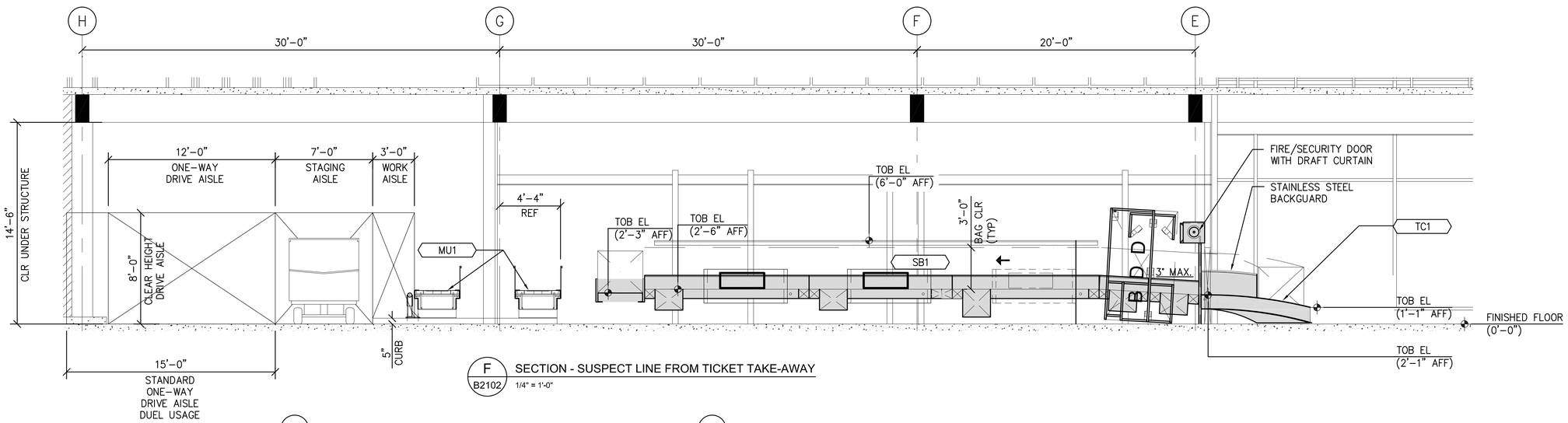

F B2102 SECTION - SUSPECT LINE FROM TICKET TAKE-AWAY
1/4" = 1'-0"

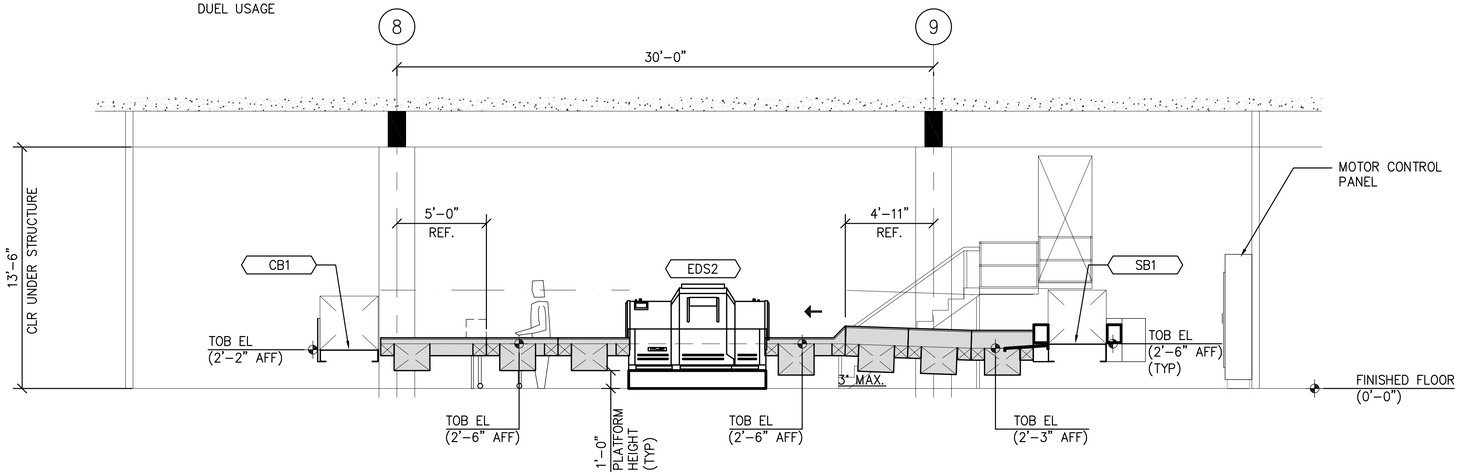

G B2102 SECTION - SUSPECT SCREENING LINE WITH TSA WALKWAY
1/4" = 1'-0"

RS&H
Architectural, Engineering, Planning and Environmental Services

Reynolds, Smith and Hills, Inc.
850 East Diehl Rd., Suite 120
Naperville, IL 60563
630-505-1991 FAX 630-505-1977
www.rsandh.com

DULUTH AIRPORT AUTHORITY

DULUTH INTERNATIONAL AIRPORT
DULUTH, MN

NEW TERMINAL DESIGN

CONSULTANTS

SJA ARCHITECTS
11 E Superior Street Suite 340, Duluth MN 55802
TEL: (218) 724-8578 / FAX: (218) 724-8717
www.stanlusjohnson.com

MBJ CONSULTING ENG.
501 Lake Avenue South, Suite 300, Duluth MN 55802
TEL: (218) 722-1056 / FAX: (218) 722-9306
www.mbjeng.com

BNP ASSOCIATES INC.
14 Fairfield Drive Brookfield, CT 06804
TEL: (203) 792-3000 / FAX: (203) 792-4900
www.bnpassociates.com

COSENTINI
1 East Wacker Drive, Suite 103, Chicago IL 60601
TEL: (312) 670-1800 / FAX: (312) 670-1801
www.cosentini.com

APPOLD DESIGN
2432 East First Street, Duluth MN 55812
TEL: (218) 591-5079
www.appoldesign.com

KRAUS-ANDERSON
3716 Oneota Street, Duluth MN 55807
TEL: (218) 722-3775
www.krausanderson.com

LIGHTING
XXXXXXXX
TEL: (XXX) XXX-XXXX
www.XXXXXXX.com

REVISIONS

	DESCRIPTION	DATE
-	-	-

DATE ISSUED: 04-05-2010
REVIEWED BY: BNP
DRAWN BY: RPE
DESIGNED BY: BNP

AEP PROJECT NUMBER
213-1882-091

© 2009 REYNOLDS, SMITH AND HILLS INC.

SHEET TITLE
BAGGAGE HANDLING SYSTEM SECTIONS

NO. SHEET NUMBER
B3102

90% NOT FOR CONSTRUCTION

$FILE$
$DATE TIME$

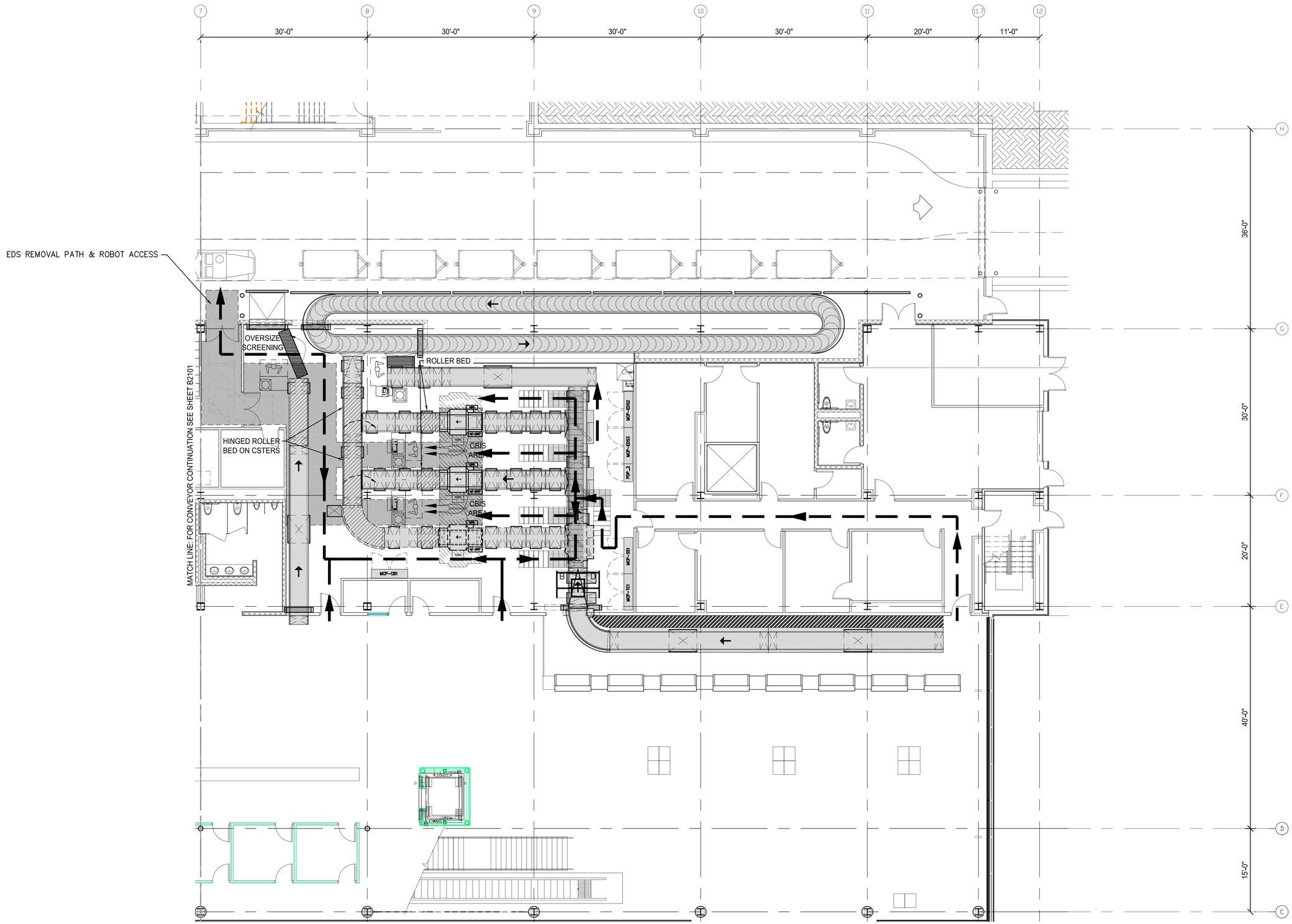

1 / B6102 BAGGAGE HANDLING SYSTEM CBIS TSA EGRESS PATH

1/8" = 1'-0"

RS&H®
Architectural, Engineering, Planning and Environmental Services

Reynolds, Smith and Hills, Inc.
850 East Diehl Rd., Suite 120
Naperville, IL 60563
630-505-1991 FAX 630-505-1977
www.rsandh.com

DULUTH AIRPORT AUTHORITY

DULUTH INTERNATIONAL AIRPORT
DULUTH, MN

NEW TERMINAL DESIGN

CONSULTANTS

SJA ARCHITECTS
11 E Superior Street Suite 340, Duluth MN 55802
TEL: (218) 724-8578 / FAX: (218) 724-8717
www.staniusjohnson.com

MBJ CONSULTING ENG.
501 Lake Avenue South, Suite 300, Duluth MN 55802
TEL: (218) 722-1056 / FAX: (218) 722-9306
www.mbjeng.com

BNP ASSOCIATES INC.
14 Fairfield Drive Brookfield, CT 06804
TEL: (203) 792-3000 / FAX: (203) 792-4900
www.bnpassociates.com

COSENTINI
1 East Wacker Drive, Suite 103, Chicago IL 60601
TEL: (312) 670-1800 / FAX: (312) 670-1801
www.cosentini.com

APPOLD DESIGN
2432 East First Street, Duluth MN 55812
TEL: (218) 591-5079
www.appoloddesign.com

KRAUS-ANDERSON
3716 Oneota Street, Duluth MN 55807
TEL: (218) 722-3775
www.krausanderson.com

LIGHTING
XXXXXXXXX
TEL: (XXX) XXX-XXXX
www.XXXXXXX.com

REVISIONS

	DESCRIPTION	DATE
-	-	-

DATE ISSUED: 04-05-2010
REVIEWED BY:
DRAWN BY:
DESIGNED BY:

AEP PROJECT NUMBER
213-1882-091

© 2009 REYNOLDS, SMITH AND HILLS INC.

SHEET TITLE
BAGGAGE HANDLING SYSTEM CBIS TSA EGRESS PATH

NO. SHEET NUMBER
B6102

90% NOT FOR CONSTRUCTION

$FILE$
$DATE TIME$

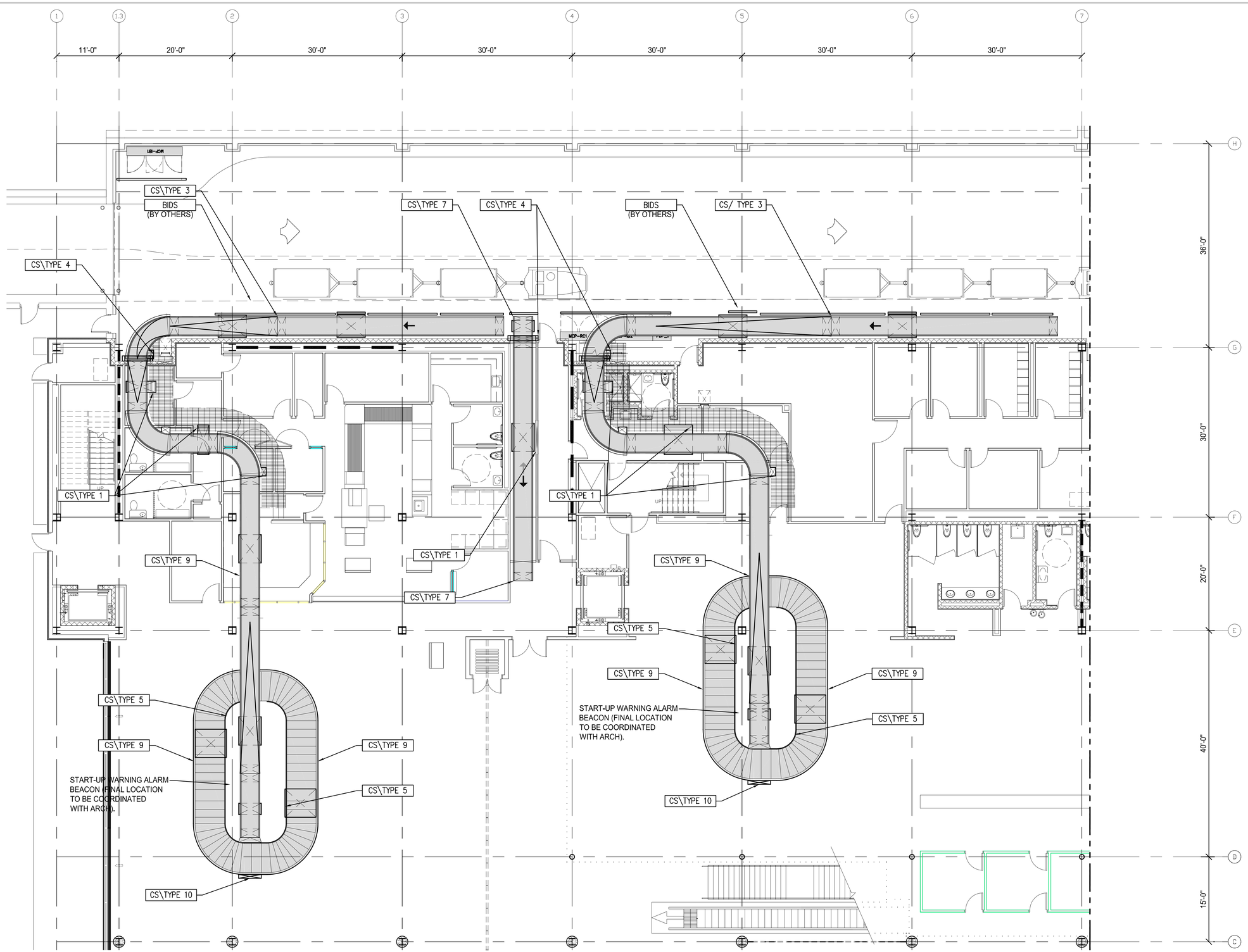

1 B2100 PARTIAL PLAN - INBOUND CLAIM HALL

1/8" = 1'-0"

RS&H

Architectural, Engineering, Planning and Environmental Services

Reynolds, Smith and Hills, Inc.
850 East Diehl Rd., Suite 120
Naperville, IL 60563
630-505-1991 FAX 630-505-1977
www.rsandh.com

DULUTH AIRPORT AUTHORITY

DULUTH INTERNATIONAL AIRPORT
DULUTH, MN

NEW TERMINAL DESIGN

CONSULTANTS

SJA ARCHITECTS
11 E Superior Street Suite 340, Duluth MN 55802
TEL: (218) 724-8578 / FAX: (218) 724-8717
www.staniusjohnson.com

MBJ CONSULTING ENG.
501 Lake Avenue South, Suite 300, Duluth MN 55802
TEL: (218) 722-1056 / FAX: (218) 722-9306
www.mbjeng.com

BNP ASSOCIATES INC.
14 Fairfield Drive Brookfield, CT 06804
TEL: (203) 792-3000 / FAX: (203) 792-4900
www.bnpassociates.com

COSENTINI
1 East Wacker Drive, Suite 103, Chicago IL 60601
TEL: (312) 670-1800 / FAX: (312) 670-1801
www.cosentini.com

APPOLD DESIGN
2432 East First Street, Duluth MN 55812
TEL: (218) 591-5079
www.apploddesign.com

KRAUS-ANDERSON
3716 Oneota Street, Duluth MN 55807
TEL: (218) 722-3775
www.krausanderson.com

LIGHTING
XXXXXXXXX
TEL: (XXX) XXX-XXXX
www.XXXXXXX.com

REVISIONS

	DESCRIPTION	DATE
-	-	-

DATE ISSUED: 04-05-2010
REVIEWED BY: BNP
DRAWN BY: RPE
DESIGNED BY: BNP

AEP PROJECT NUMBER
213-1882-091

© 2009 REYNOLDS, SMITH AND HILLS INC.

SHEET TITLE
BAGGAGE HANDLING SYSTEM
CLAIM CONTROL STATION
LAYOUT

NO. SHEET NUMBER
B7101

90% NOT FOR CONSTRUCTION

$FILE$
$DATE TIME$

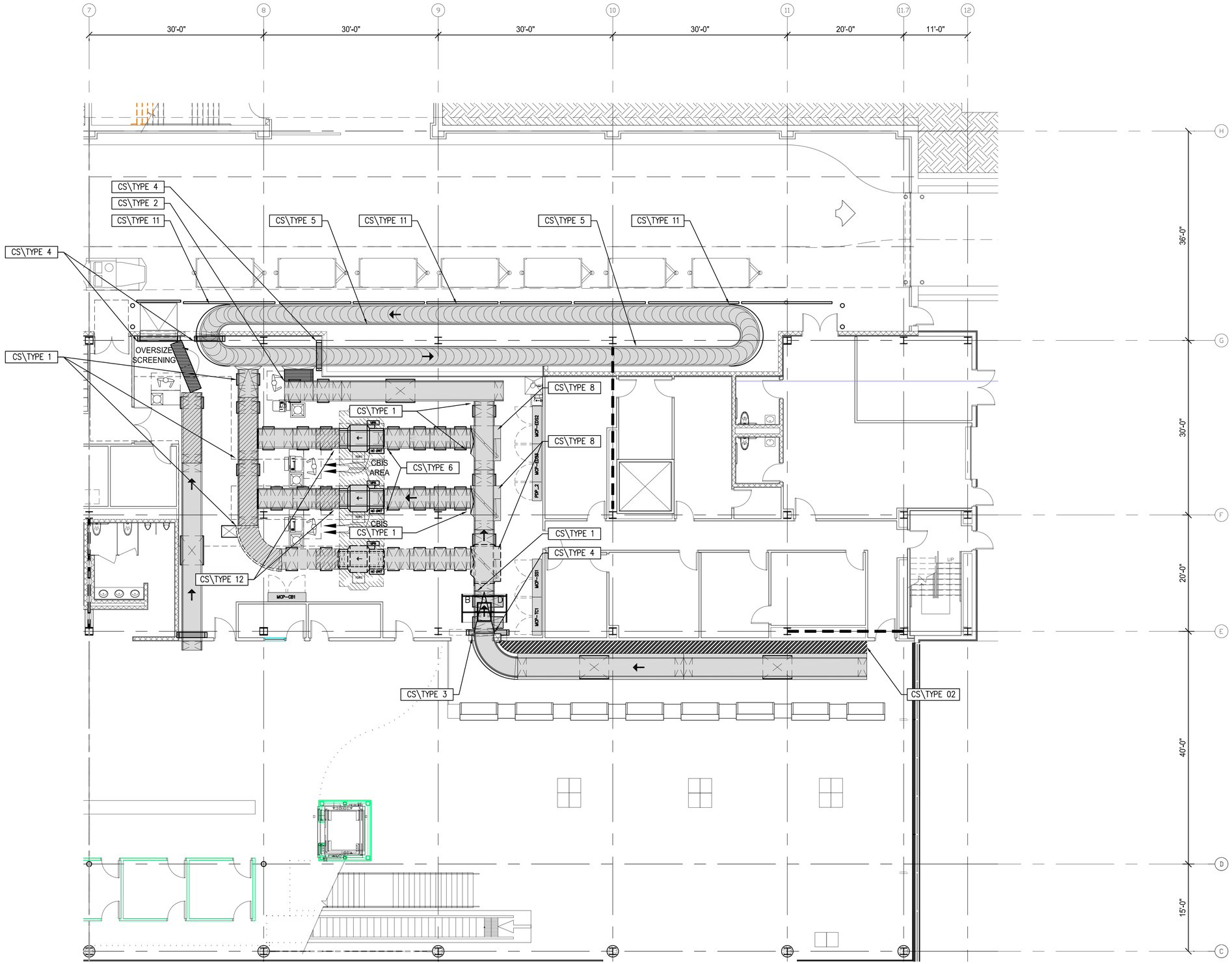

1 B7102 PARTIAL PLAN - TICKETING AND CBIS CONTROL STATION LAYOUT

1/8" = 1'-0"

$FILE$
$DATE TIME$

RS&H

Architectural, Engineering, Planning and Environmental Services

Reynolds, Smith and Hills, Inc.
850 East Diehl Rd., Suite 120
Naperville, IL 60563
630-505-1991 FAX 630-505-1977
www.rsandh.com

DULUTH AIRPORT AUTHORITY

DULUTH INTERNATIONAL AIRPORT
DULUTH, MN

NEW TERMINAL DESIGN

CONSULTANTS

SJA ARCHITECTS
11 E Superior Street Suite 340, Duluth MN 55802
TEL: (218) 724-8578 / FAX: (218) 724-8717
www.staniusjohnson.com

MBJ CONSULTING ENG.
501 Lake Avenue South, Suite 300, Duluth MN 55802
TEL: (218) 722-1056 / FAX: (218) 722-9306
www.mbjeng.com

BNP ASSOCIATES INC.
14 Fairfield Drive Brookfield, CT 06804
TEL: (203) 792-3000 / FAX: (203) 792-4900
www.bnpassociates.com

COSENTINI
1 East Wacker Drive, Suite 103, Chicago IL 60601
TEL: (312) 670-1800 / FAX: (312) 670-1801
www.cosentini.com

APPOLD DESIGN
2432 East First Street, Duluth MN 55812
TEL: (218) 591-5079
www.appoloddesign.com

KRAUS-ANDERSON
3716 Oneota Street, Duluth MN 55807
TEL: (218) 722-3775
www.krausanderson.com

LIGHTING
XXXXXXXXX
TEL: (XXX) XXX-XXXX
www.XXXXXXX.com

REVISIONS

	DESCRIPTION	DATE
-	-	-

DATE ISSUED: 04-05-2010
REVIEWED BY: BNP
DRAWN BY: RPE
DESIGNED BY: BNP

AEP PROJECT NUMBER
213-1882-091

© 2009 REYNOLDS, SMITH AND HILLS INC.

SHEET TITLE
BAGGAGE HANDLING SYSTEM CBIS CONTROL STATION LAYOUT

NO. SHEET NUMBER
B7102

90% NOT FOR CONSTRUCTION

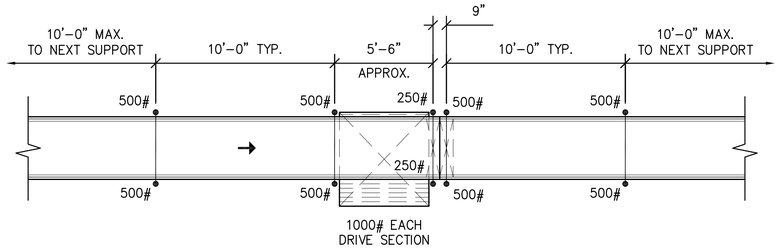

1 B8101 DETAIL PLAN - SINGLE LEVEL CONVEYOR SUPPORT LOADS

1/4" = 1'-0"

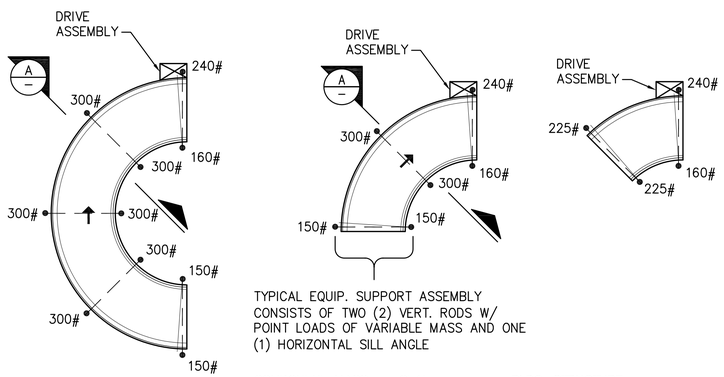

TYPICAL EQUIP. SUPPORT ASSEMBLY CONSISTS OF TWO (2) VERT. RODS W/ POINT LOADS OF VARIABLE MASS AND ONE (1) HORIZONTAL SILL ANGLE

COMPONENT MASS – TOTAL
45° POWER TURN = 850 LBS.
90° POWER TURN = 1300 LBS.
180° POWER TURN = 2500 LBS.

2 B8101 DETAIL PLAN - POWER TURNS STANDARD SUPPORT LOADS

1/4" = 1'-0"

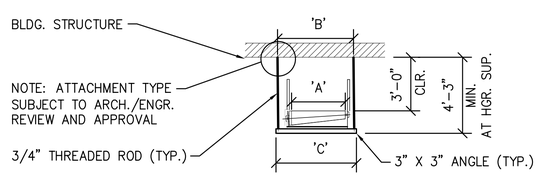

A B8101 DETAIL SECTION - POWER TURN STANDARD SUPPORT LOADS

1/4" = 1'-0"

BAGGAGE CONVEYOR LOADS:

1. THE CONVEYOR ATTACHMENT METHODS REPRESENTED ON THESE DRAWINGS ARE FOR REFERENCE ONLY. THE BAGGAGE HANDLING SYSTEM CONTRACTOR IS REQUIRED TO SUBMIT CONVEYOR ATTACHMENT DETAILS INCLUDING LOADING CALCULATIONS BY A REGISTERED P.E. TO THE OWNER FOR REVIEW AND APPROVAL PRIOR TO COMMENCEMENT OF INSTALLATION.
2. ALL STRUCTURAL DESIGNS AND ATTACHMENTS SHALL COMPLY WITH ALL STATE, LOCAL AND NATIONAL GOVERNING CODES AND REGULATIONS. ALL CONVEYOR EQUIPMENT SHALL BE CAPABLE OF SUPPORTING A SINGLE CONCENTRATED LOAD OF 250 LBS.
3. THE CONTRACTOR SHALL INCLUDE VIBRATION ISOLATORS AS PART OF THE BASE BID. THE CONTRACTOR SHALL IDENTIFY A UNIT COST TO ADD INDIVIDUAL VIBRATION ISOLATORS TO SELECTED CONVEYORS DURING THE ENGINEERING PHASE. THE LIVE LOAD TO BE UTILIZED FOR SIZING DRIVES, BELTS, BEARINGS, ETC., SHALL BE 60 LBS/LIN. FT. FOR LOAD–ACCUMULATING CONVEYORS AND RUN–OUT CONVEYORS, 40 LBS/LIN FT. AT A CONVEYOR SPEED OF 90 FPM ADJUSTED PROPORTIONAL TO SPEED OF ALL OTHER CONVEYORS.

BHS SUPPORT ATTACHMENT:

1. WHEN CONNECTING TO BUILDING STEEL USE BEAM CLAMPS SIZED FOR THE BOTTOM FLANGE OF THE BEAM. USE A (MIN.) 3/4" DIA. THREADED ROD FOR HANGING SUPPORT.
2. WHEN CONNECTING TO THE CONCRETE STRUCTURE USE EITHER A HILTI "KWIK BOLT" OR RAWLING "RAWL–STUD" IN SHEAR FOLLOWS. 1000 LBS LOAD USE MIN. 3/8" DIA. WITH 2–1/2" EMBEDMENT (MIN) 1500 LBS LOAD USE MIN. 1/2" DIA. WITH 3–1/2" EMBEDMENT (MIN) 2000 LBS LOAD USE MIN. 5/8" DIA. WITH 4" EMBEDMENT (MIN) MIN. SPACING 4" WITH 8" EDGE DISTANCE.

MAINTENANCE PLATFORM GENERAL NOTES:

1. THE MAINTENANCE PLATFORMS AND WALKWAYS THAT ARE SHOWN ON THESE DRAWINGS ARE INTENDED AS TYPICAL SCHEMATIC EXAMPLES OF WHERE PLATFORMS AND WALKWAYS ARE TO BE PROVIDED AND THE APPROXIMATE CONFIGURATION.
2. PROVIDE AND INSTALL MAINTENANCE PLATFORMS FOR MAINTENANCE PERSONNEL ACCESS TO THE ENTIRE BAGGAGE HANDLING SYSTEM AT ALL MAINTENANCE POINTS AND POTENTIAL BAGGAGE JAM LOCATIONS. PROVIDE AND INSTALL LADDERS TO ALLOW ACCESS TO ALL PLATFORMS.
3. SYSTEM MAINTENANCE POINTS INCLUDE BUT ARE NOT LIMITED TO:
   a. ALL MOTOR/DRIVE LOCATIONS
   b. ALL RETURN ROLLER LOCATIONS
4. POTENTIAL BAGGAGE JAM LOCATIONS INCLUDE BUT ARE NOT LIMITED TO:
   a. ALL ENTRANCE AND EXIT POINTS ON POWER TURNS
   b. ALL SEPARATIONS BETWEEN CONVEYORS (HEAD AND TAIL ENDS)
5. REFER TO SPECIFICATION FOR MAINTENANCE PLATFORMS AND WALKWAYS REQUIREMENTS AND CRITERIA.

LOADING DIAGRAM NOTES:

1. DURING THE DETAIL DESIGN PERIOD, THE FOLLOWING LOADS WERE SUPPLIED TO THE STRUCTURAL ENGINEER FOR USE IN DETERMINING THE LOADS GENERATED BY THE CONVEYOR EQUIPMENT (STATIC AND DYNAMIC COMBINED). DURING THE BIDDING PERIOD, PROVIDE AND CLEARLY IDENTIFY ANY CONVEYOR EQUIPMENT LOADING REQUIREMENTS MORE STRINGENT THAN WHAT IS SHOWN IN THESE DOCUMENTS THAT MAY BE ESSENTIAL FOR EQUIPMENT CONNECTIONS TO THE BUILDING STRUCTURE.
2. THE CONVEYOR SUPPORT POINT LOADING PLACEMENT AND CONFIGURATION SHOWN IS REPRESENTATIVE OF ONE POSSIBLE CONFIGURATION. THIS DIAGRAMMATIC VIEW IS PROVIDED FOR USE BY THE STRUCTURAL ENGINEER IN DETERMINING ALL LOADS IMPOSED BY THE NEW BAGGAGE EQUIPMENT AND ASSOCIATED SERVICES. OTHER CONFIGURATIONS MAY BE PROVIDED.
3. PROVISION OF THE BAGGAGE EQUIPMENT CONTRACTOR SHALL PROVIDE SPECIFIC DETAIL SUPPORT DESIGN FOR ALL BUILDING STRUCTURE CONNECTIONS AND ALL VERTICAL SUPPORT MEMBER CONNECTIONS TO FLOOR SLAB AND BUILDING STRUCTURE.
4. THE FINAL STRUCTURAL SUPPORT DESIGN SOLUTION IS THE RESPONSIBILITY OF THE BAGGAGE EQUIPMENT CONTRACTOR AND SHALL BE COORDINATED WITH AND APPROVED BY THE BHS CONTRACTOR'S PROFESSIONAL PROJECT ENGINEER.
5. THE BAGGAGE EQUIPMENT SUPPLIER IS RESPONSIBLE FOR THE DESIGN AND STRUCTURAL INTEGRITY OF ALL BOLTS, HANGERS, SUPPORT MEMBERS, ETC., AND IS TO PROVIDE ALL NECESSARY MATERIALS REQUIRED FOR INSTALLATION.

SYMBOL	DESCRIPTION
•— — —•	CEILING–SUPPORTED CONVEYOR SILL ASSEMBLY (TYP. +7'–6" AND ABOVE)
•———•	FLOOR–SUPPORTED CONVEYOR PEDESTAL ASSEMBLY (TYP. +7'–6" AND BELOW)
•	CONCENTRATED POINT LOAD (AT SUPPORT LOCATIONS)

NOTE:
THE POINT LOADS REPRESENTED ARE BASED ON COMPOSITE MASS OF CONVEYOR EQUIPMENT ONLY.

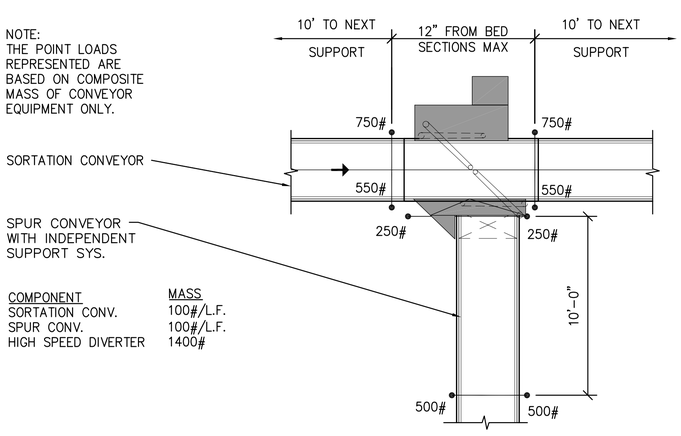

COMPONENT	MASS
SORTATION CONV.	100#/L.F.
SPUR CONV.	100#/L.F.
HIGH SPEED DIVERTER	1400#

3 B8101 DETAIL PLAN - HIGH SPEED DIVERTER WITH TAKE AWAY CONVEYOR LOADS

1/4" = 1'-0"

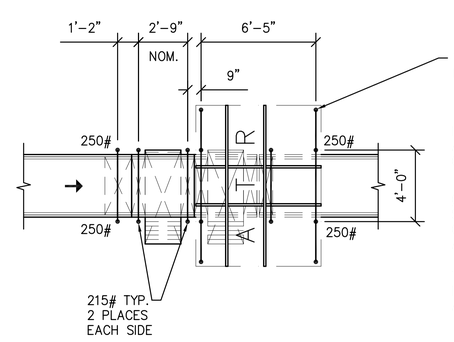

NOTE: THE POINT LOADS REPRESENTED ARE BASED ON COMPOSITE MASS OF CONVEYOR EQUIPMENT ONLY.

COMPONENT	MASS
SORTATION CONVEYOR:	100#/LF
QUEUE CONVEYOR:	800#/LF
AUTOMATIC TAG READER:	500# EA

THE TAG READER MAINTENANCE PLATFORM SHALL PROVIDE FOR AN ASSUMED LIVE LOAD OF 500#.

4 B8101 DETAIL PLAN - BDD & LASER SCANNER ARRAY STANDARD SUPPORT LOADS

1/4" = 1'-0"

RS&H
Architectural, Engineering, Planning and Environmental Services
Reynolds, Smith and Hills, Inc.
850 East Diehl Rd., Suite 120
Naperville, IL 60563
630–505–1991 FAX 630–505–1977
www.rsandh.com

DULUTH AIRPORT AUTHORITY

DULUTH INTERNATIONAL AIRPORT
DULUTH, MN

NEW TERMINAL DESIGN

CONSULTANTS

SJA ARCHITECTS
11 E Superior Street Suite 340, Duluth MN 55802
TEL: (218) 724-8578 / FAX: (218) 724-8717
www.staniusjohnson.com

MBJ CONSULTING ENG.
501 Lake Avenue South, Suite 300, Duluth MN 55802
TEL: (218) 722-1056 / FAX: (218) 722-9306
www.mbjeng.com

BNP ASSOCIATES INC.
14 Fairfield Drive Brookfield, CT 06804
TEL: (203) 792-3000 / FAX: (203) 792-4900
www.bnpassociates.com

COSENTINI
1 East Wacker Drive, Suite 103, Chicago IL 60601
TEL: (312) 670-1800 / FAX: (312) 670-1801
www.cosentini.com

APPOLD DESIGN
2432 East First Street, Duluth MN 55812
TEL: (218) 591-5079
www.appoldesign.com

KRAUS-ANDERSON
3716 Oneota Street, Duluth MN 55807
TEL: (218) 722-3775
www.krausanderson.com

LIGHTING
XXXXXXXXX
TEL: (XXX) XXX-XXXX
www.XXXXXXX.com

REVISIONS

	DESCRIPTION	DATE
-	-	-

DATE ISSUED: 04–05–2010
REVIEWED BY: BNP
DRAWN BY: KAS
DESIGNED BY: BNP

AEP PROJECT NUMBER
213–1882–091

© 2009 REYNOLDS, SMITH AND HILLS INC.

SHEET TITLE
BAGGAGE HANDLING SYSTEM TYPICAL DETAILS CONVEYOR LOADING

NO. SHEET NUMBER
B8101

90% NOT FOR CONSTRUCTION

$FILE$
$DATE TIME$

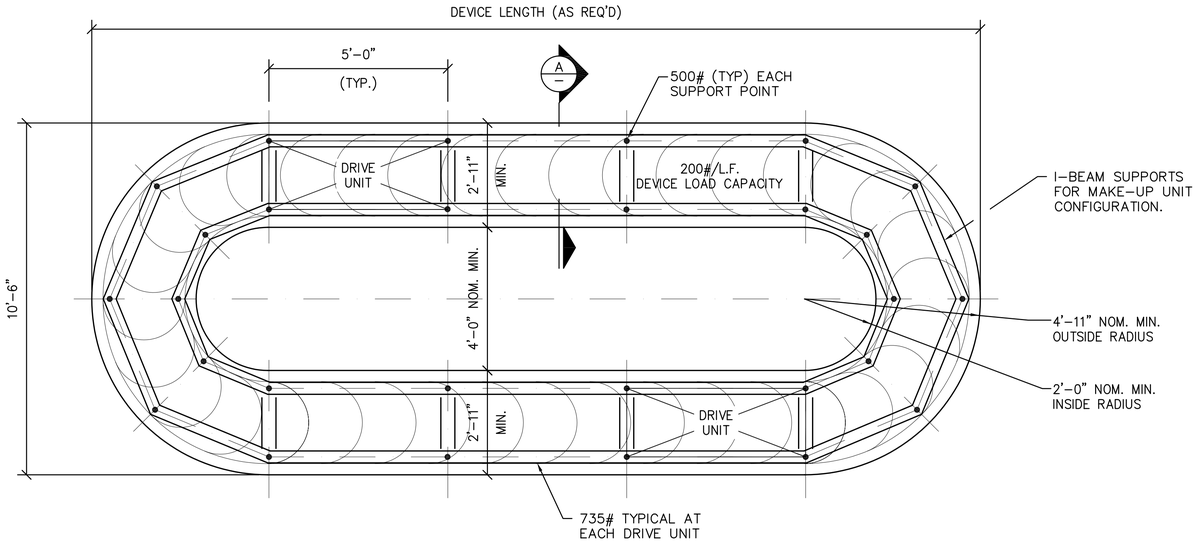

1 / B8102 DETAIL PLAN - FLAT PLATE MAKE-UP DEVICE LOADS
1/2" = 1'-0"

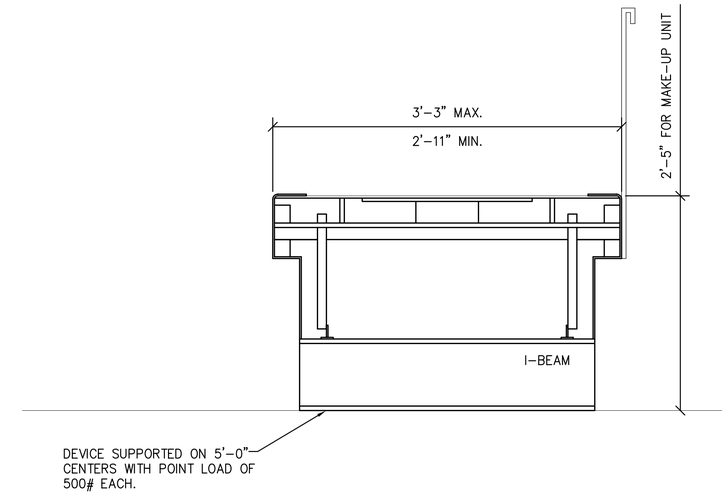

A / B8102 DETAIL SECTION - FLAT PLATE MAKE-UP DEVICE LOADS
1 1/2" = 1'-0"

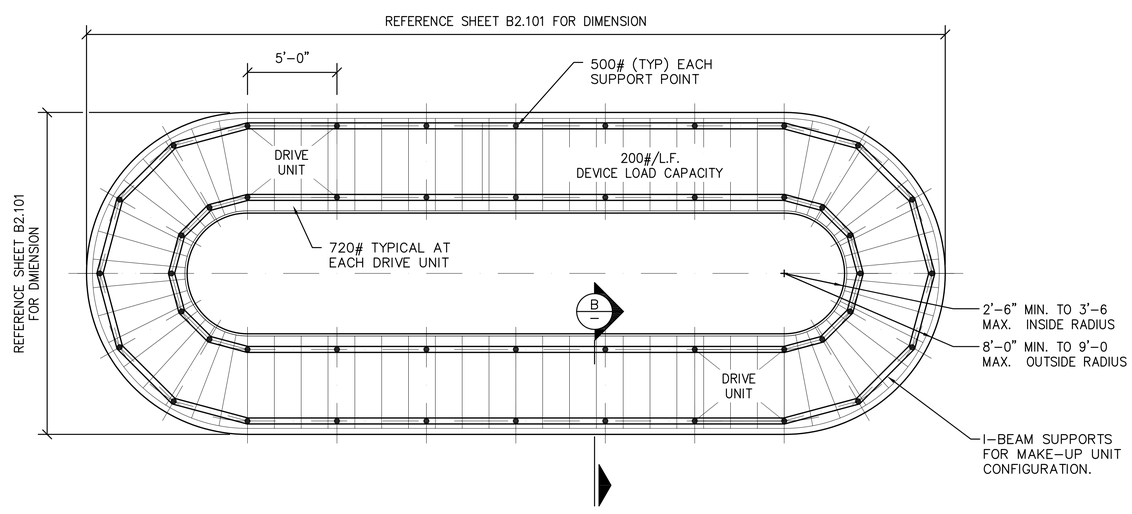

2 / B8102 DETAIL PLAN - INCLINE PLATE CLAIM DEVICE LOADS
1/4" = 1'-0"

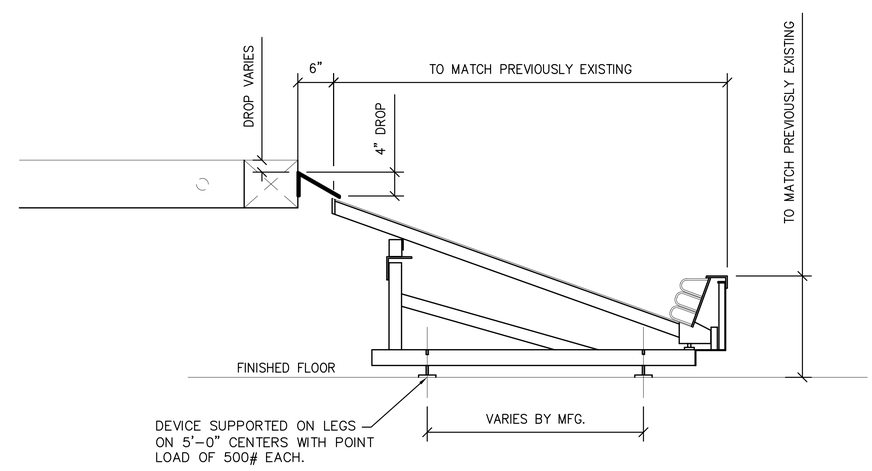

B / B8102 DETAIL SECTION - INCLINE PLATE CLAIM DEVICE LOADS
1" = 1'-0"

RS&H
Architectural, Engineering, Planning and Environmental Services

Reynolds, Smith and Hills, Inc.
850 East Diehl Rd., Suite 120
Naperville, IL 60563
630-505-1991 FAX 630-505-1977
www.rsandh.com

DULUTH AIRPORT AUTHORITY

DULUTH INTERNATIONAL AIRPORT
DULUTH, MN

NEW TERMINAL DESIGN

CONSULTANTS

SJA ARCHITECTS
11 E Superior Street Suite 340, Duluth MN 55802
TEL: (218) 724-8578 / FAX: (218) 724-8717
www.staniusjohnson.com

MBJ CONSULTING ENG.
501 Lake Avenue South, Suite 300, Duluth MN 55802
TEL: (218) 722-1056 / FAX: (218) 722-9306
www.mbjeng.com

BNP ASSOCIATES INC.
14 Fairfield Drive Brookfield, CT 06804
TEL: (203) 792-3000 / FAX: (203) 792-4900
www.bnpassociates.com

COSENTINI
1 East Wacker Drive, Suite 103, Chicago IL 60601
TEL: (312) 670-1800 / FAX: (312) 670-1801
www.cosentini.com

APPOLD DESIGN
2432 East First Street, Duluth MN 55812
TEL: (218) 591-5079
www.appoldesign.com

KRAUS-ANDERSON
3716 Oneota Street, Duluth MN 55807
TEL: (218) 722-3775
www.krausanderson.com

LIGHTING
XXXXXXXXX
TEL: (XXX) XXX-XXXX
www.XXXXXXX.com

REVISIONS

	DESCRIPTION	DATE
-	-	-

DATE ISSUED: 04-05-2010
REVIEWED BY: BNP
DRAWN BY: RPE
DESIGNED BY: BNP

AEP PROJECT NUMBER
213-1882-091

© 2009 REYNOLDS, SMITH AND HILLS INC.

SHEET TITLE
BAGGAGE HANDLING SYSTEM
TYPICAL DETAILS CONVEYOR LOADING

NO. SHEET NUMBER
B8102

90% NOT FOR CONSTRUCTION

$FILE$
$DATE TIME$

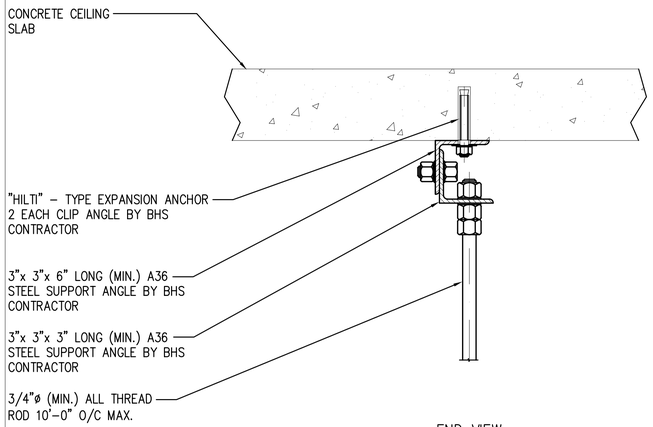

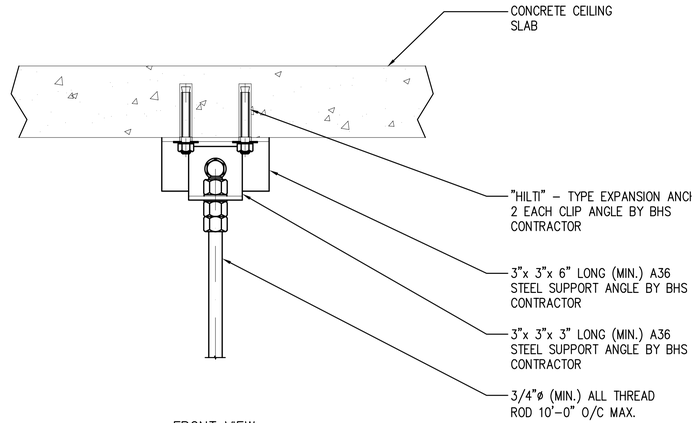

1 B8103 DETAIL - BHS SUPPLIEMENTARY SUPPORT ATTACHMENT
3" = 1'-0"

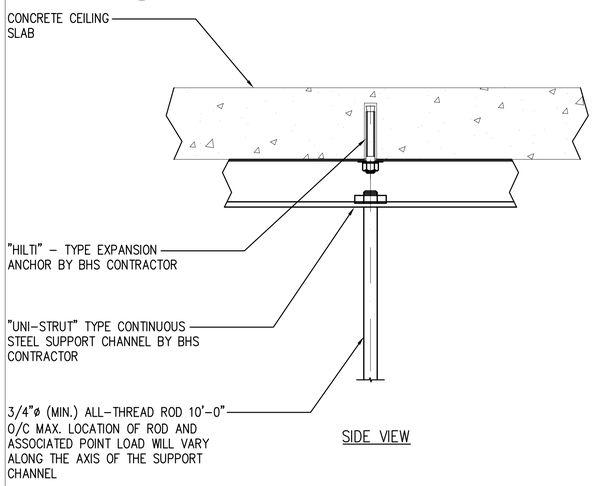

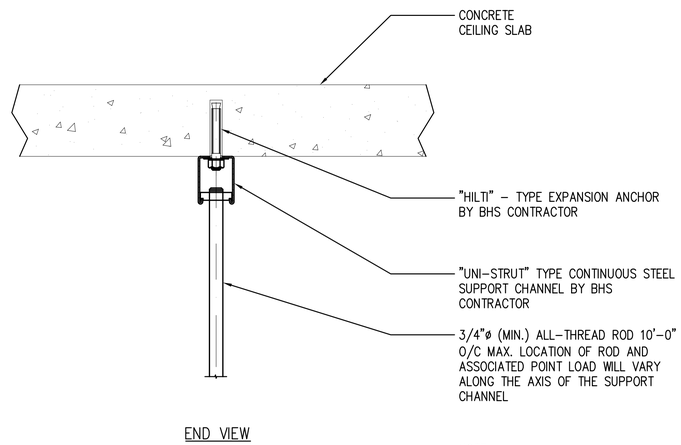

NOTE:

1. ALL ANCHOR POINTS TO PARENT BUILDING SHALL BE APPROVED BY THE STRUCTURAL ENGINEER.

2. EXPANSION–TYPE ANCHORS FOR OVERHEAD SUPPORT WILL REQUIRE COORDINATION WITH AND APPROVAL BY THE STRUCTURAL ENGINEER.

2 B8103 DETAIL -BHS SUPPLIMENTATRY HEADER STEEL ATTACHMENT
3" = 1'-0"

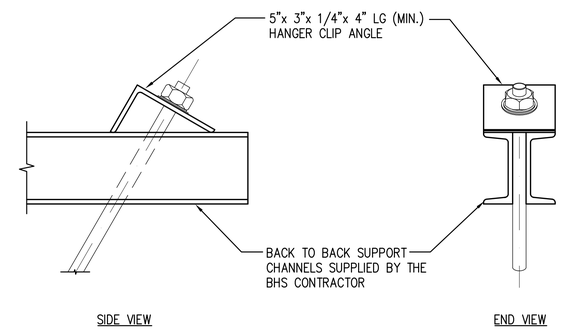

3 B8103 DETAIL -SWAY BRACE @ BACK TO BACK SUPPORT HEADER
3" = 1'-0"

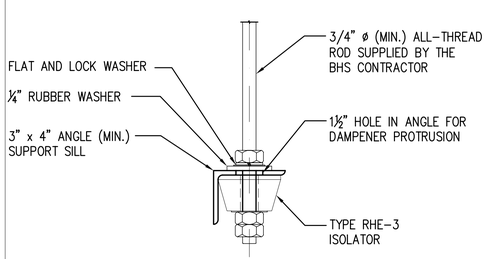

4 B8103 DETAIL -SUPPORT SILL WITH VIBRATION ISOLATION
3" = 1'-0"

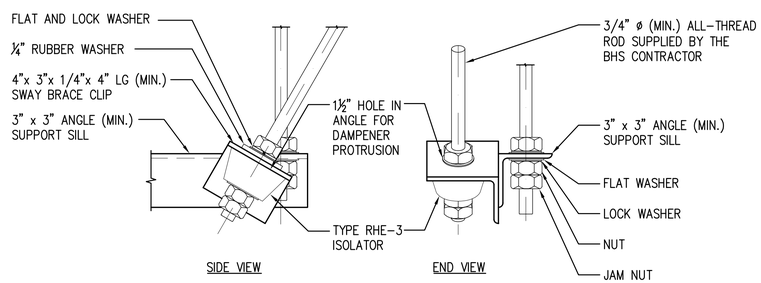

5 B8103 DETAIL -SWAY BRACE FOR ANGLE SUPPORT SILL
3" = 1'-0"

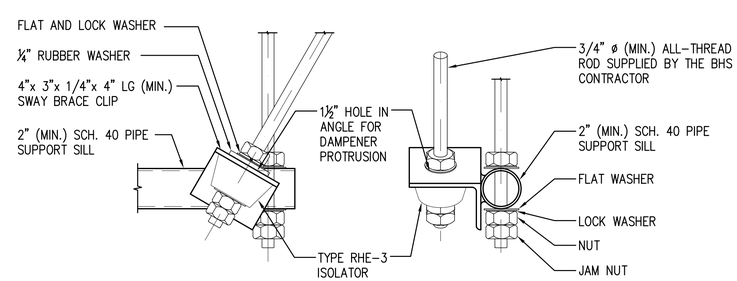

6 B8103 DETAIL -SWAY BRACE FOR PIPE SILL
3" = 1'-0"

$FILE$
$DATE TIME$

RS&H®
Architectural, Engineering, Planning and Environmental Services

Reynolds, Smith and Hills, Inc.
850 East Diehl Rd., Suite 120
Naperville, IL 60563
630–505–1991 FAX 630–505–1977
www.rsandh.com

DULUTH AIRPORT AUTHORITY

DULUTH INTERNATIONAL AIRPORT
DULUTH, MN

NEW TERMINAL DESIGN

CONSULTANTS

SJA ARCHITECTS
11 E Superior Street Suite 340, Duluth MN 55802
TEL: (218) 724-8578 / FAX: (218) 724-8717
www.staniusjohnson.com

MBJ CONSULTING ENG.
501 Lake Avenue South, Suite 300, Duluth MN 55802
TEL: (218) 722-1056 / FAX: (218) 722-9306
www.mbjeng.com

BNP ASSOCIATES INC.
14 Fairfield Drive Brookfield, CT 06804
TEL: (203) 792-3000 / FAX: (203) 792-4900
www.bnpassociates.com

COSENTINI
1 East Wacker Drive, Suite 103, Chicago IL 60601
TEL: (312) 670-1800 / FAX: (312) 670-1801
www.cosentini.com

APPOLD DESIGN
2432 East First Street, Duluth MN 55812
TEL: (218) 591-5079
www.apploddesign.com

KRAUS-ANDERSON
3716 Oneota Street, Duluth MN 55807
TEL: (218) 722-3775
www.krausanderson.com

LIGHTING
XXXXXXXXX
TEL: (XXX) XXX-XXXX
www.XXXXXXX.com

REVISIONS

	DESCRIPTION	DATE
-	-	-

DATE ISSUED: 04–05–2010
REVIEWED BY: BNP
DRAWN BY: RPE
DESIGNED BY: BNP

AEP PROJECT NUMBER
213–1882–091

© 2009 REYNOLDS, SMITH AND HILLS INC.

SHEET TITLE
BAGGAGE HANDLING SYSTEM
TYPICAL DETAILS
ATTACHMENTS

NO. SHEET NUMBER
B8103

90% NOT FOR CONSTRUCTION

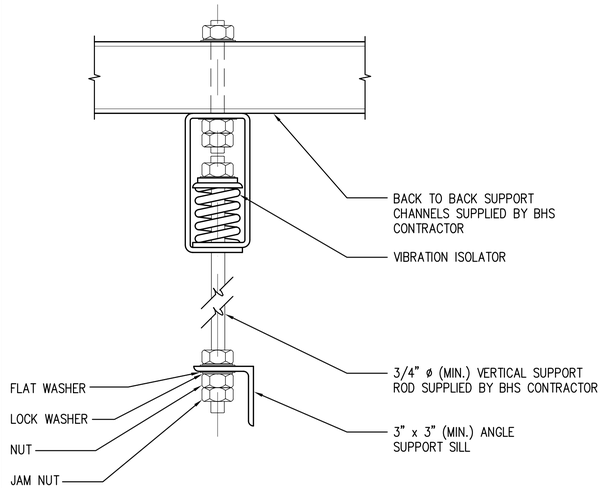

1 / B8104 DETAIL - HANGER APPLICATION AT BACK TO BACK CHANNEL HEADER
3" = 1'-0"

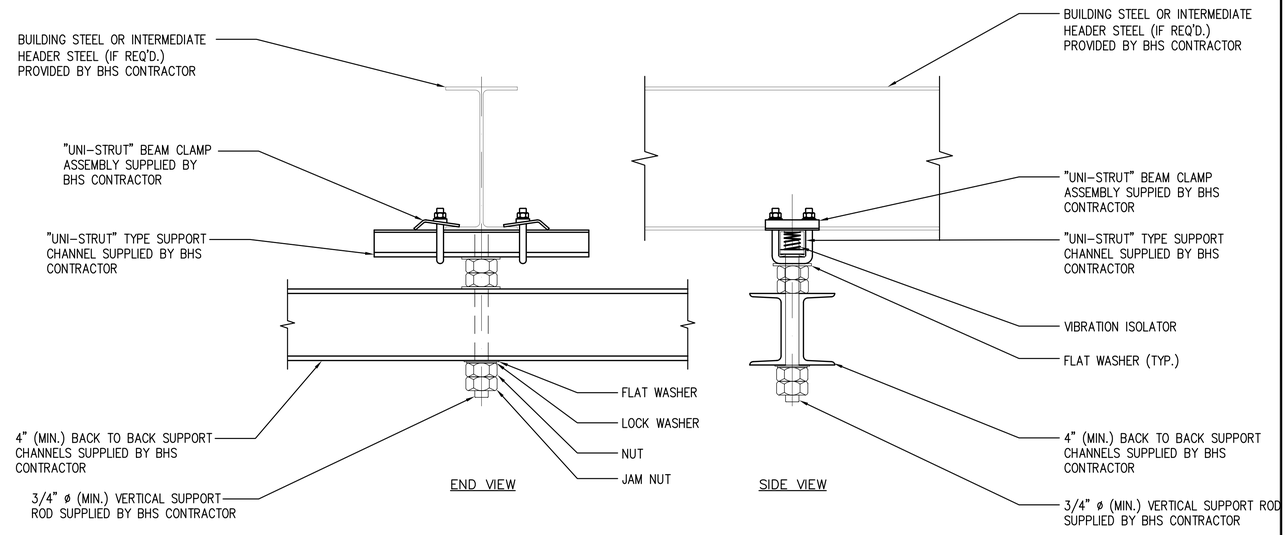

2 / B8104 DETAIL - BHS SUPPLIMENTARY HEADER STEEL ATTACHMENT-BEAM CLAMP B
3" = 1'-0"

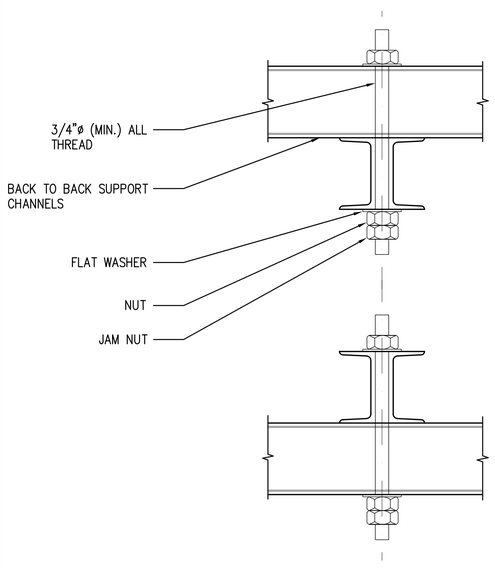

3 / B8104 DETAIL - ALTERNATE BACK TO BACK HEADER ATTACHMENT
3" = 1'-0"

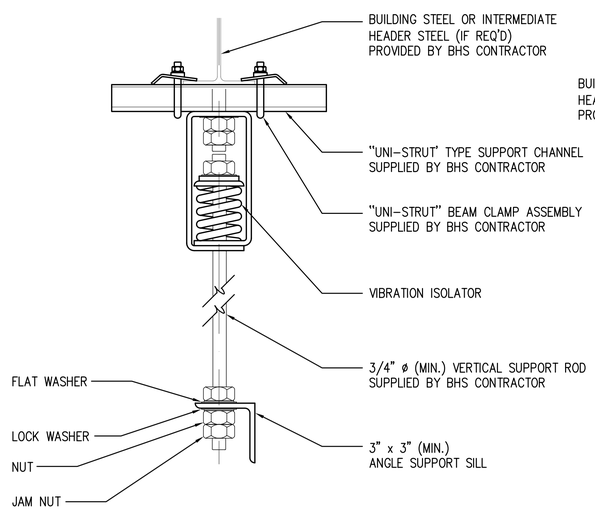

4 / B8104 DETAIL - HANGER APPLICATION AT BUILDING STEEL
3" = 1'-0"

NOTE:
LOCATION OF ROD AND ASSOCIATED POINT LOAD WILL VARY ALONG THE AXIS OF THE SUPPORT CHANNEL.

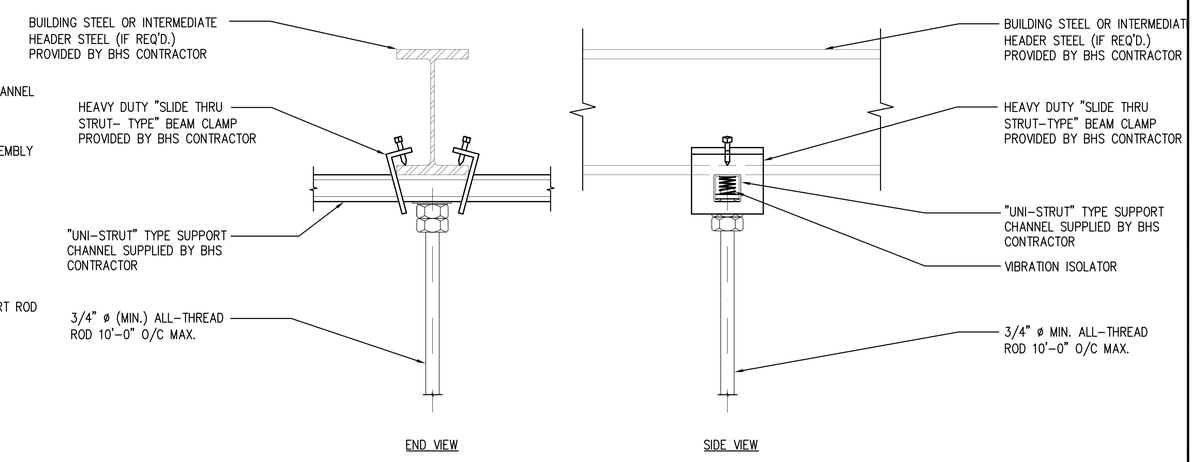

2 / B8104 DETAIL - BHS SUPPLIMENTARY HEADER STEEL ATTACHMENT-BEAM CLAMP A
3" = 1'-0"

RS&H
Architectural, Engineering, Planning and Environmental Services
Reynolds, Smith and Hills, Inc.
850 East Diehl Rd., Suite 120
Naperville, IL 60563
630-505-1991 FAX 630-505-1977
www.rsandh.com

DULUTH AIRPORT AUTHORITY

DULUTH INTERNATIONAL AIRPORT
DULUTH, MN

NEW TERMINAL DESIGN

CONSULTANTS

SJA ARCHITECTS
11 E Superior Street Suite 340, Duluth MN 55802
TEL: (218) 724-8578 / FAX: (218) 724-8717
www.staniusjohnson.com

MBJ CONSULTING ENG.
501 Lake Avenue South, Suite 300, Duluth MN 55802
TEL: (218) 722-1056 / FAX: (218) 722-9306
www.mbjeng.com

BNP ASSOCIATES INC.
14 Fairfield Drive Brookfield, CT 06804
TEL: (203) 792-3000 / FAX: (203) 792-4900
www.bnpassociates.com

COSENTINI
1 East Wacker Drive, Suite 103, Chicago IL 60601
TEL: (312) 670-1800 / FAX: (312) 670-1801
www.cosentini.com

APPOLD DESIGN
2432 East First Street, Duluth MN 55812
TEL: (218) 591-5079
www.appoldesign.com

KRAUS-ANDERSON
3716 Oneota Street, Duluth MN 55807
TEL: (218) 722-3775
www.krausanderson.com

LIGHTING
XXXXXXXXX
TEL: (XXX) XXX-XXXX
www.XXXXXXX.com

REVISIONS

	DESCRIPTION	DATE
-	-	-

DATE ISSUED: 04-05-2010
REVIEWED BY: BNP
DRAWN BY: RPE
DESIGNED BY: BNP

AEP PROJECT NUMBER
213-1882-091

© 2009 REYNOLDS, SMITH AND HILLS INC.

SHEET TITLE
BAGGAGE HANDLING SYSTEM TYPICAL DETAILS ATTACHMENTS

NO. SHEET NUMBER
B8104

90% NOT FOR CONSTRUCTION

$FILE$
$DATE TIME$

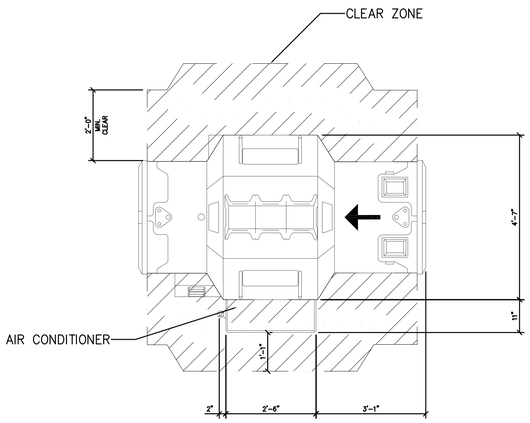

1 / B8105 DETAIL PLAN - CT80DR EXPLOSIVES DETECTION MACHINE

1/2" = 1'-0"

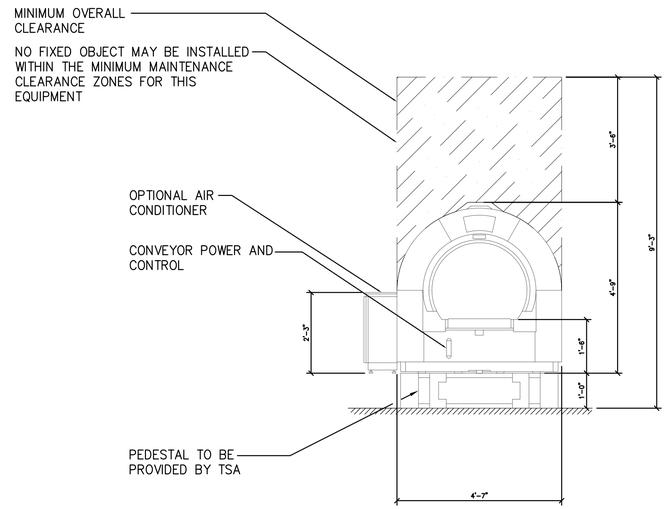

B / B8105 DETAIN SECTION - CT80DR EXPLOSIVES DETECTION MACHINE

1/2" = 1'-0"

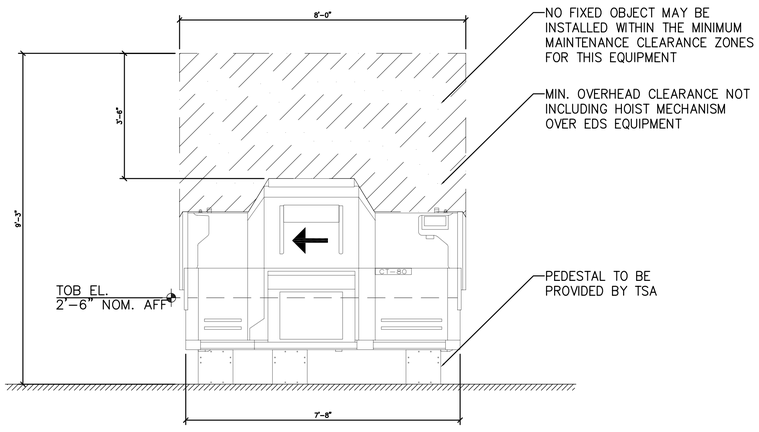

A / B8105 DETAIL ELEVATION - CT80DR EXPLOSIVES DETECTION MACHINE

1/2" = 1'-0"

$FILE$
$DATE TIME$

RS&H®
Architectural, Engineering, Planning and Environmental Services

Reynolds, Smith and Hills, Inc.
850 East Diehl Rd., Suite 120
Naperville, IL 60563
630-505-1991 FAX 630-505-1977
www.rsandh.com

DULUTH AIRPORT AUTHORITY

DULUTH INTERNATIONAL AIRPORT
DULUTH, MN

NEW TERMINAL DESIGN

CONSULTANTS

SJA ARCHITECTS
11 E Superior Street Suite 340, Duluth MN 55802
TEL: (218) 724-8578 / FAX: (218) 724-8717
www.staniusjohnson.com

MBJ CONSULTING ENG.
501 Lake Avenue South, Suite 300, Duluth MN 55802
TEL: (218) 722-1056 / FAX: (218) 722-9306
www.mbjeng.com

BNP ASSOCIATES INC.
14 Fairfield Drive Brookfield, CT 06804
TEL: (203) 792-3000 / FAX: (203) 792-4900
www.bnpassociates.com

COSENTINI
1 East Wacker Drive, Suite 103, Chicago IL 60601
TEL: (312) 670-1800 / FAX: (312) 670-1801
www.cosentini.com

APPOLD DESIGN
2432 East First Street, Duluth MN 55812
TEL: (218) 591-5079
www.appoloddesign.com

KRAUS-ANDERSON
3716 Oneota Street, Duluth MN 55807
TEL: (218) 722-3775
www.krausanderson.com

LIGHTING
XXXXXXXXX
TEL: (XXX) XXX-XXXX
www.XXXXXXX.com

REVISIONS

	DESCRIPTION	DATE
-	-	-

DATE ISSUED: 04-05-2010
REVIEWED BY: BNP
DRAWN BY: RPE
DESIGNED BY: BNP

AEP PROJECT NUMBER
213-1882-091

© 2009 REYNOLDS, SMITH AND HILLS INC.

SHEET TITLE

BAGGAGE HANDLING SYSTEM
TYPICAL DETAILS CT80 DR

NO. SHEET NUMBER
B8105

90% NOT FOR CONSTRUCTION

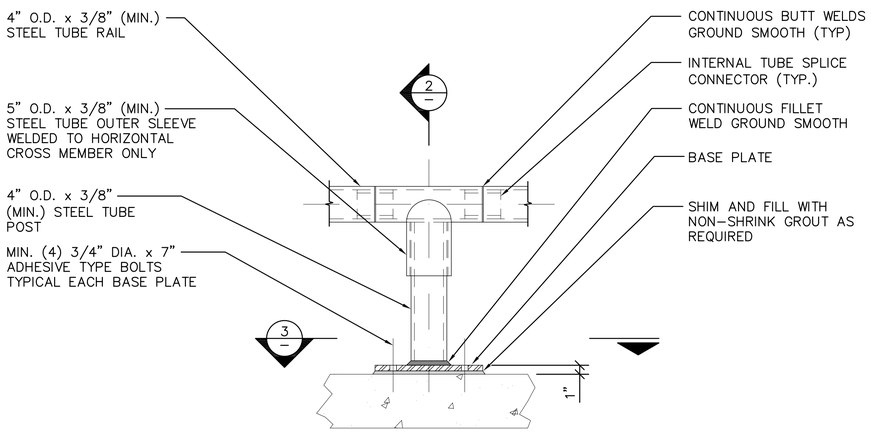

1 B8104 DETAIL PLAN - IMPACT PROTECTION

1/2" = 1'-0"

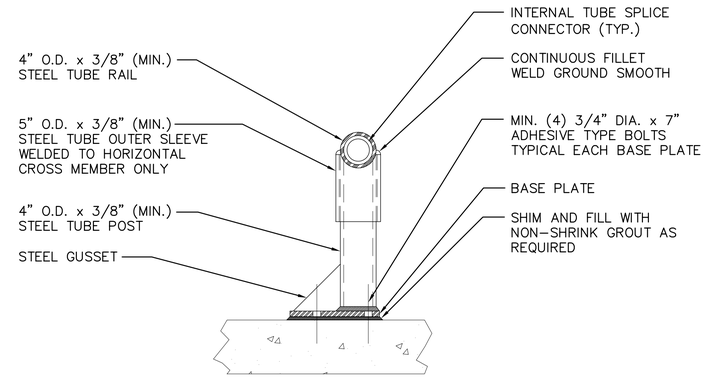

2 B8104 DETAIL SECTION - IMPACT PROTECTION

1/2" = 1'-0"

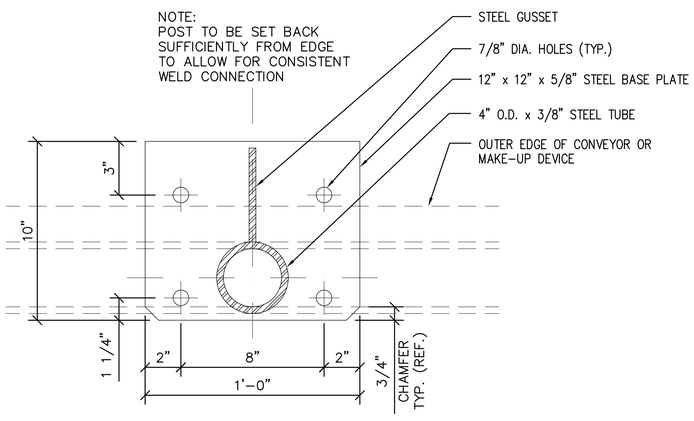

3 B8104 DETAIN SECTION - CT80DR EXPLOSIVES DETECTION MACHINE

1/2" = 1'-0"

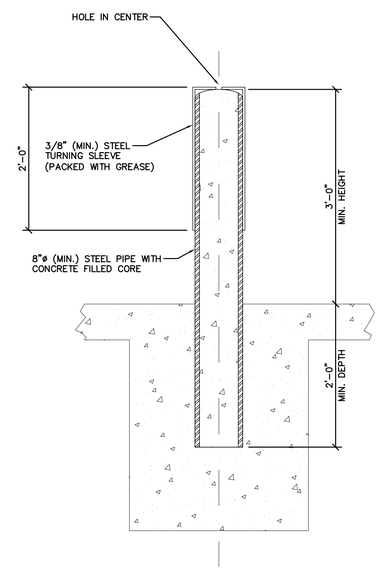

4 B8104 DETAIL SECTION - IMPACT PROTECTION

1/2" = 1'-0"

RS&H

Architectural, Engineering, Planning and Environmental Services

Reynolds, Smith and Hills, Inc.
850 East Diehl Rd., Suite 120
Naperville, IL 60563
630-505-1991 FAX 630-505-1977
www.rsandh.com

DULUTH AIRPORT AUTHORITY

DULUTH INTERNATIONAL AIRPORT
DULUTH, MN

NEW TERMINAL DESIGN

CONSULTANTS

SJA ARCHITECTS
11 E Superior Street Suite 340, Duluth MN 55802
TEL: (218) 724-8578 / FAX: (218) 724-8717
www.staniusjohnson.com

MBJ CONSULTING ENG.
501 Lake Avenue South, Suite 300, Duluth MN 55802
TEL: (218) 722-1056 / FAX: (218) 722-9306
www.mbjeng.com

BNP ASSOCIATES INC.
14 Fairfield Drive Brookfield, CT 06804
TEL: (203) 792-3000 / FAX: (203) 792-4900
www.bnpassociates.com

COSENTINI
1 East Wacker Drive, Suite 103, Chicago IL 60601
TEL: (312) 670-1800 / FAX: (312) 670-1801
www.cosentini.com

APPOLD DESIGN
2432 East First Street, Duluth MN 55812
TEL: (218) 591-5079
www.appoloddesign.com

KRAUS-ANDERSON
3716 Oneota Street, Duluth MN 55807
TEL: (218) 722-3775
www.krausanderson.com

LIGHTING
XXXXXXXXX
TEL: (XXX) XXX-XXXX
www.XXXXXXX.com

REVISIONS

	DESCRIPTION	DATE
-	-	-

DATE ISSUED: 04-05-2010
REVIEWED BY: BNP
DRAWN BY: RPE
DESIGNED BY: BNP

AEP PROJECT NUMBER
213-1882-091

© 2009 REYNOLDS, SMITH AND HILLS INC.

SHEET TITLE

BAGGAGE HANDLING SYSTEM TYPICAL DETAILS IMPACT PROTECTION

NO. SHEET NUMBER

B8106

90% NOT FOR CONSTRUCTION

$FILE$
$DATE TIME$

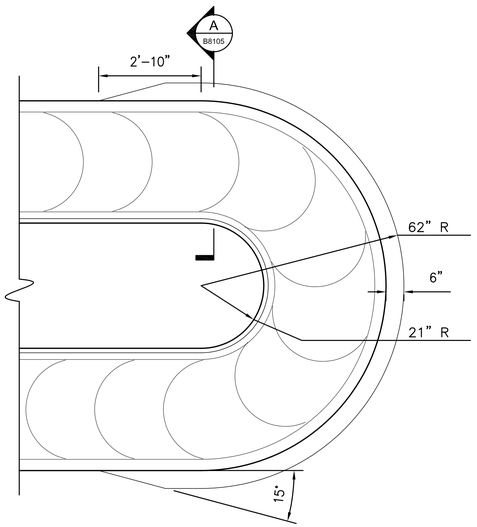

1 / B8105 DETAIL PLAN - FLATE PLATE MAKE-UP DEVICE SIDEGUARD

1/2" = 1'-0"

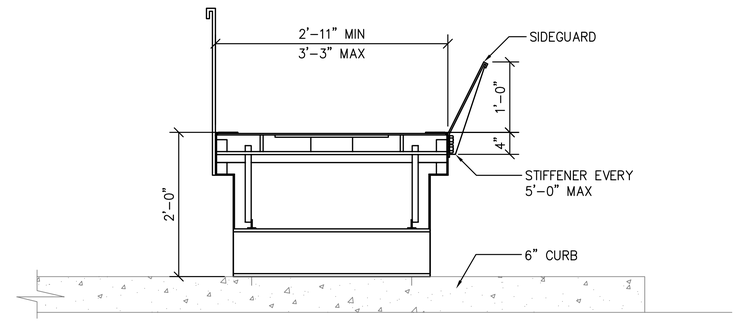

A / B8105 DETAIL SECTION - FLAT PLATE MAKE-UP - SIDEGUARD

1" = 1'-0"

RS&H®

Architectural, Engineering, Planning and Environmental Services

Reynolds, Smith and Hills, Inc.
850 East Diehl Rd., Suite 120
Naperville, IL 60563
630-505-1991 FAX 630-505-1977
www.rsandh.com

DULUTH AIRPORT AUTHORITY

DULUTH INTERNATIONAL AIRPORT
DULUTH, MN

NEW TERMINAL DESIGN

CONSULTANTS

SJA ARCHITECTS
11 E Superior Street Suite 340, Duluth MN 55802
TEL: (218) 724-8578 / FAX: (218) 724-8717
www.staniusjohnson.com

MBJ CONSULTING ENG.
501 Lake Avenue South, Suite 300, Duluth MN 55802
TEL: (218) 722-1056 / FAX: (218) 722-9306
www.mbjeng.com

BNP ASSOCIATES INC.
14 Fairfield Drive Brookfield, CT 06804
TEL: (203) 792-3000 / FAX: (203) 792-4900
www.bnpassociates.com

COSENTINI
1 East Wacker Drive, Suite 103, Chicago IL 60601
TEL: (312) 670-1800 / FAX: (312) 670-1801
www.cosentini.com

APPOLD DESIGN
2432 East First Street, Duluth MN 55812
TEL: (218) 591-5079
www.appoloddesign.com

KRAUS-ANDERSON
3716 Oneota Street, Duluth MN 55807
TEL: (218) 722-3775
www.krausanderson.com

LIGHTING
XXXXXXXXX
TEL: (XXX) XXX-XXXX
www.XXXXXXX.com

REVISIONS

	DESCRIPTION	DATE
-	-	-

DATE ISSUED: 04-05-2010
REVIEWED BY: BNP
DRAWN BY: RPE
DESIGNED BY: BNP

AEP PROJECT NUMBER
213-1882-091

© 2009 REYNOLDS, SMITH AND HILLS INC.

SHEET TITLE

BAGGAGE HANDLING SYSTEM
TYPICAL DETAILS FLARED MU
SIDEGUARD

NO. SHEET NUMBER

B8107

90% NOT FOR CONSTRUCTION

$FILE$
$DATE TIME$

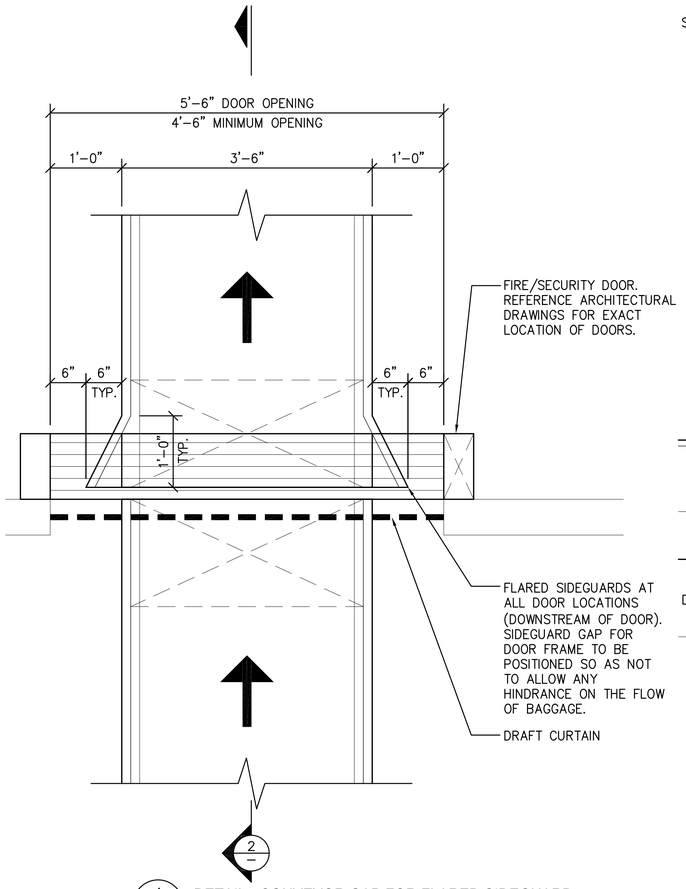

1 B8108 DETAIL - CONVEYOR GAP FOR FLARED SIDEGUARD
1'-0" = 1'-0"

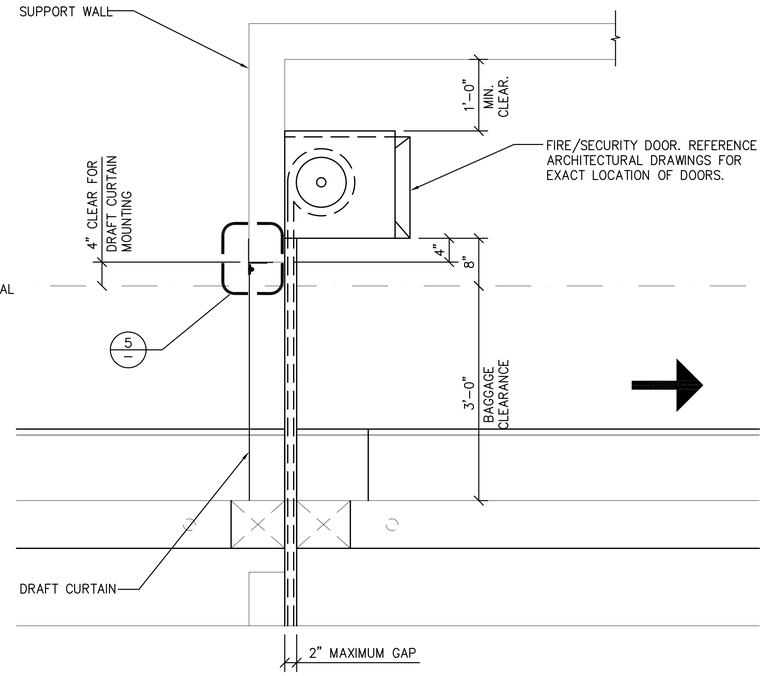

2 B8108 DETAIL - CONVEYOR GAP FOR FIRE/SECURITY DOOR
1'-0" = 1'-0"

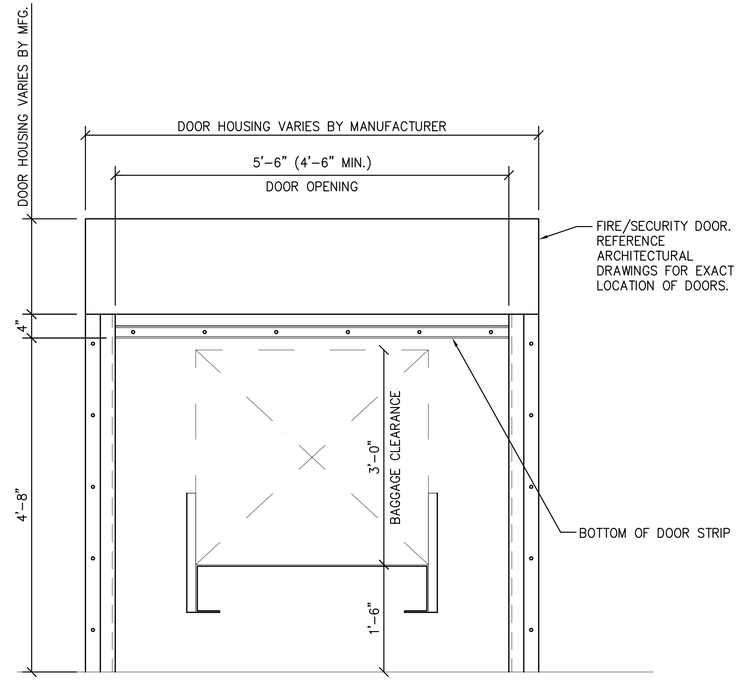

3 B8108 DETAIL - OPENING AND FIRE / SECURITY DOOR
1'-0" = 1'-0"

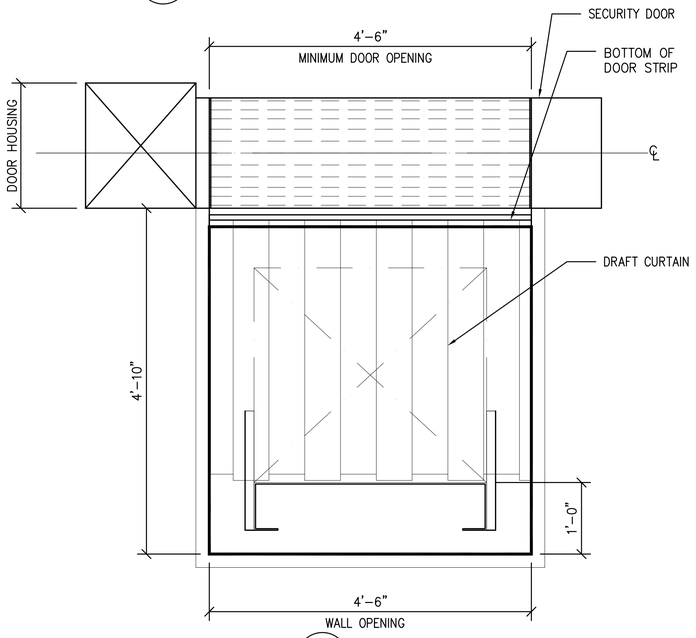

4 B8108 DETAIL - DRAFT CURTAIN ATTACHMENT
1'-0" = 1'-0"

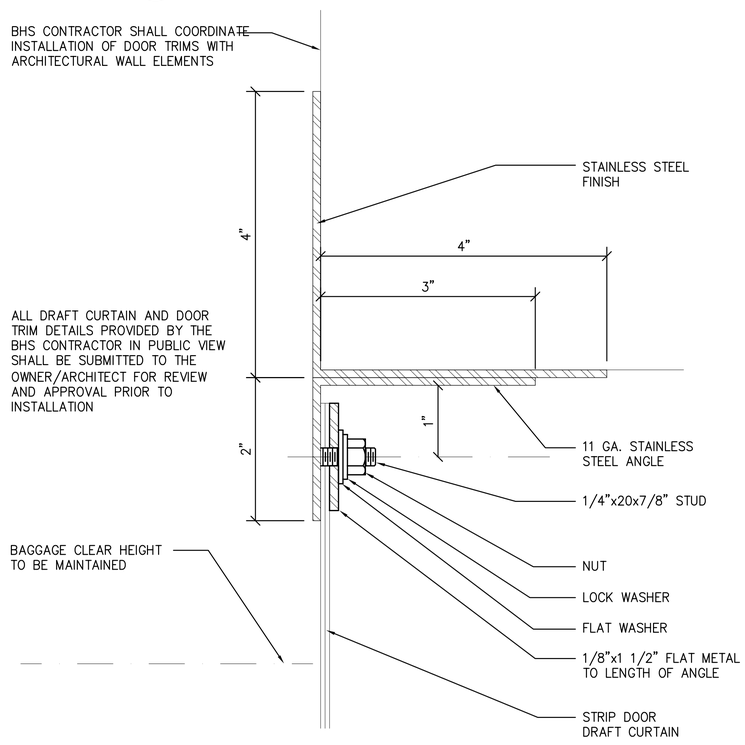

5 B8108 DETAIL - DRAFT CURTAIN ATTACHMENT
1'-0" = 1'-0"

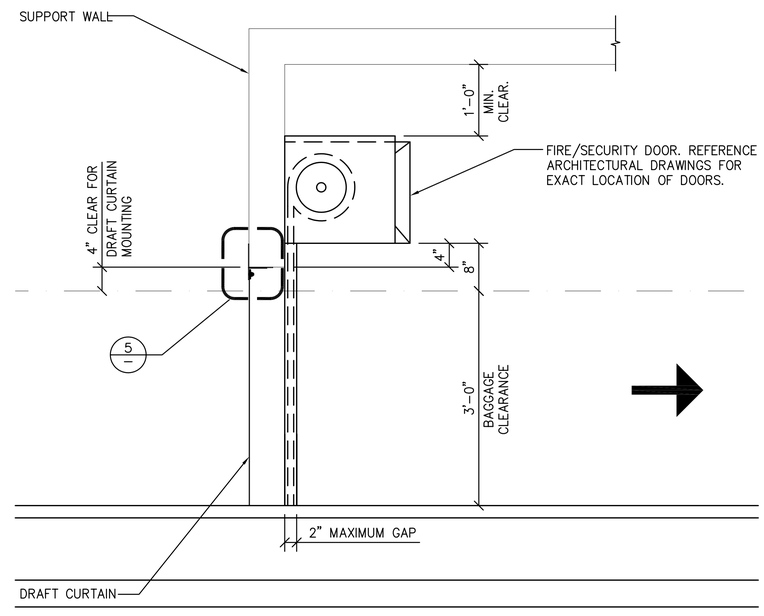

6 B8108 DETAIL - CONVEYOR GAP FOR FLARED SIDEGUARD
1'-0" = 1'-0"

$FILE$
$DATE TIME$

RS&H
Architectural, Engineering, Planning and Environmental Services
Reynolds, Smith and Hills, Inc.
850 East Diehl Rd., Suite 120
Naperville, IL 60563
630-505-1991 FAX 630-505-1977
www.rsandh.com

DULUTH AIRPORT AUTHORITY

DULUTH INTERNATIONAL AIRPORT
DULUTH, MN

NEW TERMINAL DESIGN

CONSULTANTS

SJA ARCHITECTS
11 E Superior Street Suite 340, Duluth MN 55802
TEL: (218) 724-8578 / FAX: (218) 724-8717
www.staniusjohnson.com

MBJ CONSULTING ENG.
501 Lake Avenue South, Suite 300, Duluth MN 55802
TEL: (218) 722-1056 / FAX: (218) 722-9306
www.mbjeng.com

BNP ASSOCIATES INC.
14 Fairfield Drive Brookfield, CT 06804
TEL: (203) 792-3000 / FAX: (203) 792-4900
www.bnpassociates.com

COSENTINI
1 East Wacker Drive, Suite 103, Chicago IL 60601
TEL: (312) 670-1800 / FAX: (312) 670-1801
www.cosentini.com

APPOLD DESIGN
2432 East First Street, Duluth MN 55812
TEL: (218) 591-5079
www.appoldesign.com

KRAUS-ANDERSON
3716 Oneota Street, Duluth MN 55807
TEL: (218) 722-3775
www.krausanderson.com

LIGHTING
XXXXXXXXX
TEL: (XXX) XXX-XXXX
www.XXXXXXX.com

REVISIONS

	DESCRIPTION	DATE
-	-	-

DATE ISSUED: 04-05-2010
REVIEWED BY: BNP
DRAWN BY: RPE
DESIGNED BY: BNP

AEP PROJECT NUMBER
213-1882-091

© 2009 REYNOLDS, SMITH AND HILLS INC.

SHEET TITLE
BAGGAGE HANDLING SYSTEM TYPICAL DETAILS FIRE DOOR

NO. SHEET NUMBER
B8108

90% NOT FOR CONSTRUCTION

NOTE:
EXAMPLE SIGNAGE REQUIREMENTS SHOWN.
ADDITIONAL SIGNAGE MAY/WILL BE REQUIRED.

DANGER

WATCH OUT
FOR MOVING
EQUIPMENT

BHS OPERATIONAL WARNING SIGN #1 **1**
SCALE: N.T.S.

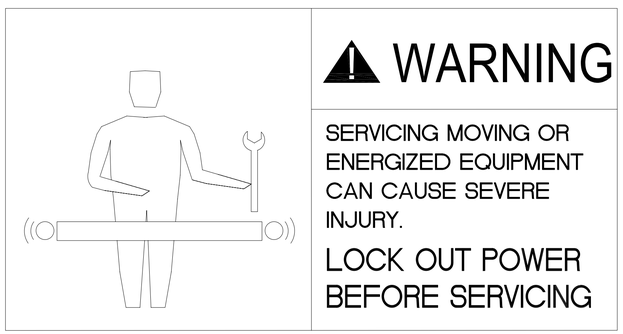

BHS OPERATIONAL WARNING SIGN #2 **2**
SCALE: N.T.S.

BHS OPERATIONAL WARNING SIGN #3 **3**
SCALE: N.T.S.

BHS OPERATIONAL WARNING SIGN #4 **4**
SCALE: N.T.S.

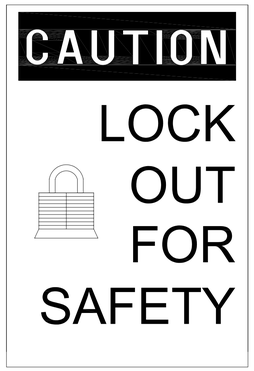

BHS OPERATIONAL WARNING SIGN #5 **5**
SCALE: N.T.S.

CAUTION

KEEP
LOOSE CLOTHING
CLEAR

BHS OPERATIONAL WARNING SIGN #6 **6**
SCALE: N.T.S.

CAUTION

STEP
UP

BHS OPERATIONAL WARNING SIGN #7 **7**
SCALE: N.T.S.

CAUTION

STEP
DOWN

BHS OPERATIONAL WARNING SIGN #8 **8**
SCALE: N.T.S.

CAUTION

FALSE CEILING
BELOW

BHS OPERATIONAL WARNING SIGN #9 **9**
SCALE: N.T.S.

RS&H
Architectural, Engineering, Planning and Environmental Services

Reynolds, Smith and Hills, Inc.
850 East Diehl Rd., Suite 120
Naperville, IL 60563
630-505-1991 FAX 630-505-1977
www.rsandh.com

DULUTH AIRPORT AUTHORITY

DULUTH
INTERNATIONAL
AIRPORT
DULUTH, MN

NEW TERMINAL
DESIGN

CONSULTANTS

SJA ARCHITECTS
11 E Superior Street Suite 340, Duluth MN 55802
TEL: (218) 724-8578 / FAX: (218) 724-8717
www.staniusjohnson.com

MBJ CONSULTING ENG.
501 Lake Avenue South, Suite 300, Duluth MN 55802
TEL: (218) 722-1056 / FAX: (218) 722-9306
www.mbjeng.com

BNP ASSOCIATES INC.
14 Fairfield Drive Brookfield, CT 06804
TEL: (203) 792-3000 / FAX: (203) 792-4900
www.bnpassociates.com

COSENTINI
1 East Wacker Drive, Suite 103, Chicago IL 60601
TEL: (312) 670-1800 / FAX: (312) 670-1801
www.cosentini.com

APPOLD DESIGN
2432 East First Street, Duluth MN 55812
TEL: (218) 591-5079
www.appoloddesign.com

KRAUS-ANDERSON
3716 Oneota Street, Duluth MN 55807
TEL: (218) 722-3775
www.krausanderson.com

LIGHTING
XXXXXXXXX
TEL: (XXX) XXX-XXXX
www.XXXXXXX.com

REVISIONS

	DESCRIPTION	DATE
-	-	-

DATE ISSUED: 04-05-2010
REVIEWED BY: BNP
DRAWN BY: RPE
DESIGNED BY: BNP

AEP PROJECT NUMBER
213-1882-091

© 2009 REYNOLDS, SMITH AND HILLS INC.

SHEET TITLE
BAGGAGE HANDLING SYSTEM DETAILS TYPICAL WARNING SIGNAGE

NO. SHEET NUMBER
B8109

90% NOT FOR CONSTRUCTION

$FILE$
$DATE TIME$

DANGER

480 VOLTS

BHS OPERATIONAL WARNING SIGN #16 **10**
SCALE: N.T.S.

DO NOT OPERATE

CONVEYOR WITHOUT

GUARDS IN PLACE

BHS OPERATIONAL WARNING SIGN #13 **13**
SCALE: N.T.S.

EMERGENCY

STOP

BHS OPERATIONAL WARNING SIGN #15 **16**
SCALE: N.T.S.

DANGER

PINCH
POINT

BHS OPERATIONAL WARNING SIGN #11 **11**
SCALE: N.T.S.

CAUTION

DO NOT

STAND, WALK ON

OR CROSS CONVEYOR

BHS OPERATIONAL WARNING SIGN #14 **14**
SCALE: N.T.S.

DANGER

EQUIPMENT MAY START AT ANY TIME

AUTHORIZED AND TRAINED

PERSONNEL ONLY

BHS OPERATIONAL WARNING SIGN #14 **17**
SCALE: N.T.S.

DANGER

MOVING MACHINERY

KEEP HANDS AND

FEET CLEAR

BHS OPERATIONAL WARNING SIGN #12 **12**
SCALE: N.T.S.

CAUTION

THIS CONVEYOR IS

AUTOMATICALLY CONTROLLED

AND MAY START AT ANY TIME

BHS OPERATIONAL WARNING SIGN #15 **15**
SCALE: N.T.S.

CAUTION

FALSE CEILING

BELOW

BHS OPERATIONAL WARNING SIGN #9 **18**
SCALE: N.T.S.

NOTE:
EXAMPLE SIGNAGE REQUIREMENTS SHOWN,
ADDITIONAL SIGNAGE MAY/WILL BE REQUIRED.

RS&H®
Architectural, Engineering, Planning and Environmental Services

Reynolds, Smith and Hills, Inc.
850 East Diehl Rd., Suite 120
Naperville, IL 60563
630-505-1991 FAX 630-505-1977
www.rsandh.com

DULUTH AIRPORT AUTHORITY

DULUTH
INTERNATIONAL
AIRPORT
DULUTH, MN

NEW TERMINAL
DESIGN

CONSULTANTS

SJA ARCHITECTS
11 E Superior Street Suite 340, Duluth MN 55802
TEL: (218) 724-8578 / FAX: (218) 724-8717
www.staniusjohnson.com

MBJ CONSULTING ENG.
501 Lake Avenue South, Suite 300, Duluth MN 55802
TEL: (218) 722-1056 / FAX: (218) 722-9306
www.mbjeng.com

BNP ASSOCIATES INC.
14 Fairfield Drive Brookfield, CT 06804
TEL: (203) 792-3000 / FAX: (203) 792-4900
www.bnpassociates.com

COSENTINI
1 East Wacker Drive, Suite 103, Chicago IL 60601
TEL: (312) 670-1800 / FAX: (312) 670-1801
www.cosentini.com

APPOLD DESIGN
2432 East First Street, Duluth MN 55812
TEL: (218) 591-5079
www.appoldesign.com

KRAUS-ANDERSON
3716 Oneota Street, Duluth MN 55807
TEL: (218) 722-3775
www.krausanderson.com

LIGHTING
XXXXXXXXX
TEL: (XXX) XXX-XXXX
www.XXXXXXX.com

REVISIONS

	DESCRIPTION	DATE
-	-	-

DATE ISSUED: 04-05-2010
REVIEWED BY: BNP
DRAWN BY: RPE
DESIGNED BY: BNP

AEP PROJECT NUMBER
213-1882-091

© 2009 REYNOLDS, SMITH AND HILLS INC.

SHEET TITLE

BAGGAGE HANDLING SYSTEM DETAILS TYPICAL WARNING SIGNAGE

NO. SHEET NUMBER
B8107

90% NOT FOR CONSTRUCTION

$FILE$
$DATE TIME$