INVITATION TO BID

Michigan Street Hot Water Work between 1st Ave W and Lake Avenue

POSTED: August 4, 2017

Project #: 1601
Bid #: 17-0475

BIDS DUE: Thursday, August 17, 2017 @ 2:00 PM CST

DULUTH ENERGY SYSTEMS
1 Lake Place Drive
Duluth, MN 55802

TABLE OF CONTENTS

BIDDING INFORMATION & FORMS

INVITATION TO BID & INSTRUCTIONS TO BIDDERS
BID FORM
PROMPT PAYMENT TO SUBCONTRACTORS
RESPONSIBLE CONTRACTOR VERIFICATION
AFFIDAVIT OF NON-COLLUSION
EQUAL EMPLOYMENT OPPORTUNITY (EEO) POLICY STATEMENT & COMPLIANCE CERTIFICATE

CONDITIONS OF CONTRACT

DRAFT CONSTRUCTION CONTRACT
CITY OF DULUTH - PART II - SUPPLEMENTARY GENERAL CONDITIONS FOR FEDERALLY, STATE OF MINNESOTA, AND/OR CITY ASSISTED ACTIVITIES
PAYMENT & PERFORMANCE BONDS
PREVAILING WAGE RATES
PROJECT LABOR AGREEMENT (IF APPLICABLE)

PLANS & SPECIFICATIONS

Purchasing Division
100 City Hall, 411 W. 1st Street
Duluth, MN 55802-1189
TEL. 218-730-5340
purchasing@duluthmn.gov

INVITATION TO BID

MICHIGAN STREET HOT WATER WORK – 1ST AVE W TO LAKE AVE

BID NUMBER: **17-0475** **BID OPENING: THURSDAY, AUGUST 17, 2017 AT 2:00 PM**

PROJECT DESCRIPTION: The project involves the installation of pre-insulated, thin-walled, steel hot water piping, fittings, valves and appurtenances. Work includes removal of surface features, excavation, filling pipe with nitrogen for preservation purposes, and surface restoration.

PRE-BID/WALK-THROUGH: A **mandatory** pre-bid walk-through will be conducted on Thursday, August 10, 2017, 11:00 am in Room 106A of City Hall, 411 W. 1st Street, Duluth, MN 55802. All interested bidders must attend.

QUESTIONS: Please submit any questions regarding this project via e-mail to purchasing@duluthmn.gov. Responses will be issued as an addendum to this solicitation.

The selected contractor will be issued a construction contract (draft attached). Notice to Proceed will be issued once the agreement is fully executed.

Proposal forms, contract documents, plans and specifications are on file at the following offices: Duluth Builder's Exchange, Minnesota Builder's Exchange, BXWI-Fox Valley Plan Room, and Blue Book Building and Construction Network.

INSTRUCTIONS TO BIDDERS

All bids must be complete, signed, and transmitted in a sealed envelope plainly marked with the bid number, subject matter, and opening date.

Bids may be mailed to the Purchasing Office, City Hall, 411 West 1st Street, Room 100, Duluth, MN 55802 or dropped off in person at the same address.

Bids must be received in Purchasing before 2:00 PM local time on the bid opening date specified on the Invitation for Bids. The City Purchasing Agent or her designee will conduct a public bid opening in Room 100 immediately following receipt of the bids. Once all bids have been reviewed, bid results will be posted online at http://www.duluthmn.gov/purchasing/bids-request-for-proposals/.

No alternatives to the specification will be considered unless specifically requested. Erasures or other changes to the bid must be initialed and dated, however no special conditions shall be made or included in the bid form by the bidder.

The City of Duluth reserves the right to split the award where there is a substantial savings to the City, to waive informalities and to reject any and all bids. Price may not be the only consideration for bid award. Bids must be firm for a minimum of 30 days.

The following documents must be submitted with your bid:

1. **Bid Bond** - A certified check or bank draft, payable to the order of the City of Duluth, negotiable U.S. Government Bonds (at par value), or a satisfactory bid bond executed by the bidder and acceptable surety, in an amount equal to five per cent (5%) of the total bid. Bids may be withdrawn without forfeiture of surety

if the request is submitted by the Bidder and received at the Purchasing Office in writing or by e-mail prior to the scheduled bid opening.

2. **Acknowledgment of Addendum –** any changes to this solicitation will be announced via Addendum. Bidders must indicate that they have reviewed any addendum(s) by initialing and dating on the bid form where indicated. Failure to acknowledge addendum(s) may result in your bid being deemed non-responsive.

3. **Responsible Contractor** - No construction contract in excess of $50,000 will be awarded unless the Bidder is a "responsible contractor" as defined in Minnesota Statute §16C.285, subdivision 3. All Bidders submitting a proposal for this project must verify that they meet the minimum criteria specified in the statute by submitting a Responsible Contractor Verification and Certification of Compliance form (attached) with their bid. The owner or officer of the company must sign the form under oath verifying compliance with each of the minimum criteria. Making a false statement under oath will render the Bidder or subcontractor that makes the false statement ineligible to be awarded a construction project and may result in termination of a contract awarded to a Bidder or subcontractor that submits a false statement. Bidders must obtain verification of compliance from all subcontractors. Bidders must submit signed copies of verifications and certifications of compliance from subcontractors at the City's request.

4. **Welding Procedure Specifications (WPS)** for welding on thin-walled steel pipe.

5. **Procedure Qualification Records** corresponding to the submitted WPSs.

6. **Certification of Qualification** for a minimum of five welders for the submitted WPSs.

7. **Coupon Test Results** for each welder corresponding to each WPS.

8. **Reference Documentation** attesting to past experience installing pre-insulated thin-wall steel piping systems. Such documentation shall include the name of the facility owner, location, date the work was performed, amount and size of pipe installed, and a contact name and phone number for verification purposes.

Please note that the following requirements also apply to this project, and any additional required documents must be submitted prior to award/contract execution. Submitting these documents with your bid will assist in expediting the process.

1. **Insurance** – Contractor must provide proof of Public Liability and Automobile Liability Insurance with limits not less than $1,500,000 Single Limit prior to the commencement of work. The City of Duluth must be named as an additional insured. Please refer to the draft Contract, Section 7.

2. **Affidavit of Non-Collusion** – The successful bidder shall be required to execute the attached affidavit stating that he/she has not entered into a collusive agreement with any other person, firm, or corporation in regard to any bid submitted.

3. **Performance & Payment Bonds** – The awarded contractor will be required to submit performance and payments bonds in the full amount of the project cost prior to award.

4. **Affirmative Action/EEO** - The contractor must take affirmative action to ensure that the employees and applicants for employment are not discriminated against because of their race, color, creed, sex or national origin, and must meet the affirmative action goals. Contractors are encouraged to subcontract with Disadvantaged Business Enterprises (DBEs) when possible. A current list of certified DBEs is available on the Minnesota Unified Certification website at http://mnucp.metc.state.mn.us . Contractor will comply with all applicable Equal Employment Opportunity laws and regulations. Awarded contractor will submit the attached Equal Employment Opportunity (EEO) Affirmative Action Policy Statement & Compliance Certificate.

5. **Project Labor Agreement (PLA)** - A PLA will be required for any bid that is over or could virtually go over $150,000. A copy of the City standard PLA is included in this package.

6. **Out of State Contractor** - Unless a State of Minnesota Certificate of Exemption is provided, any out-of-state bidder receiving a bid award will have 8% retained from invoice payments on any contracts over $50,000. Submit a signed copy of the signed exemption form when submitting Payment and Performance Bonds. This form may be found at: http://www.revenue.state.mn.us/Forms_and_Instructions/sde.pdf

7. **Prevailing Wage** - Not less than the minimum salaries and prevailing wages as set forth in the contract documents must be paid on this project.

The City of Duluth is an Equal Opportunity Employer. Contractor shall comply with all applicable Equal Employment Opportunity laws and regulations.

CITY OF DULUTH

Amanda Ashbach
Purchasing Agent

DULUTH ENERGY SYSTEMS

Duluth Energy Systems
One Lake Place Drive
Duluth, MN 55802

City Project #1601
EGE Project EGE-0058
Duluth Energy System Hot Water
Plant Connection Ph. 2
8/2/2017

BID FORM

DULUTH ENERGY SYSTEMS PROJECT #1601

HOT WATER PLANT CONNECTION PHASE 2

MICHIGAN STREET HOT WATER PIPING

Bids due at City of Duluth Purchasing offices before: 2:00 PM, THURSDAY, AUGUST 17, 2017

Company Name:

Street Address:

City: State: Zip Code:

Telephone Number: Email Address:

A. Phase 2 Base Bid

Install 700 feet of hot water piping from Sta. 3+24 to Sta. 6+80

	Total
Mechanical	
Civil	
Electrical	
Insulation	

Total Bid Item A $0.00

B. Rock Excavation Base Bid

Rock Excavation for Phase 2 Base Bid	Units	Qty	Unit Price	**Total**
Rock Excavation	CY	200		

Total Project Base Bid (Bid Items A&B) $0.00

A. Phase 2 Add Alternate

Install 110 feet of hot water piping from Sta. 6+80 to Sta. 7+35

	Total
Mechanical	
Civil	
Electrical	
Insulation	

Total Add Alternate Bid $0.00

The Contractor acknowledges the following Addenda (if any): _____

Total Bid Item A In Writing: _____

NOTICE TO BIDDERS

Minnesota Statutes that require prompt payment to subcontractors:

471.425 Prompt payment of local government bills.

Subd. 1. Definitions. For the purposes of this section, the following terms have the meanings here given them.

(d) "Municipality" means any home rule charter or statutory city, county, town, school district, political subdivision or agency of local government. "Municipality" means the metropolitan council or any board or agency created under chapter 473.

Subd. 4a. Prompt payment to subcontractors.

Each contract of a municipality must require the prime contractor to pay any subcontractor within ten days of the prime contractor's receipt of payment from the municipality for undisputed services provided by the subcontractor. The contract must require the prime contractor to pay interest of 1-1/2 percent per month or any part of a month to the subcontractor on any undisputed amount not paid on time to the subcontractor. The minimum monthly interest penalty payment for an unpaid balance of $100 or more is $10. For an unpaid balance of less than $100, the prime contractor shall pay the actual penalty due to the subcontractor. A subcontractor who prevails in a civil action to collect interest penalties from a prime contractor must be awarded its costs and disbursements, including attorney's fees, incurred in bringing the action.

HIST: 1985 c 136 s 5; 1995 c 31 s 1

THIS FORM MUST BE RETURNED WITH YOUR BID

PRIME CONTRACTOR RESPONSE

RESPONSIBLE CONTRACTOR VERIFICATION AND CERTIFICATION OF COMPLIANCE

STATE PROJECT NUMBER: _____

This form includes changes by statutory references from the Laws of Minnesota 2015, chapter 64, sections 1-9. This form must be submitted with the response to this solicitation. A response received without this form, will be rejected.

Minn. Stat. § 16C.285, Subd. 7. **IMPLEMENTATION.** … any prime contractor or subcontractor or motor carrier that does not meet the minimum criteria in subdivision 3 or fails to verify that it meets those criteria is not a responsible contractor and is not eligible to be awarded a construction contract for the project or to perform work on the project…	
Minn. Stat. § 16C.285, Subd. 3. **RESPONSIBLE CONTRACTOR, MINIMUM CRITERIA**. "Responsible contractor" means a contractor that conforms to the responsibility requirements in the solicitation document for its portion of the work on the project and verifies that it meets the following minimum criteria:	
(1)	The Contractor: (i) is in compliance with workers' compensation and unemployment insurance requirements; (ii) is in compliance with Department of Revenue and Department of Employment and Economic Development registration requirements if it has employees; (iii) has a valid federal tax identification number or a valid Social Security number if an individual; and (iv) has filed a certificate of authority to transact business in Minnesota with the Secretary of State if a foreign corporation or cooperative.
(2)	The contractor or related entity is in compliance with and, during the three-year period before submitting the verification, has not violated section 177.24, 177.25, 177.41 to 177.44, 181.13, 181.14, or 181.722, and has not violated United States Code, title 29, sections 201 to 219, or United States Code, title 40, sections 3141 to 3148. For purposes of this clause, a violation occurs when a contractor or related entity: (i) repeatedly fails to pay statutorily required wages or penalties on one or more separate projects for a total underpayment of $25,000 or more within the three-year period, provided that a failure to pay is “repeated” only if it involves two or more separate and distinct occurrences of underpayment during the three-year period; (ii) has been issued an order to comply by the commissioner of Labor and Industry that has become final; (iii) has been issued at least two determination letters within the three-year period by the Department of Transportation finding an underpayment by the contractor or related entity to its own employees; (iv) has been found by the commissioner of Labor and Industry to have repeatedly or willfully violated any of the sections referenced in this clause pursuant to section 177.27; (v) has been issued a ruling or findings of underpayment by the administrator of the Wage and Hour Division of the United States Department of Labor that have become final or have been upheld by an administrative law judge or the Administrative Review Board; or (vi) has been found liable for underpayment of wages or penalties or misrepresenting a construction worker as an independent contractor in an action brought in a court having jurisdiction. Provided that, if the contractor or related entity contests a determination of underpayment by the Department of Transportation in a contested case proceeding, a violation does not occur until the contested case proceeding has concluded with a determination that the contractor or related entity underpaid wages or penalties;*

(3)	The contractor or related entity is in compliance with and, during the three-year period before submitting the verification, has not violated section 181.723 or chapter 326B. For purposes of this clause, a violation occurs when a contractor or related entity has been issued a final administrative or licensing order;*
(4)	The contractor or related entity has not, more than twice during the three-year period before submitting the verification, had a certificate of compliance under section 363A.36 revoked or suspended based on the provisions of section 363A.36, with the revocation or suspension becoming final because it was upheld by the Office of Administrative Hearings or was not appealed to the office;*
(5)	The contractor or related entity has not received a final determination assessing a monetary sanction from the Department of Administration or Transportation for failure to meet targeted group business, disadvantaged business enterprise, or veteran-owned business goals, due to a lack of good faith effort, more than once during the three-year period before submitting the verification;*
	* Any violations, suspensions, revocations, or sanctions, as defined in clauses (2) to (5), occurring prior to July 1, 2014, shall not be considered in determining whether a contractor or related entity meets the minimum criteria.
(6)	The contractor or related entity is not currently suspended or debarred by the federal government or the state of Minnesota or any of its departments, commissions, agencies, or political subdivisions that have authority to debar a contractor; and
(7)	All subcontractors and motor carriers that the contractor intends to use to perform project work have verified to the contractor through a signed statement under oath by an owner or officer that they meet the minimum criteria listed in clauses (1) to (6).

Minn. Stat. § 16C.285, Subd. 5. **SUBCONTRACTOR VERIFICATION**.

A prime contractor or subcontractor shall include in its verification of compliance under subdivision 4 a list of all of its first-tier subcontractors that it intends to retain for work on the project. Prior to execution of a construction contract, and as a condition precedent to the execution of a construction contract, the apparent successful prime contractor shall submit to the contracting authority a supplemental verification under oath confirming compliance with subdivision 3, clause (7). Each contractor or subcontractor shall obtain from all subcontractors with which it will have a direct contractual relationship a signed statement under oath by an owner or officer verifying that they meet all of the minimum criteria in subdivision 3 prior to execution of a construction contract with each subcontractor.

If a prime contractor or any subcontractor retains additional subcontractors on the project after submitting its verification of compliance, the prime contractor or subcontractor shall obtain verifications of compliance from each additional subcontractor with which it has a direct contractual relationship and shall submit a supplemental verification confirming compliance with subdivision 3, clause (7), within 14 days of retaining the additional subcontractors.

A prime contractor shall submit to the contracting authority upon request copies of the signed verifications of compliance from all subcontractors of any tier pursuant to subdivision 3, clause (7). A prime contractor and subcontractors shall not be responsible for the false statements of any subcontractor with which they do not have a direct contractual relationship. A prime contractor and subcontractors shall be responsible for false statements by their first-tier subcontractors with which they have a direct contractual relationship only if they accept the verification of compliance with actual knowledge that it contains a false statement.

Subd. 5a. **Motor carrier verification.** A prime contractor or subcontractor shall obtain annually from all motor carriers with which it will have a direct contractual relationship a signed statement under oath by an owner or officer verifying that they meet all of the minimum criteria in subdivision 3 prior to execution of a construction contract with each motor carrier. A prime contractor or subcontractor shall require each such motor carrier to provide it with immediate written notification in the event that the motor carrier no longer meets one or more of the minimum criteria in subdivision 3 after submitting its annual verification. A motor carrier shall be ineligible to perform work on a project covered by this section if it does not meet all the minimum criteria in subdivision 3. Upon request, a prime contractor or subcontractor shall submit to the contracting authority the signed verifications of compliance from all motor carriers providing for-hire transportation of materials, equipment, or supplies for a project.

Minn. Stat. § 16C.285, Subd. 4. **VERIFICATION OF COMPLIANCE.**
A contractor responding to a solicitation document of a contracting authority shall submit to the contracting authority a signed statement under oath by an owner or officer verifying compliance with each of the minimum criteria in subdivision 3, with the exception of clause (7), at the time that it responds to the solicitation document. A contracting authority may accept a signed statement under oath as sufficient to demonstrate that a contractor is a responsible contractor and shall not be held liable for awarding a contract in reasonable reliance on that statement. A prime contractor, subcontractor, or motor carrier that fails to verify compliance with any one of the required minimum criteria or makes a false statement under oath in a verification of compliance shall be ineligible to be awarded a construction contract on the project for which the verification was submitted. A false statement under oath verifying compliance with any of the minimum criteria may result in termination of a construction contract that has already been awarded to a prime contractor or subcontractor or motor carrier that submits a false statement. A contracting authority shall not be liable for declining to award a contract or terminating a contract based on a reasonable determination that the contractor failed to verify compliance with the minimum criteria or falsely stated that it meets the minimum criteria. A verification of compliance need not be notarized. An electronic verification of compliance made and submitted as part of an electronic bid shall be an acceptable verification of compliance under this section provided that it contains an electronic signature as defined in section 325L.02, paragraph (h).

CERTIFICATION	
By signing this document I certify that I am an owner or officer of the company, and I swear under oath that: **1) My company meets each of the Minimum Criteria to be a responsible contractor as defined herein and is in compliance with Minn. Stat. § 16C.285, and** **2) if my company is awarded a contract, I will submit Attachment A-1 prior to contract execution, and** **3) if my company is awarded a contract, I will also submit Attachment A-2 as required.**	
Authorized Signature of Owner or Officer:	**Printed Name:**
Title:	**Date:**
Company Name:	

NOTE: Minn. Stat. § 16C.285, Subd. 2, (c) If only one prime contractor responds to a solicitation document, a contracting authority may award a construction contract to the responding prime contractor even if the minimum criteria in subdivision 3 are not met.

ATTACHMENT A-1

FIRST-TIER SUBCONTRACTORS LIST

SUBMIT PRIOR TO EXECUTION OF A CONSTRUCTION CONTRACT

STATE PROJECT NUMBER: _____

Minn. Stat. § 16C.285, Subd. 5. A prime contractor or subcontractor shall include in its verification of compliance under subdivision 4 a list of all of its first-tier subcontractors that it intends to retain for work on the project. Prior to execution of a construction contract, and as a condition precedent to the execution of a construction contract, the apparent successful prime contractor shall submit to the contracting authority a supplemental verification under oath confirming compliance with subdivision 3, clause (7). Each contractor or subcontractor shall obtain from all subcontractors with which it will have a direct contractual relationship a signed statement under oath by an owner or officer verifying that they meet all of the minimum criteria in subdivision 3 prior to execution of a construction contract with each subcontractor.

FIRST TIER SUBCONTRACTOR NAMES* (Legal name of company as registered with the Secretary of State)	**Name of city where company home office is located**

*Attach additional sheets as needed for submission of all first-tier subcontractors.

SUPPLEMENTAL CERTIFICATION FOR ATTACHMENT A-1	
By signing this document I certify that I am an owner or officer of the company, and I swear under oath that: **All first-tier subcontractors listed on attachment A-1 have verified through a signed statement under oath by an owner or officer that they meet the minimum criteria to be a responsible contractor as defined in Minn. Stat. § 16C.285.**	
Authorized Signature of Owner or Officer:	**Printed Name:**
Title:	**Date:**
Company Name:	

ATTACHMENT A-2

ADDITIONAL SUBCONTRACTORS LIST

PRIME CONTRACTOR TO SUBMIT AS SUBCONTRACTORS ARE ADDED TO THE PROJECT

STATE PROJECT NUMBER: _____

This form must be submitted to the Project Manager or individual as identified in the solicitation document.

Minn. Stat. § 16C.285, Subd. 5. … If a prime contractor or any subcontractor retains additional subcontractors on the project after submitting its verification of compliance, the prime contractor or subcontractor shall obtain verifications of compliance from each additional subcontractor with which it has a direct contractual relationship and shall submit a supplemental verification confirming compliance with subdivision 3, clause (7), within 14 days of retaining the additional subcontractors. …

ADDITIONAL SUBCONTRACTOR NAMES* (Legal name of company as registered with the Secretary of State)	**Name of city where company home office is located**

*Attach additional sheets as needed for submission of all additional subcontractors.

SUPPLEMENTAL CERTIFICATION FOR ATTACHMENT A-2	
By signing this document I certify that I am an owner or officer of the company, and I swear under oath that: **All additional subcontractors listed on Attachment A-2 have verified through a signed statement under oath by an owner or officer that they meet the minimum criteria to be a responsible contractor as defined in Minn. Stat. § 16C.285.**	
Authorized Signature of Owner or Officer:	**Printed Name:**
Title:	**Date:**
Company Name:	

AFFIDAVIT AND INFORMATION REQUIRED OF BIDDERS

Affidavit of Non-Collusion:

I hereby swear (or affirm) under penalty of perjury:

1) That I am the bidder (if the bidder is an individual), a partner in the bidder (if the bidder is a partnership), or an officer or employee of the bidding corporation having authority to sign on its behalf (if the bidder is a corporation);

2) That the attached bid or bids have been arrived at by the bidder independently and have been submitted without collusion with and without agreement, understanding, or planned common course of action with any other vendor of materials, supplies, equipment or services described in the invitation to bid, designed to limit independent bidding or competition;

3) That the contents of the bid or bids have not been communicated by the bidder or its employees or agents to any person not an employee or agent of the bidder or its surety on any bond furnished with the bid or bids and will not be communicated to any such person prior to the official opening of the bid or bids;

4) That a family relationship between a City of Duluth employee and bidder/proposer are in non-collusion; and

5) That I have fully informed myself regarding the accuracy of the statements made in this affidavit.

Signed: _____

Firm Name: _____

Subscribed and sworn to me before this _____ day of _____, _____

NOTARY PUBLIC _____

My commission expires: _____

Bidder's Federal Identification Number _____

CONTRACTOR
&
CITY OF DULUTH

THIS AGREEMENT, effective as of the date of attestation by the City Clerk, is made by and between the **CITY OF DULUTH**, a municipal corporation, hereinafter referred to as the "CITY," party of the first part, and **Contractor, address,** hereinafter referred to as the "Contractor," party of the second part;

WITNESSETH: That the Contractor and the City agree as follows:

1. The following shall be deemed to be part of this contract:
   a. The annexed resolution and legal advertisement of the City Council.
   b. The bid request and specifications, as modified by irreconcilable language in this written contract.
   c. The bid by Contractor, as modified by irreconcilable language in this written contract.
   d. The performance bond and payment bond certification.
   e. All provisions of law applicable to a contract of this nature.

2. The Contractor agrees to furnish and deliver to the Department all labor, supervision, material, equipment, supplies, insurance, performance bond, payment bond and everything else necessary for general construction of Project at location, all in strict accordance with plans and specifications prepared by design co. or city architect, your bid of $ and resolution no. passed on date. Contractor shall not commence performance of any work under this contract until Contractor receives authorization from the City's Purchasing Agent in writing and dated.

3. The City agrees to pay progress payments and make final payments to the Contractor as stated in the contract specifications. The total amount payable under this contract shall not exceed **dollar amount spelled out ($)** unless the contract is modified by formal amendment or change order. Payments under this Agreement shall be made from the following funding and RQ no. Due to the dollar amount of this contract, a Project Labor Agreement is or is not included as part of this contract (City Code Section 2-29).

4. The Contractor shall furnish and maintain in full force and effect until this contract is completely performed by the Contractor, a performance bond and payment bond if and when required by law, or if and when required by the City.

5. Inasmuch as this contract concerns work, materials and equipment needed for the public benefit, the provisions of this contract relating to the time of performance and completion of work and delivery of materials or equipment are of the essence of this contract.

6. The Contractor will defend, indemnify and save the City harmless from all costs, charges, damages, and loss of any kind that may grow out of the matters covered by this contract.

DRAFT

Said obligation does not include indemnification of the City for claims of liability arising out of the sole negligent or intentional acts or omissions of City but shall include but not be limited to the obligation to defend, indemnify and save harmless the City in all cases where claims of liability against the City arise out of acts or omissions of City which are derivative of the negligence or intentional acts or omissions of Contractor such as, and including but not limited to, the failure to supervise, the failure to warn, the failure to prevent such act or omission by Contractor and any other such source of liability. In addition Contractor will comply with all local, state and federal laws, rules and regulations applicable to this contract and to the work to be done and things to be supplied hereunder.

7. Insurance

a. Contractor shall provide the following minimum amounts of insurance from insurance companies authorized to do business in the state of Minnesota, which insurance shall indemnify Contractor and City from all liability described in Paragraph 6 above, subject to provisions below.

(1) Workers' compensation insurance in accordance with the laws of the State of Minnesota.

(2) Public Liability and Automobile Liability Insurance with limits not less than **$1,500,000** Single Limit, and twice the limits provided when a claim arises out of the release or threatened release of a hazardous substance; shall be in a company approved by the city of Duluth; and shall provide for the following: Liability for Premises, Operations, Completed Operations, Independent Contractors, and Contractual Liability.

(3) City of Duluth shall be named as **Additional Insured** under the Public Liability, Excess/Umbrella Liability* and Automobile Liability, or as an alternate, Contractor may provide Owners-Contractors Protective policy, naming itself and the City of Duluth. Contractor shall also provide evidence of Statutory Minnesota Workers Compensation Insurance. Contractor to provide Certificate of Insurance evidencing such coverage with 30-days' notice of cancellation, non-renewal or material change provisions included. The City of Duluth does not represent or guarantee that these types or limits of coverage are adequate to protect the Contractor's interests and liabilities.

**An umbrella policy with a "following form" provision is acceptable if written verification is provided that the underlying policy names the City of Duluth as an additional insured.*

(4) If a certificate of insurance is provided, the form of the certificate shall contain an unconditional requirement that the insurer notify the City without fail not less than 30 days' prior to any cancellation, non-renewal or modification of the policy or coverages evidenced by said certificate and shall further provide that failure to give such notice to City will render any such change or changes in said policy or coverages ineffective as against the City.

(5) The use of an "ACORD" form as a certificate of insurance shall be accompanied by two forms – 1) ISO Additional Insured Endorsement (CG-2010 pre-2004) and 2) Notice of Cancellation Endorsement (IL 7002) or equivalent, as approved by the Duluth City Attorney's Office.

b. The insurance required herein shall be maintained in full force and effect during the life of this Agreement and shall protect Contractor, its employees, agents and representatives from claims and damages including but not limited to personal injury and death and any act or failure to act by Contractor, its employees, agents and representatives in the negligent performance of work covered by this Agreement.

c. Certificates showing that Contractor is carrying the above described insurance in the specified amounts shall be furnished to the City prior to the execution of this Contract and a certificate showing continued maintenance of such insurance shall be on file with the City during the term of this Contract.

d. Contractor shall be required to provide insurance meeting the requirements of this Paragraph 7 unless Contractor successfully demonstrates to the satisfaction of the City Attorney, in the exercise of his or her discretion, that such insurance is not reasonably available in the market. If Contractor demonstrates to the satisfaction of the City Attorney that such insurance is not reasonably available, the City Attorney may approve an alternative form of insurance which is reasonably available in the market which he or she deems to provide the highest level of insurance protection to the City which is reasonably available.

8. No claim whatsoever shall be made by the Contractor against any officer, agent or employee of the City for, or on account of, anything done, or omitted to be done, in connection with this contract. If this contract is not made in conformity with mandatory provisions of any statute or of the ordinances and charter of the City of Duluth, the Contractor agrees to raise no defense and make no claim against the City on the basis of ratification, laches, estoppel, or implied contract.

9. The Contractor shall not assign, transfer, convey or otherwise dispose of this contract, or his right to execute it, or his right, title or interest in or to it, or any part thereof, without the consent of the City, evidenced by a resolution duly adopted by the City Council. The prohibition contained in this paragraph shall not be deemed to prevent the contractor from subcontracting. Contractor shall remain primarily responsible for all work performed by any subcontractor.

10. The Contractor agrees that in the hiring of common or skilled labor for the performance of any work under this contract, Contractor will not discriminate by reason of race, creed or color, religion, national origin, sex, marital status, status with regard to public assistance, disability or age.

11. The Contractor agrees that Contractor shall not in any manner discriminate against or intimidate or prevent the employment of any person or persons, or on being hired, prevent or conspire to prevent any person or persons from the performance or work under this contract on account of race, creed or color, religion, national origin, sex, marital status, status with regard to public assistance, disability or age.

12. The contractor agrees that, as provided in Minnesota Statutes 16C.05, Subd. 5, contractor's books, records, documents, and accounting procedures and practices are subject to examination by the City or the state auditor for six years from the date of final payment under this contract.

13. This contract may be cancelled or terminated by the City and all moneys due or to become due hereunder may be forfeited for any failure to perform any terms or conditions of this contract including but not limited to any violation of the terms or conditions of Section 10 or 11 of this contract.

14. Any waiver by any party of any provision of this contract shall not imply a subsequent waiver of that or any other provision.

15. This contract is made in the state of Minnesota and shall be construed and interpreted in accordance with the laws of the State of Minnesota. The appropriate venue and jurisdiction for any litigation hereunder shall be in a court located in St. Louis, County, Minnesota, and the parties to this Agreement waive objection to the jurisdiction of this court, whether based on convenience or otherwise.

16. This Agreement constitutes the entire agreement between the City and the Contractor on the subject matter hereof. It may not be changed, modified, discharged or extended except by written instrument duly executed on behalf of the City and the Contractor. The Contractor agrees that no representations or warranties made by the City shall be binding upon the City unless expressed in writing herein.

17. This Agreement shall not be in force and effect, or in any way binding upon the City until the same shall have been approved by the Department Head, signed by the Mayor, attested by the Clerk, and countersigned by the City Auditor.

18. The Contractor unconditionally guarantees to perform all work pursuant to this contract in a good and workmanlike manner, in strict compliance with the specifications and instructions hereto attached, and to the satisfaction of the City of Duluth.

19. This Agreement may be executed in counterparts, each of which shall be deemed to be original and all of which together shall constitute the binding and enforceable agreement of the parties hereto. This Agreement may be executed and delivered by a party by facsimile or PDF transmission, which transmission copy shall be considered an original and shall be binding and enforceable against such party.

Countersigned:

_____
City Auditor
Approved this_____day of _____

_____
Department Director
Approved this_____day of _____

_____
Purchasing Agent
Approved this_____day of _____

_____
Assistant City Attorney
Approved this_____day of _____

CITY OF DULUTH-Client

By

_____
Mayor

Attest:

_____
City Clerk
Attested this_____day of _____

CONTRACTOR/COMPANY
Contractor

By

_____
Company Representative

Its

_____
Title of Representative
Approved this_____day of _____

EQUAL EMPLOYMENT OPPORTUNITY EEO AFFIRMATIVE ACTION
POLICY STATEMENT & COMPLIANCE CERTIFICATE

TO: City of Duluth, MN PROJECT NUMBER & DESCRIPTION _____

_____

FROM: _____

_____
(Vendor's name, address, telephone number)

A) Employment: It is the policy of the above named FIRM to afford equal opportunity for employment to all individuals regardless of race, color, creed, religion, national origin, ancestry, age, sex, marital status, status with respect to public assistance and/or disability. The FIRM will take affirmative action to ensure that we will: (1) recruit, hire, and promote all job classifications without regard to race, color, creed, religion, national origin, ancestry, age, sex, marital status, status with respect to public assistance, and/or disability, except where sex is a bona fide occupational qualification; (2) base decisions on employment so as to further the principle of equal employment opportunity; (3) ensure that promotion decisions are in accord with the principles of equal employment opportunity by imposing only valid requirements for promotional opportunities; (4) ensure that all personnel actions such as compensation, benefits, transfers, layoffs, return from layoff, FIRM sponsored training, education tuition assistance, social and recreational programs will be administered without regard to race, color, creed, religion, national origin, ancestry, age, sex, marital status, status with respect to public assistance, and/or disability. The FIRM also intends full compliance with Veteran affirmative action requirements. Additionally, minority and female employees shall be encouraged to participate in all FIRM activities and refer applicants.

I have designated (name) _____to direct the establishment of and to monitor the implementation of personnel procedures to guide the FIRM's affirmative action program. Where PROJECTS exceed $500,000, this official shall also serve as the liaison officer that administers the FIRM's "Minority Business Enterprise Program." This official is charged with designing and implementing audit and reporting systems that will keep management informed on a monthly basis of the status of the equal opportunity area.

Supervisors have been made to understand that their work performance is being evaluated on the basis of their equal opportunity efforts and results, as well as other criteria. It shall be the responsibility of the FIRM and its supervisors to take actions to prevent harassment of employees placed through affirmative action efforts.

B) Reports: Unless exempted by law and regulation, the FIRM shall make available and file those reports related to equal opportunity as may be required by the City of Duluth and State and Federal compliance agencies. Requirements and Reports are defined in 41CFR60 "Compliance Responsibility for Equal Opportunity" published by the U. S.Department of Labor which is incorporated herein by reference. Additional requirements are defined in various State and Federal Civil Rights Legislation and Rules promulgated thereunder.

C) Nonsegregated Facilities: The FIRM certifies that it does not maintain or provide for its employees any segregated facilities at any of its establishments and that it does not permit its employees to perform their services at any location, under its control, where segregated facilities are maintained. The FIRM certifies that it will not maintain or provide for its employees any segregated facilities at any of its establishments and that it will not permit its employees to perform their services at any location, under its control, where segregated facilities are maintained. The FIRM agrees that a breach of this certification is a violation of the Equal Opportunity Clause in this certificate. As used in this Certification, the term "segregated

facilities" means any waiting rooms, work area, rest rooms and wash rooms, restaurants and other eating areas, time clocks, locker rooms and other storage or dressing areas, parking lots, drinking fountains, recreation for entertainment area, transportation, and housing facilities provided for employees which are segregated by explicit directive or are, in fact, segregated on the basis of race, color, religion, or national origin, because of habit, local custom, or otherwise.

D) Affirmative Action Compliance Program: Unless exempted by regulation and law, the FIRM–if the FIRM has 50 or more employees and if the value of current contracts with the City of Duluth exceeds $50,000–shall prepare and maintain a written affirmative action compliance program that meets the requirement as set forth in 41CFR60.

E) Non-Compliance: The FIRM certifies that it is not currently in receipt of any outstanding letters of deficiencies, show cause, probable cause, or other such notification of non-compliance with EEO Laws and Regulations.

F) Employment Goals - "Construction" Projects: It shall be the goal of the FIRM if the PROJECT is of a construction nature that in all on-site employment generated that no less than 3% of the on-site workforce will be minority employees and that no less than 7% of the on-site workforce will be female employees. Further, it is the goal of the FIRM if the PROJECT is of a construction nature that in all on-site employment generated that no less than 3% of the work hours generated shall be worked by minority employees and that no less than 7% of the work hours generated shall be worked by female employees.

G) Subcontractors: The FIRM will for all its PROJECT subcontractors regardless of tier (unless exempted by law and regulation) that received in excess of $2,500 require that: (1) the subcontractor shall execute an "EEO Statement and Certification" similar in nature to this "Statement and Certification", (2) said documentation to be maintained on file with the FIRM or subcontractor as may be appropriate.

Executed this _____ day of _____, 20__ by:

_____

Printed name and title

_____

Signature

NOTE: In addition to the various remedies prescribed for violation of Equal Opportunity Laws, the penalty for false statements is prescribed in 18 U.S.C. 1001.

CITY OF DULUTH - PART II -

SUPPLEMENTARY GENERAL CONDITIONS FOR FEDERALLY, STATE OF MINNESOTA, AND/OR CITY ASSISTED ACTIVITIES

(revised 4/15/11)

The following conditions take precedence over any conflicting conditions in this Contract.

Section	Title
1	Restrictions on Disbursements, Subcontractors Federal Agency Requirements, Separability, Property
2	Miscellaneous Provisions
3	Definitions
4	Environmental Provisions
5	Contract Compliance
6	Records, Reports and Information, Audits and Inspections
7	Conflict of Interest and Lobbying
8	Labor Standards - Physical Improvement Projects
9	Minnesota Department of Transportation Specification 1960 Partial Payments
10	Housing and Urban Development (HUD) Section 4010
11	Equal Opportunity and Affirmative Action
12	Employment Opportunities - "HUD Section 3"
13	Federal Requirements for Minority/Women Business Enterprises Contract Guidance - MPFA
14	Forms

E-Mail Addresses

For ease in communication, the e-mail address of the person(s) responsible for preparing certified payroll reports (CPRs) is required from the prime contractor and all subcontractors (regardless of tier). This information will be provided to the project engineer prior to the pre-construction meeting OR with materials required in the Letter of Intent.

Section I

Restrictions on Disbursements

No money under this Contract shall be disbursed by the City to any Contractor except pursuant to a written contract which incorporates the applicable PART II, Supplementary General Conditions for Federally, State of Minnesota, and/or City Assisted Activities, and unless the Contractor is in compliance with the Federal Agency requirements with regard to accounting and fiscal matters to the extent they are applicable.

Subcontractors

(A) The Contractor shall include in any subcontract the clauses set forth in the PART II, Supplementary General Conditions for Federally, State of Minnesota and/or City Assisted Activities in their entirety and also a clause requiring the subcontractors to include these clauses in any lower tier subcontracts which they may enter into, together with a clause requiring this insertion in any further subcontracts that may in turn be made.

(B) The Contractor shall not subcontract any part of the work covered by this Contract or permit subcontracted work to be further subcontracted without the City's prior written approval of the subcontractors. The City will not approve any subcontractor for work covered by this Contract who is at the time ineligible under the provisions of any applicable regulations issued by a Federal Agency or the Secretary of Labor, United States Department of Labor, to receive an award of such subcontract.

Federal Agency Requirements

Unearned payments under this Contract may be suspended or terminated upon refusal to accept any additional conditions that may be imposed by the Federal Agency at any time; or if the grant, if applicable, to the City under which this Contract is made is suspended or terminated.

Separability

If any provisions of this Contract is held invalid, the remainder of this Contract shall not be affected thereby if such remainder would then continue to conform to the terms and requirements of applicable law.

Property

Acquisition, use, and disposal of all property, materials and goods acquired as a result of activities made possible by this Contract shall be accomplished in accordance with the applicable provisions of Federal Management Circular (FMC)-74-7, as amended.

Section 2

Miscellaneous Provisions

(A) **Copyrights.** In the event this Contract results in a book or other copyrightable material, the author is free to copyright the work, but Federal Agency and the City reserve a royalty-free, nonexclusive, and irrevocable license to reproduce, publish or otherwise use, all copyrighted material and all material which can be copyrighted.

(B) **Patents.** Any discovery or invention arising out of or developed in the course of work aided by this Contract shall be promptly and fully reported to the Federal Agency and the City for determination by the Federal Agency as to whether patent protection on such invention or discovery shall be sought and how the rights in the invention or discovery, including rights under any patent issued thereon, shall be disposed of and administered in order to protect the public interests.

(C) **Political Activity Prohibited.** None of the funds, materials, property or services provided directly or indirectly under this Contract shall be used in the performance of this Contract on any partisan political activity, or to further the election or defeat of any candidate for public office.

(D) **Lobbying Prohibited.** None of the funds under this Contract shall be used for publicity or propaganda purposes designed to support or defeat legislation pending before the Congress or the City.

(E) **Prohibition of and Elimination of Lead-Based Paint Hazard.** Notwithstanding any other provision, the Agency and Contractor agree to comply with the regulation issued by the Secretary of Housing and Urban Development set forth in 37 F. R. 22732-3 and all applicable rules and orders issued thereunder which prohibit the use of lead-based paint in residential structures undergoing Federally assisted construction or rehabilitation and require the elimination of lead-based paint hazards. Every contract or subcontract, including paint, pursuant to which such Federally assisted construction or rehabilitation is performed shall include appropriate provisions prohibiting the use of lead-based paint.

(F) **Architectural Barriers Act.** The design for and construction of any facility funded in whole or in part by this Contract shall be in conformance with the American Standard Specification for Making Buildings and Facilities Accessible and Usable by the Physically Handicapped, Number A-117.1-1971, as modified.

(G) **Relocation and Acquisition.** Any relocation or acquisition resulting from activities funded in whole or in part by this Contract shall be in conformance with the provisions of the Uniform Relocation Assistance and Real Property Acquisition Policies Act of 1970 (40 U.S.C. 4601) and the implementing regulations 24CFR Part 42.

(H) **Prohibition Against Payments of Bonus or Commission.** The assistance provided under this Contract shall not be used in the payment of any bonus or commission for the purpose of obtaining Federal Agency approval for such assistance, or Federal Agency approval of applications for additional assistance, or any other approval or concurrence of a Federal Agency required under this Contract, Federal Law or Federal Regulations thereto; provided, however, that reasonable fees or bonafide technical, consultant, managerial or other such services, other than actual solicitation, are not hereby prohibited if otherwise eligible as project costs.

(I) **Hatch Act.** Where applicable, the Contractor will comply with the provisions of the Hatch Act which limits the political activity of the Contractor's employees.

Section 3
Definitions

(A) City means the City of Duluth, Contracting Officer, or other persons authorized to act on behalf of the City of Duluth.

(B) Contracting Officer is the delegated representative of the City who has the responsibility for administering the Project.

(C) Contractor means an entity, whether public or private, which furnishes (other than standard commercial supplies, office space or printing services) to the City, products, services or supplies as described in this project Contract.

(D) Federal Agency means the United States, the District of Columbia, and any executive department, independent establishment, administrative agency, or instrumentality of the United States or of the District of Columbia, including any corporation, all or substantially all of the stock of which is beneficially owned by the United States, by the District of Columbia, or by any of the foregoing departments, establishments, agencies, and instrumentalities. The term Federal Agency shall also include the person or persons authorized to act on behalf of said Federal Agency.

(E) Project means the activities to be undertaken by the Contractor as described in this Contract, which from time to time may be amended by mutual consent of the City and Contractor.

(F) Subcontractor means an entity, regardless of tier, which has entered into an agreement with the Contractor or another Subcontractor, to undertake certain Project activities as described in that agreement.

(G) The term labor standards, as used in the Contract, means the requirements of the Davis-Bacon Act, the Contract Work Hours and Safety Standards Act (other than those relating to safety and health), the Copeland Act, and the prevailing wage provisions of the other statutes listed in 20 CFR 5.1.

(H) Work means all labor necessary to produce the construction required by the Contract Documents, all materials and equipment incorporated or to be incorporated in such construction, products, services, or supplies required by the Contract Documents, or any other requirements set forth in the Contract.

(I) Additional Definitions, that are applicable to the Labor Standards provisions - Section 8 - of this Contract can be found in 29CFR5.2 as published by the U.S. Department of Labor and said definitions are hereby incorporated by reference into the provisions of this Contract.

Section 4
Environmental Provisions

(A) The Contractor agrees to follow the regulations, requirements, policies, goals and procedures set forth by the Council on Environmental Quality (CEQ) under provisions of the National Environmental Policy Act (NEPA) (Pub. L 91-190, 42 U.S.C. 4321 et seq.), Executive Order 11514, and 40 CFR Part 1500.

(B) **Historic Properties.** The Contractor agrees to follow the regulations, requirements, policies, goals, and procedures set forth under provisions of the National Historic Preservation Act of 1966 (Pub. L. 89-665); Preservation of Historic and Archeological Data Act of 1974 (Pub. L. 93-291); Executive Order 11593; 36 CFR , Part 800 and applicable State legislation or regulations.

(C) **Coastal Zones and Wetlands.** The Contractor agrees to follow the regulations, requirements, policies, goals and procedures set forth under provisions of the Coastal Zone Management Act of 1972 (Pub. L. 92-583) and applicable State legislation or regulations.

(D) **Noise.** The Contractor agrees to comply with provisions set forth in the U.S. Department of Housing and Urban Development Handbook 1390.2, Noise Abatement and Control, Department Policy, Responsibility and Standards, 1971.

(E) **Flood Plain.** The Contractor agrees to comply with the provisions set forth in the Flood Disaster Protection Act of 1973 (Pub. L. 93-234) and implementing regulations; Title 24, Chapter X, Subchapter B, National Flood Insurance Program, Executive Order 11296, and Executive Order 11988 relating to the evaluation of flood hazards.

(F) **Air Quality.** The Contractor agrees to comply with provisions set forth in the Clean Air Act (Pub. L. 90-148) and Clean Air Act Amendments of 1970 (Pub. L. 91-604); and applicable U.S. Environmental Protection Agency implementing regulations.

(G) **Water Quality.** The Contractor agrees to comply with the provisions set forth in the Federal Water Pollution Control Act (Pub. L. 92-500) and applicable U.S. Environmental Protection Agency implementing regulations, and Executive Order 11288 relating to the prevention, control, and abatement of water pollution.

(H) **Wildlife.** The Contractor agrees to comply with the provisions of the Fish and Wildlife Coordination Act (Pub. L. 85-264).

Section 5
Contract Compliance

(A) In the event of the Contractor's noncompliance with the provisions of this Contract or with any of the said regulations, the City may withhold payment(s) until evidence of compliance by the Contractor has been demonstrated, or the Contract may be canceled, terminated or suspended in whole or in part and the Contractor may be declared ineligible for further City contracts.

(B) In the event the Contract is terminated or canceled as a result of noncompliance with any of the provisions of this Contract, the City may subject to bids the remainder of the Project for which this Contract was made. The City shall have the right upon termination or suspension to withhold all further payments under this

Contract to the Contractor. Upon the award of a new contract for the remainder of the Project, the City shall pay to the Contractor an amount no more than the balance remaining due to the Contractor less the sum of the costs incurred by the City which are necessary in preparing the new bid specifications. In the event the amount paid the Contractor prior to the date of termination or cancellation exceeds the full amount of this Contract less the cost of the new contract and the additional costs mentioned above, the Contractor agrees to reimburse the City for such excess amount within ninety days after the new contract is awarded by the above procedures.

(C) Provisions contained in subparagraph (A) and (B) above shall not be interpreted as precluding any authorized Federal, State, or County governmental unit from exercising their legal administrative or other responsibilities in respect to the enforcement by said governmental units of laws or regulations concerning activities of the Contractor.

Section 6

Records

(A) **Establishment and Maintenance of Records.** Records shall be maintained in accordance with requirements prescribed by the Federal Agency or the City with respect to all matters covered by this Contract. Except as otherwise authorized by the Federal Agency, such records shall be maintained for a period of three years after receipt of final payment under this Contract.

(B) **Documentation of Costs.** All costs shall be supported by properly executed payrolls, time records, invoices, contracts, or vouchers, or other official documentation evidencing in proper detail the nature and propriety of the charges. All checks, payrolls, invoices, contracts, vouchers, orders, or other accounting documents pertaining in whole or in part to this Contract shall be clearly identified and readily accessible.

Reports and Information

At such times and in such forms as the Federal Agency or the City may require, there shall be furnished to the Federal Agency or the City such statements, records, data and information as the Federal Agency or the City may request pertaining to matters covered by this Contract.

Audits and Inspection

At any time during normal business hours and as often as the City, the Federal Agency and/or the Comptroller General of the United States may deem necessary, there shall be made available to the City, the Federal Agency and/or representatives of the Comptroller General for examination of all its records with respect to all matters covered by this Contract and will permit the City, the Federal Agency and/or representative of the Comptroller General to audit, examine and make excerpts or transcripts from such records, and to make audits of all contracts, invoices, materials, payrolls, records of personnel, conditions of employment, and other data relating to all matters covered by this Contract.

Section 7

Conflict of Interest and Lobbying

(A) **Interest of Members, Officers, or Employees of the City, Members of Local Governing Body, or Other Public Officials.** No member, officer, or employee of the City, or its designees or agents, or member of the governing body of the City, during his/her tenure of for one year thereafter, shall have any interest, direct or indirect in any contract or subcontract, or the proceeds thereof, for work to be performed in connection with the Project assisted under this Contract. Any contract in which any of the above indicated individuals becomes directly or indirectly, interested, personally or as a member of a firm, or as an officer, director, or stockholder of a corporation, shall be and become absolutely void; and any money which shall have been paid on such contract by the City may be recovered back from any or all persons interested therein, by a joint action or several actions.

(B) The Contractor agrees that he will incorporate into every contract required to be in writing the following provisions: **Interest of Contractors and Employees** - The Contractor covenants that he presently has no interest and shall not acquire any interest, direct or indirect, in the Project which would conflict in any manner or degree with the performance of this Contract, and no person having any conflicting interest shall be employed. Any interest on the part of the Contractor or his employees must be disclosed to the Federal Agency and the City. Provided, however, that this paragraph shall be interpreted in such a manner so as not to unreasonably impede any statutory requirements that opportunity be provided for employment of and participation by certain residents of a designated geographical are, if applicable.

(C) **Interest of Member or of Delegate to Congress.** No member of or Delegate to Congress, or Resident Commissioner, shall be admitted to any share or part of this Contract or to any benefit that may arise therefrom, but this provision shall not be construed to extend to this Contract if made with a corporation for its general benefit.

(D) The Contractor by signing this document certifies, to the best of his or her knowledge and belief, that:

(1) No Federal appropriated funds have been paid or will be paid, by or on behalf of the Contractor, to any person for influencing or attempting to influence an officer or employee of any agency, a Member of Congress, an officer or employee of Congress, or an employee of a Member of Congress in connection with the awarding of any Federal contract, the making of any Federal grant, the making of any Federal loan, the entering into of any cooperative agreement, and the extension, continuation, renewal, amendment, or modification of any Federal contract, grant, loan, or cooperative agreement.

(2) If any funds other than Federal appropriated funds have been paid or will be paid to any person for influencing or attempting to influence an officer or employee of any agency, a member of Congress, an officer or employee of Congress, or an employee of a Member of Congress in connection with this Federal contract, grant, loan, or cooperative agreement, the Contractor shall complete and submit Standard Form -LLL, "Disclosure Form to Report Lobbying," in accordance with its instructions.

The above certification is a material representation of fact upon which reliance was placed when this transaction was made or entered into. Submission of this certification is a prerequisite for making or entering into this transaction imposed by section 1332, title 31, U.S. Code. Any person who fails to file the required certification shall be subject to a civil penalty of not less than $10,000 and not more than $100,000 for each such failure.

(E) The parties to this Contract certify and agree that they are under no contractual or other disability which would prevent them from complying with the terms of this Contract.

Section 8

Labor Standards - Physical Improvement Projects

Where applicable, there shall be included in all construction, rehabilitation, alteration or repair contracts with private entities made possible by or resulting from this Contract, the following Labor Standards provisions;

(A) **General Requirements.**

(1) **Subcontracts.** The Contractor shall include in any subcontract the clauses set forth in Section 8, **Labor Standards**, in their entirety and also a clause requiring the subcontractors to include these clauses in any Tower tier subcontract which they may enter into, together with a clause requiring this insertion in any further subcontracts that may in turn be made.

(2) The transporting of materials and supplies to or from the site of the Project or Program to which this Contract pertains by the Employees of the Contractor or of any subcontractor, and the manufacturing or furnishing of materials, articles, supplies, or equipment on the site of the Project or Program to which this Contract pertains by persons employed by the Contractor or by any subcontractor, shall for the purpose of this Contract, and without limiting the generality of the foregoing provisions of this Contract, be deemed to be work to which these **Labor Standards** provisions are applicable.

(3) No person under the age of eighteen years shall be employed on work covered by this Contract.

(4) In connection with the performance of work under this Contract, the Contractor agrees not to employ any person undergoing sentence of imprisonment except as provided by Public Law 89-176, September 10, 1955 (18 U.S.C. 4082 (c) (2)) and Executive Order 11755, December 29, 1973.

(5) The Contractor will permit authorized representatives of the Federal Agency and the City to interview employees during working hours on the job.

(6) No employee to whom the wage, salary, or other **Labor Standards** provisions of this Contract are applicable shall be discharged or in any other manner discriminated against by the Contractor or any subcontractor because such employee has filed any complaint or instituted or caused to be instituted any proceeding or has testified or is about to testify in any proceeding under or relating to the Labor Standards applicable under this Contract to his employer.

(B) **Safety Standards.** No Contractor or subcontractor contracting for any part of a construction contract shall require any laborer or mechanic, including apprentices and trainees, employed in the performance of the Contract to work in surroundings or under working conditions which are unsanitary, hazardous or dangerous to his health or safety, as determined under construction safety and health standards promulgated by the Secretary of Labor. The Contractor or subcontractor comply with all the rules, regulations, and relevant orders, promulgated by the Secretary of Labor pursuant to Public Law 91-54.

(C) **Davis-Bacon Act - 29 CFR 5.5**

web site: http://ecfr.gpoaccess.gov/cgi/t/text/text-idx?c=ecfr&tpl=/ecfrbrowse/Title29/29cfr5_main_02.tpl

Refer to Section 10, Page 10 Housing and Urban Development (HUD) form-4010 (06/2009) Ref Handbook 1344.1

City of Duluth "Mini Davis-Bacon"

(D) **City of Duluth - Minimum Wage Ordinance 8940, as Amended.**

(1) On a project (as defined below) funded in whole or in part by federal and/or state funds and/or city of Duluth funds, these local provisions shall prevail in those instances where the requirements of the local provisions are equal to or greater than similar minimum labor standards provisions as set forth in applicable federal and/or state laws and regulations.

(2) In all contracts in excess of $2,000 for projects (as defined below), the Contractor's particular attention is called to Ordinance 8940, effective June 8, 1989, respectively coded as Article IV of Chapter 2 of the Duluth City Code, and entitled "An Ordinance Pertaining to Wages and Working Hours of Persons on Public Works in the City of Duluth", as set forth below:

(3) **Definitions.**

For the purposes of this section the following words and phrases shall have the meanings respectively ascribed to them in this section:

(a) **Basic hourly rate** - The hourly wage paid to any employee.

(b) **Prevailing wage rate** - The basic hourly rate plus fringe benefits prevailing in the city of Duluth as determined by the United States secretary of labor pursuant to the Davis-Bacon act, as amended; provided that whenever employer and employee organizations employing and representing a majority of a class of workers in a particular industry within the city jointly certify that the prevailing basic hourly rate plus fringe benefits of such workers differs from the amount determined by the secretary of labor, the certified rate shall be considered to be the prevailing wage rate for such class of workers in that industry.

(c) **Fringe benefits** - Employer contribution for health and welfare benefits, vacation benefits, pension benefits, and all other economic benefits other than the basic hourly rate.

(d) **Apprentice** - An employee who is working under a training program which is approved either by the U.S. Department of Labor Bureau of Apprenticeship & Training or the Minnesota Director of Voluntary Apprenticeship; see apprentice ratios on pages 6-7 and HUD 4010 in Section 10.

(e) **Trainee** - An employee registered with the U. S. Department of Labor Employment & Training Administration; see HUD 4010 in Section 10.

(e) **Project** - Erection, construction, demolition, painting, remodeling or repairing of any public building, highway, sidewalk, bridge, water or gas line, sewer and sewage treatment facility or other public work performed under contract with the city.

(f) **Labor, mechanic** - All persons utilized, employed or working on a project who are doing work usually done by mechanics and laborers, including proprietors, partners, and members of cooperatives.

(4) **Wage Rates and Hours for City of Duluth Projects.**

(a) Any contract which provides for a project of estimated total cost of over $2,000.00 shall contain a stipulation that no laborer, mechanic or apprentice-trainee employed directly upon the project work site by the contractor or any subcontractor shall be permitted or required to work at a rate of pay less than the prevailing wage rate; nor shall any such employee be permitted or required to work more than 8 hours in any work day **OR** 40 hours in any work week unless he is paid at a rate of at least 1½ times the basic hourly rate for all hours in excess of 8 per day **OR** 40 per week [in other words: all hours in excess of eight per day and all hours after 40 per week] and unless he receives fringe benefits that are at least equal to those in the prevailing wage rate; provided that whenever employer and employee organizations employing and representing a majority of a class of workers in a particular industry within the city jointly certify that the maximum number of hours that such persons may work under existing labor agreements before overtime wages must be paid differs from the hours specified in this paragraph, the maximum number of hours specified in such labor agreements shall be substituted for those specified above in applying the provisions of this paragraph to such workers.

(b) The word "or" in the state statute and the city of Duluth Code refers to the number of hours worked in any one week or, in the alternative, the number of hours worked in any one day in the week (the days in one week being totaled for reporting purposes); the law requires use of the alternative which results in the higher number of overtime hours for each employee whose time is being reported.

EXCEPTIONS: Federal government funding only and HUD (Housing and Urban Development) funding - see point "e'

In summary, if a project is solely funded with city of Duluth monies, city ordinance 8940 as amended allows the employees to work four ten-hour days and be paid at the regular hourly rate for those ten hours; exceeding hours must be paid at the overtime rate. An employer may not withhold overtime payment exclusively until 40 hours per week have been worked. Daily overtime must be paid as it is earned.

- **The base workweek hours must be clearly indicated on each payroll. Employees may be assigned a different workweek; however, that must be clearly marked beside the employees' names.**

The following are examples of how these rules apply to different situations.

TT refers to the total time worked on the day or in the week
RT refers to the hours worked at the regular rate of pay (straight time)
OT refers to the hours worked for which overtime must be paid

State Funded with or without federal funding Projects — City-only Funded Projects (4 ten-hour days)

	Mon	Tues	Wed	Thurs	Fri	Sat	Total		Mon	Tues	Wed	Thurs	Fri	Sat	Total
TT	10	10	10	10	0	6	46		10	10	10	10	0	6	46
RT	8	8	8	8	0	6	38		10	10	10	10	0	0	40
OT	2	2	2	2	0	0	8		0	0	0	0	0	6	6

State Funded with or without federal funding Projects — City-only Funded Projects (4 ten-hour days)

	Mon	Tues	Wed	Thurs	Fri	Sat	Total		Mon	Tues	Wed	Thurs	Fri	Sat	Total
TT	0	10	10	0	7	0	27		10	0	12	0	0	0	32
RT	0	8	8	0	7	0	23		10	0	10	10	0	0	30
OT	0	2	2	0	0	0	4		0	0	2	0	0	0	2

c) **Overtime Calculations**

Minnesota Statutes Chapter 177.42, subd 4 specifies that the prevailing hours of labor may not be more than eight hours per day or more than 40 hours per week (as stated above in (b), the City of Duluth does allow for ten hours per day/40 hours per week with City funding *only*. Example: hours exceeding eight per day are paid at 1.5 times the rate in the contract's wage decision OR the base rate the employee is being paid if it is higher than the required base rate; once 40-hours in any one week are attained, all hours exceeding that 40 are paid at 1.5 times the rate in the project contract's wage decision. See example (1) and (2) below.

Minnesota Statutes Chapter 177.42, subd 5 defines the hourly basic rate as the hourly wage paid to any employee. (subd 6): The prevailing wage rate means the hourly basic rate of pay plus the contribution for health and welfare benefits, vacation benefits, pension benefits, and any other economic benefit paid to the largest number of workers engaged in the same class of labor within the area...

Minnesota Statutes Chapter 177.43, subd 1 (1) ...employees are permitted to work more hours than the prevailing hours of labor [being] paid for all hours in excess of the prevailing hours at a rate of at least 1-½ times the hourly basic rate of pay. (2) A laborer or mechanic may not be paid a lesser rate of wages than the prevailing wage rate in the same or most similar trade or occupation in the area.

An employer may pay a lower **regular time/straight time** hourly rate and higher fringe benefit rate--to a bona fide plan--than stated in the contract's wage decision providing the total of the two rates is equal to or greater than the total in the wage decision; however, the **OVERTIME rate** must be paid on the higher rate in the contract's wage decision.

(1) Overtime Calculation with Fringe Benefits Paid to Bona Fide Plans

For overtime purposes, an employer paying higher fringe benefits to a bona fide plan and paying a lower hourly rate MUST calculate the overtime on the higher hourly rate as stated in the project contract's wage decision. The fringe benefit amount may be reduced to reflect any increase in the total prevailing wage package IF the plan administrator permits such a reduction. This acceptance must be verified in writing by the plan administrator and attached to the appropriate certified payroll report.

(2) Overtime Calculation with Cash Payment of Fringe Benefits

When the fringe benefit is paid directly to an employee, the prevailing base rate and the fringe benefit rate as established in the project contract's wage decision for a specific classification are totaled to arrive at the hourly rate. *Overtime is calculated at 1.5 x the base rate of the wage decision with the fringe benefit amount added to that rate: base rate of the wage decision x 1.5 + fringe benefit rate = overtime rate.*

Contract Work Hours and Safety Standards Act

[Refer to page two of this document.] All projects valued at $100,000 or greater are subject to this Act. As with Minnesota Statutes Chapter 177.43, the overtime rate is calculated as in items one and two above OR (e) below.

(d) A contractor shall not reduce a worker's private, regular rate of pay when the wage rate certified by the U. S. Department of Labor or the Minnesota Department of Labor & Industry is less than the worker's normal hourly wage [Minnesota Statute 181.03 subdivision 1(2)].

(e) **Regular Time & Overtime Definitions**

• **State of Minnesota** funded projects with or without federal funding *only allow for five eight-hour days per week at regular time.* Overtime is calculated at a rate not less than time and one-half (1.5) of the prevailing base rate as stated in the wage decision OR the base rate the employee is being paid if it is higher than the required base rate--plus the straight time fringe benefit amount. (see (1) above for example when a lower base rate and higher fringe are paid)

• **City of Duluth** funded projects do permit four ten-hour work days at regular time–see point 4-a, b for stipulations. Overtime is calculated at a rate not less than time and one-half (1.5) of the prevailing base rate as stated in the wage decision--OR the base rate the employee is being paid if it is higher than the required base rate--plus the straight time fringe benefit amount. (see (1) above for example when a lower base rate and higher fringe are paid)

• **Federal** funded only projects allow overtime pay for hours worked in excess of 40 in a workweek at a rate not less than time and one-half (1.5) of the prevailing base rate as stated in the wage decision OR the base rate the employee is being paid if it is higher than the required base rate--plus the straight time fringe benefit amount.

• **HUD** funded projects allow overtime pay for hours worked in excess of 40 in a workweek at a rate not less than time and one-half (1.5) of the prevailing base rate as stated in the wage decision OR the base rate the employee is being paid if it is higher than the required base rate--plus the straight time fringe benefit amount.

** When a combination of funding sources are included in any one project, the most strict requirements will apply.

(f) The minimum hourly prevailing wages are contained in each project specification. When both federal (general decision rates from the U. S. Department of Labor) and State of Minnesota prevailing wages for state funded construction projects from the Minnesota Department of Labor and Industry are used, the prime contractor and all subcontractors including trucking operations, are required to **pay the higher of the two wages** for all laborers and mechanics [MnDOT Contract Administration Manual, Section 5-591.320].

(g) The prime contractor and any lower-tier subcontractor shall review all wage decisions and compensate a worker according to the type of work performed and at the rate that is the greatest.

(h) State of Minnesota prevailing wages typically list two rates for each classification with two effective dates. Should any City of Duluth contract continue to and past the second effective date, that rate and fringe benefit will be in effect through the remainder of the project.

(i) **Mn/DOT Statement of Compliance is required on all city of Duluth construction projects (regardless of the project funding source) with each weekly certified payroll report.** web site: http://dot.state.mn.us/const/labor/forms.html

(j) All contracts for city projects shall have applicable schedules of prevailing wage rates set forth in the contract. Schedules of applicable prevailing wage rates shall be posted on all project job sites for public review and shall be protected from the weather.

(k) Employees on projects shall be paid at least **weekly**. Fringe benefits shall be paid either in cash or to an employee benefit plan that has been approved by the U.S. Department of Labor. ■ **The fringe benefit package is an integral portion of the prevailing wage. Should the prime contractor or any subcontractor (regardless of tier) become delinquent with any fringe benefit plan administrator's requirements for monthly payment, the monthly estimate(s) may be withheld until the plan payments are made current.** (city ordinance 8940 6-18-89 plus amendments)
See MnDOT Specification 1906 on page nine and Section 5 of this document: Contract Compliance.
See Statement of Compliance and Certified Payroll Report requirements in Section 10, HUD 4010 and web sites in Section 14, Forms.

(l) Any contractor or subcontractor working on a project shall furnish the City with **original** certified payroll reports with **original signatures** relating to the project. Such certified payroll reports shall be **submitted weekly** on U.S. Department of Labor standard forms (WH-347) or their equivalent–using the same format--to the City of Duluth Labor Standards representative. All City of Duluth funded projects must have the base workweek hours indicated on the certified payroll form and/or beside each employee's name (should some employees be working different base workweeks).

(m) No contractor or subcontractor working on a project shall evade or attempt to evade the provisions of this section through the use of non-recognized training programs. The only employees involved in training programs that shall be allowed to work on projects covered by this section shall be apprentice-trainees as defined by this article.

(n) Any person violating the provisions of this section shall be guilty of a misdemeanor with each day of violation constituting a separate offense. In addition, if the prevailing wage rate and accompanying fringe benefit rate is not paid to employees working on a project, the City of Duluth may withhold contract payments to the prime contractor until such deficiencies are corrected. Should fringe benefits be paid to authorized Plans, the payments must be made within the demands of those Plans. Delinquencies may result in withholding of project funds to the prime contractor.

(o) This section shall not apply to contracts for projects where the total cost of the project is less than $2,000.00; nor to materialmen who do no more than deliver materials to the work site, **except** that this section shall apply to employees who deliver asphalt, concrete or mineral aggregate such as sand, gravel or stone where such material is incorporated into the project by depositing the material substantially in place, either directly or through spreaders, from the transporting vehicle.

(5) **Helpers**

A helper may perform work *only* if the helper classification is specified and defined in the federal wage decision and/or State of Minnesota wage decision incorporated into the project contract. Without such a helper classification, the contractor must assign a job classification that is the "same or most similar" [Minnesota Statute 177.44, subdivision 1] and compensate the helper for the actual work performed regardless of the helper's skill level.

(6) **Apprentice Ratios**

Journeyworkers must be on site with the apprentices and their hours must match.

FUNDING SOURCE:

City of Duluth and State of Minnesota with or without Federal funding

- Apprentices are not permitted to work alone under any circumstances.
- Working foremen are acceptable as a journeyworker PROVIDING he/she is in the same classification.
  - » Example: carpenter foreman and carpenter apprentice
- Ratios are determined by the trade's labor agreement.
- In the absence of ratio language, the following State of Minnesota apprenticeship ratios will be applied:
  (apprentice : journeyworker) 1:1 2:4 3:7 4:10, etc.

- Employees working in excess of the allowable ratio must be paid the full journeyworker compensation.
- Out-of-ratio apprentices will be calculated beginning with the **apprentice at the highest level of training** and, then, to less senior apprentices in their rank order.
- Should two or more out-of-ratio apprentices have the same level of training, whomever was on the work site first will receive journeyworker pay; if the apprentices at the same level of training began work on the project site at the same time, hours worked out-of-ratio for which restitution is due will be divided among those apprentices.

Examples:

Four apprentices working unsupervised are on site. [4:0]
Ratio calls for four apprentices and ten journeyworkers [4:10]
Correction: all apprentices will receive the full journeyworker compensation as apprentices are not permitted to work alone.

Three apprentices and two journeyworkers are on site. [3:2]
Ratio calls for three apprentices and seven journeyworkers [3:7]
Two journeyworkers may accompany only one apprentice; therefore, the two highest level apprentices are paid the full journeyworker compensation.
Even though this particular job has three apprentices–the second journeyworker is a mute point; a third journeyworker would also be a mute point in this example.
Correction: the two highest level apprentices are paid the full journeyworker compensation and the third lower level apprentice is considered in ratio.

H U D (CDBG) and Federal funding only

- Apprentices are not permitted to work alone unless the U. S. Department of Labor-approved agreement allows that practice.
- Working foremen are acceptable as a journeyworker PROVIDING he/she is in the same classification.
  » Example: electrician foreman and electrician apprentice
- Ratios are determined by the trade's U. S. Department of Labor-approved agreement.
- In the event of the absence of ratio language in the applicable agreement, the Minnesota Department of Labor ratio of one apprentice for the first journeyworker and one apprentice for each three journeyworkers thereafter will be applied, (i.e., 1:1, 2:4, 3:7, 4:10, etc.).

- The **legal apprentices are those who first came to work on the job site;** in the event that all apprentices begin work on the project site at the same time, hours worked out-of-ratio for which restitution is due will be divided among the apprentices.
- Time cards will be required to substantiate the start times.
- Employees working in excess of the allowable ratio--or for which U. S. Department of Labor-apprentice agreement/certificate is not provided–must be paid the full journeyworker compensation.

Examples:

Four apprentices and one journeyworker are on site. [4:1]
Ratio calls for four apprentices and ten journeyworkers. [4:10]
The first apprentice on site is considered in ratio as one journeyworker may only accompany one apprentice [1:1]; this particular job has four apprentices.
Correction: the second through the fourth apprentices coming on site are paid the full journeyworker compensation.

Six apprentices and two journeyworkers are on site [6:2]
Ratio calls for six apprentices and sixteen journeyworkers [6:16]
The first apprentice on site is considered in ratio as two journeyworkers may only accompany one apprentice; this particular job has six apprentices–the second journeyworker is a mute point.
Correction: the second through sixth apprentices coming on site are paid the full journeyworker compensation.

(7) **Poster Boards**

The prime contractor must construct and display a poster board, which contains all required posters, is legible and is accessible to all workers from the first day of work until the project is 100% complete. Posters must be protected from the weather. Prime contractors are not allowed to place a poster board at an off-site facility location.

(8) **Trucking Issues**

a) For the purpose of sections seven and eight, the term "owner" includes all persons having an ownership interest in the trucking entity or a partnership interest in the trucking entity and has a legal and rightful title to the vehicle(s) or has an approved lease on the vehicle(s). "Operate" means the owner either physically drives the vehicle or hires another to physically drive the vehicle; yet, maintains the right to direct the day-to-day operations of the vehicle.

b) Trucking Operations Definitions: See MN Rule 5200.1106 web site: https://www.revisor.mn.gov/rules/?id=5200.1106

Independent Trucking Operator: an individual or partnership who owns or holds a vehicle under lease and who contracts that vehicle and the owner's services to an entity which provides construction services to a public works project. The individual owns or leases and drives the equipment, is responsible for the maintenance of the equipment, bears all operating costs, determines the details and means of performing the services, and enters into a legally binding agreement that specifies the relationship to be that of an independent contractor and not that of an employee.

Multiple Truck Operations: any legal business entity that owns more than one vehicle and hires the vehicles out for services to brokers or contractors on public works projects. The owners of a trucking firm may either drive the vehicles or hire employees to drive the vehicles. Employee drivers are subject to the appropriate prevailing wage rate. The owner driving a vehicle is obligated to account for the value of his/her services as a driver at the appropriate prevailing wage.

Partnerships: a legal business entity where two or more individuals hold vehicles under lease and contract those vehicles and their services to an entity which provides construction services to a public works project. The partners own or lease the equipment, are responsible for maintenance and all operating costs, drive the equipment, determine the details and means of performing the services, and enter a legally binding agreement that specifies the

relationship to be that of a partner and not that of an employee. All partners are subject to the appropriate prevailing wage per city of Duluth ordinance 8940 as amended.

Corporation: any legal business entity that owns or leases vehicles to provide construction services to public works projects. All individuals are employees of the corporation and subject to the appropriate prevailing wage regardless of title or position.

Broker: an individual or firm who (activities include, but are not limited to):

- contracts to **provide** trucking services [equipment and driver] in the construction industry to users of such services, such as prime contractors and various subcontractors of the prime;
- contracts to **obtain** services from other trucking operations and dispatches them to various assignments;
- receives payment from the users (such as prime contractors and various subcontractors) in consideration for the trucking services provided; and
- makes payment to the providers (trucking operations so contracted with) for their services.

(9) **Specific documentation from trucking operations.**

Independent Trucking Operators

The owner/operator of a truck must submit a copy of his/her commercial driver's license (CDL), cab card, and insurance certificate for each truck the owner/operator drives on each construction project *before commencing work* on that project. These documents must be sent to the prime contractor who will then forward the material to Labor Standards, Engineering Division at the City of Duluth.

Multiple Truck Operators

Weekly certified payrolls and payment of corresponding prevailing wages plus the fringe benefit package will be required for each project where trucks are operating. This covers the owner plus all employees performing work on the project.

Partnerships

Weekly certified payrolls and payment of corresponding prevailing wages plus fringe benefit packages will be required for each project where trucks are operating. This covers all partners of the organization who perform work on the project.

Each partner performing work on a project must submit a copy of his/her commercial driver's license (CDL), cab card, and insurance certificate for the truck being operated with that weekly certified payroll. It is not necessary to repeat such supporting documentation until a different truck is used and/or certificates or licenses have expired.

Employees of the partnership are always reported on a weekly certified payroll and paid the appropriate prevailing wage plus fringe benefit package for the work being performed.

Corporations

All persons employed by the corporation are subject to receive payment of the prevailing wage plus the fringe benefit package for the work performed on a project regardless of title or position. Weekly certified payrolls must be submitted for all work performed on the project.

Brokers

Truck ownership and a **bonafide contract** between the broker and another trucking operation, a prime contractor, or a subcontractor must be identified. Paperwork must be submitted with the month end trucking report to the city of Duluth Labor Standards representative - Engineering. Certified payrolls are not required when the above documentation is provided and approved.

(10) **Month End Trucking Report - ONLY REQUIRED WITH STATE OF MINNESOTA FUNDING**

The Minnesota Department of Transportation Month End Trucking Report Form A and Form B plus Minnesota Department of Transportation Month End Trucking Report Statement of Compliance are *only required on state funded projects*.

A guide for completing the forms including definitions and the reports, themselves, may be downloaded from:

www.dot.state.mn.us/const/labor/forms.html

Payment to the prime contractor may be withheld until documentation is received and approved.

(11) **Truck Rental Rates - ONLY REQUIRED WITH STATE OF MINNESOTA FUNDING**

Truck rental rates are listed in the prevailing wage section of the project specifications.

(12) **Minnesota Rules 5200.1105 and 5200.1106**

These rules are incorporated into this supplementary general conditions part II by reference and are found on these web sites:

www.revisor.mn.gov/rules/?id=5200

(13) **Truck Axles** web site: https://www.revisor.mn.gov/rules/?id=5200.1100

Per Minnesota Rules 5200.1100 Master Job Classifications, a truck "unit" refers to all axles including the steering axle. A tag axle is also counted as one of the axles. Examples: four rear axles plus one steering axle = five axles total one rear axle plus one steering axle = two axles total

(14) **Non-Compliance and Enforcement**

a) The prime contractor shall be liable for any unpaid wages to its workers or those of its lower-tier subcontractors, trucking companies/Multiple Truck Owners (MTO's) and/or Independent Truck Owner/Operator (ITOs) [MnDOT Standard Specifications for Construction, Section 1801].

b) See Section 9, MnDOT Specification 1906 Partial Payments and Section 5, page two of this document.

c) City of Duluth ordinance 8940 as amended.

(15) **IC-134 form - Withholding Affidavit for Contractors**

The IC-134 form will be required from all Multiple Truck Operators, Partnerships, and Corporations performing trucking services on a project before the retainage or all remaining funds can be released. Web site for completing form online: www.mndor.state.mn.us

The form, itself, is found at: and www.taxes.state.mn.us/Forms_and_Instructions/ic134.pdf

(16) **Owners, Supervisors, Foremen listed on certified payrolls.**

All persons working on a City of Duluth project including owners, partners, supervisors, salaried persons, and working foremen who perform laborer and/or mechanic work shall be reported on the weekly certified payroll reports including all data required of any laborer or mechanic. (ordinance 8731, 6/24/85 and 8940 as amended).

(17) **Supporting documentation**.

At his/her discretion, the City of Duluth employee responsible for prevailing wage labor standards may demand proof of payment of the prevailing wage which may include copies of a payroll register, itemized time sheet and matching cancelled check, or any other supporting documents as stipulated. Payment to the prime contractor may be withheld until documentation is received and approved.

(18) **Kickbacks from Public Works employees prohibited**.

No contractor working on a project or other person shall, by force intimidation, or threat of termination of employment, cause any employee working on a project to give up any part of the compensation to which he is entitled under his contract of employment.

Section 9
Minnesota Department of Transportation Specification 1906 Partial Payments
Process For "Withholding Contract Monies" and "Default and Termination of a Contract" 11/5/04

Mn/DOT Specification 1906 Partial Payments describes the Commissioner's authority to withhold funds to protect the Department's interests. In addition, Specification 1808 Default and Termination of a Contract describes the Commissioner's authority to take the prosecution of the work out of the hands of the Contractor.
Additionally, on projects funded in whole or part with federal funds and in accordance with the Required Contract Provisions Federal-Aid Construction Contracts Form – 1273, Section IV, Subpart 6, "Withholding", incorporated into federal aid contracts, the Contracting Officer may, after written notice to the Contractor, take such action as may be necessary to cause the suspension of any further payment, advance or guarantee of funds until such violations have ceased.

However, the Department must give the Contractor, and it's Sureties due notice prior to exercising these authorities. The withholding of contract funds, in accordance with Specification 1906 or the Required Contract Provisions Federal-Aid Construction Contracts Form – 1273, Section IV, Subpart 6, "Withholding", should be implemented as soon as a possible prevailing wage violation is recognized. However, Default and Termination of a Contract, in accordance with Specification 1808, should only be exercised as a "last resort" if the Contractor is not willing to comply.

Definitions

(Mn/DOT Standard Specifications for Construction 2000 Edition, Section 1103)
Commissioner: The Commissioner of the Minnesota Department of Transportation, or the chief executive of the department or agency constituted for administration of Contract work with its jurisdiction.
Contractor: The individual, firm or corporation Contracting for and undertaking prosecution of the prescribed work; the party of the second part to the Contract, acting directly or through a duly authorized representative.
Department: The Department of Transportation or the State of Minnesota, or the political subdivision, governmental body, board, commission, office, department, division, or agency constituted for administration of the Contract work within its jurisdiction.

(Form 1273 - 29 CFR, Part 5.1, Definitions)

Contracting Officer: The individual, a duly appointed successor or authorized representative who is designated and authorized to enter into Contracts on behalf of the Federal Agency and/or the City of Duluth.

Important Considerations

1. Upon completion of the work under a contract, the department should consider issuing the final voucher as soon as possible. Failure to finalize a contract expeditiously could result in subsequent claims that would prevent the department from finalizing the contract. However, before the issuance of the final voucher, the department must be able to ensure that the terms of the contract have been satisfied. Failure on the part of the department to ensure compliance could result in the Mn/DOT state aid division retaining funds from the department in accordance with *Minnesota Rules 8820.3000, subpart 5*.

2. On every contract, the department should withhold the final retainage in accordance with the following guidelines: (1) if the total amount of the contract is $1,000,000 or more, the department should retain funds not more than $50,000, (2) if the total amount of the contract is less than $1,000,000, the department should retain 5% of the total contract, (3) retainage should be withheld until the department can ensure that the contractor has met the terms of the contract or until the finalization of the contract.

3. This guide specifies that the department verbally notify the bonding company early in the process. Generally, as a "rule of thumb", notifying the bonding company is usually the "last resort". However, the justification for the early notification is related to the language found in *Minnesota statute 574.31, subdivision 2,* which summarizes that if an individual or the department does not submit a claim on the payment bond within 120 days after the completion of work under the contract, the claim can be denied.

The following are general guidelines that should be followed prior to placing a Contractor in default:

Step 1: Upon verbal or written notification that a possible prevailing wage violation exists, the Department should give written notice to the Contractor regarding the nature of the claim, along with the Department's intent to withhold monies until the claim is investigated and determined to be in compliance. Additionally, the Department should inform the Contractor that the bonding company has been verbally notified of the claim. Please be aware, the Department should ensure employee confidentiality at all times.

Step 2: Upon a preliminary determination surrounding the financial extent of the claim, the Department should consider retaining a "reasonable" portion of one or more partial estimates in accordance with Mn/DOT's 2000 Standard Specifications for Construction, Section 1906; or on federal aid contracts, in accordance with the Required Contract Provisions Federal-Aid Construction Contracts Form – 1273, Section IV, Subpart 6, "Withholding".

Step 3: If it is determined that the claim is valid, the Department should schedule a meeting with the Contractor and attempt to resolve the matter. If the claim is determined to be invalid, the Department should release any partial estimates that may have been held as a result of the claim. However, the Department should continue to withhold the final retainage in accordance with the above-mentioned: *Important Considerations, 2*.

Step 4: If resolution cannot be obtained through a meeting, the Department should order the Contractor, in writing, to complete their obligations under the contract. The letter should clearly state the circumstances under which the Department has deemed that the Contractor has not met the terms of the contract. Additionally, the Department should include a reasonable deadline for this obligation to be completed. A copy of this letter should be forwarded to the Surety, District State Aid Engineer (DSAE), Labor Compliance Unit and the Department's Attorney.

Step 5: In the event that the Contractor does not respond to the Department's written order, the Department should send a similar letter, requesting that the Contractor respond immediately, in writing, regarding the Contractor's intention to comply or not comply with the order. A copy of this letter should be forwarded to the Surety, District State Aid Engineer (DSAE), Labor Compliance Unit and the Department's Attorney.

Step 6: If the Department still does not get a proper response from the Contractor, the Department should write another letter, addressed to both the Contractor and the Surety, specifying all the facts of the alleged breach, demanding that the Contractor, or its Surety, respond satisfactorily within 10 days or the Department may exercise its authority to Default and Terminate the Contract in accordance within/DOT's 2000 Specifications for Construction, Section

1808. It's important to provide sufficient detail so that the Surety understands the situation. This notification should be sent by certified mail. A copy of this letter should be forwarded to the Surety, District State Aid Engineer (DSAE), Labor Compliance Unit and the Department's Attorney.

Step 7: If the Contractor or Surety is unresponsive after 10 days, the Department should consult with their attorney to consider proceeding with Default and Termination of the Contract.

Step 8: Upon termination of the contract, the Department provides a written order to the Surety, requiring the Surety to bring resolution to the prevailing wage violation.

Step 9: The Department places the Contractor on a Non-Responsible Bidder's List and rejects any future awards.

Section 10

Federal Labor Standards Provisions U.S. Department of Housing and Urban Development Office of Labor Relations

Previous editions are obsolete Page 1 of 5 form **HUD-4010 (06/2009**) ref. Handbook 1344.1

Applicability

The Project or Program to which the construction work covered by this contract pertains is being assisted by the United States of America and the following Federal Labor Standards Provisions are included in this Contract pursuant to the provisions applicable to such Federal assistance.

A. 1. (i) Minimum Wages. All laborers and mechanics employed or working upon the site of the work, will be paid unconditionally and not less often than once a week, and without subsequent deduction or rebate on any account (except such payroll deductions as are permitted by regulations issued by the Secretary of Labor under the Copeland Act (29 CFR Part 3), the full amount of wages and bona fide fringe benefits (or cash equivalents thereof) due at time of payment computed at rates not less than those contained in the wage determination of the Secretary of Labor which is attached hereto and made a part hereof, regardless of any contractual relationship which may be alleged to exist between the contractor and such laborers and mechanics.

Contributions made or costs reasonably anticipated for bona fide fringe benefits under Section l(b)(2) of the Davis-Bacon Act on behalf of laborers or mechanics are considered wages paid to such laborers or mechanics, subject to the provisions of 29 CFR 5.5(a)(1)(iv); also, regular contributions made or costs incurred for more than a weekly period (but not less often than quarterly) under plans, funds, or programs, which cover the particular weekly period, are deemed to be constructively made or incurred during such weekly period.

Such laborers and mechanics shall be paid the appropriate wage rate and fringe benefits on the wage determination for the classification of work actually performed, without regard to skill, except as provided in 29 CFR 5.5(a)(4). Laborers or mechanics performing work in more than one classification may be compensated at the rate specified for each classification for the time actually worked therein: Provided, That the employer's payroll records accurately set forth the time spent in each classification in which work is performed. The wage determination (including any additional classification and wage rates conformed under 29 CFR 5.5(a)(1)(ii) and the Davis-Bacon poster (WH-1321) shall be posted at all times by the contractor and its subcontractors at the site of the work in a prominent and accessible, place where it can be easily seen by the workers.

(ii) (a) Any class of laborers or mechanics which is not listed in the wage determination and which is to be employed under the contract shall be classified in conformance with the wage determination. HUD shall approve an additional classification and wage rate and fringe benefits therefore only when the following criteria have been met:

(1) The work to be performed by the classification requested is not performed by a classification in the wage determination; and

(2) The classification is utilized in the area by the construction industry; and

(3) The proposed wage rate, including any bona fide fringe benefits, bears a reasonable relationship to the wage rates contained in the wage determination.

(b) If the contractor and the laborers and mechanics to be employed in the classification (if known), or their representatives, and HUD or its designee agree on the classification and wage rate (including the amount designated for fringe benefits where appropriate), a report of the action taken shall be sent by HUD or its designee to the Administrator of the Wage and Hour Division, Employment Standards Administration, U.S. Department of Labor, Washington, D.C. 20210. The Administrator, or an authorized representative, will approve, modify, or disapprove every additional classification action within 30 days of receipt and so advise HUD or its designee or will notify HUD or its designee within the 30-day period that additional time is necessary. (Approved by the Office of Management and Budget under OMB control number 1215-0140.)

(c) In the event the contractor, the laborers or mechanics to be employed in the classification or their representatives, and HUD or its designee do not agree on the proposed classification and wage rate (including the amount designated for fringe benefits, where appropriate), HUD or its designee shall refer the questions, including the views of all interested parties and the recommendation of HUD or its designee, to the Administrator for determination. The Administrator, or an authorized representative, will issue a determination within 30 days of receipt and so advise HUD or its designee or will notify HUD or its designee within the 30-day period that additional time is necessary. (Approved by the Office of Management and Budget under OMB Control Number 1215-0140.)

(d) The wage rate (including fringe benefits where appropriate) determined pursuant to subparagraphs (1)(ii)(b) or (c) of this paragraph, shall be paid to all workers performing work in the classification under this contract from the first day on which work is performed in the classification.

(iii) Whenever the minimum wage rate prescribed in the contract for a class of laborers or mechanics includes a fringe benefit which is not expressed as an hourly rate, the contractor shall either pay the benefit as stated in the wage determination or shall pay another bona fide fringe benefit or an hourly cash equivalent thereof.

(iv) If the contractor does not make payments to a trustee or other third person, the contractor may consider as part Previous editions are obsolete Page 2 of 5 form **HUD-4010** (06/2009) ref. Handbook 1344.1 of the wages of any laborer or mechanic the amount of any costs reasonably anticipated in providing bona fide fringe benefits under a plan or program, Provided, That the Secretary of Labor has found, upon the written request of the contractor, that the applicable standards of the Davis-Bacon Act have been met. The Secretary of Labor may require the contractor to set aside in a separate account assets for the meeting of obligations under the plan or program. (Approved by the Office of Management and Budget under OMB Control Number 1215-0140.)

2. Withholding. HUD or its designee shall upon its own action or upon written request of an authorized representative of the Department of Labor withhold or cause to be withheld from the contractor under this contract or any other Federal contract with the same prime contractor, or any other Federally-assisted contract subject to Davis-Bacon prevailing wage requirements, which is held by the same prime contractor so much of the accrued payments or advances as may be considered necessary to pay laborers and mechanics, including apprentices, trainees and helpers, employed by the contractor or any subcontractor the full amount of wages required by the contract In the event of failure to pay any laborer or mechanic, including any apprentice, trainee or helper, employed or working on the site of the work, all or part of the wages required by the contract, HUD or its designee may, after written notice to the contractor, sponsor, applicant, or owner, take such action as may be necessary to cause the suspension of any further payment, advance, or guarantee of funds until such violations have ceased. HUD or its designee may, after written notice to the contractor, disburse such amounts withheld for and on account of the contractor or subcontractor to the respective employees to whom they are due. The Comptroller General shall make such disbursements in the case of direct Davis-Bacon Act contracts.

3. (i) Payrolls and basic records. Payrolls and basic records relating thereto shall be maintained by the contractor during the course of the work preserved for a period of three years thereafter for all laborers and mechanics working at the site of the work. Such records shall contain the name, address, and social security number of each such worker, his or her correct classification, hourly rates of wages paid (including rates of contributions or costs anticipated for bona fide fringe benefits or cash equivalents thereof of the types described in Section l(b)(2)(B) of the Davis-bacon Act), daily and weekly number of hours worked, deductions made and actual wages paid. Whenever the Secretary of Labor has found under 29 CFR 5.5 (a)(1)(iv) that the wages of any laborer or mechanic include the amount of any costs reasonably anticipated in providing benefits under a plan or program described in Section l(b)(2)(B) of the Davis-Bacon Act, the contractor shall maintain records which show that the commitment to provide such benefits is enforceable, that the plan or program is financially responsible, and that the plan or program has been communicated in writing to the laborers or mechanics affected, and records which show the costs anticipated or the actual cost incurred in providing such benefits. Contractors employing apprentices or trainees under approved programs shall maintain written evidence of the registration of apprenticeship programs and certification of trainee programs, the registration of the apprentices and trainees, and the ratios and wage rates prescribed in the applicable programs. (Approved by the Office of Management and Budget under OMB Control Numbers 1215-0140 and 1215-0017.)

(ii) (a) The contractor shall submit weekly for each week in which any contract work is performed a copy of all payrolls to HUD or its designee if the agency is a party to the contract, but if the agency is not such a party, the contractor will submit the payrolls to the applicant sponsor, or owner, as the case may be, for transmission to HUD or its designee. The payrolls submitted shall set out accurately and completely all of the information required to be maintained under 29 CFR 5.5(a)(3)(i) except that full social security numbers and home addresses shall not be included on weekly transmittals. Instead the payrolls shall only need to include an individually identifying number for each employee (e.g., the last four digits of the employee's social security number). The required weekly payroll information may be submitted in any form desired. Optional Form WH-347 is available for this purpose from the Wage and Hour Division Web site at *http://www.dol.gov./whd/wh347.pdf* or its successor site. The prime contractor is responsible for the submission of copies of payrolls by all subcontractors. Contractors and subcontractors shall maintain the full social security number and current address of each covered worker, and shall provide them upon request to HUD or its designee if the agency is a party to the contract, but if the agency is not such a party, the contractor will submit the payrolls to the applicant sponsor, or owner, as the case may be, for transmission to HUD or its designee, the contractor, or the Wage and Hour Division of the Department of Labor for purposes of an investigation or audit of compliance with prevailing wage requirements. It is not a violation of this subparagraph for a prime contractor to require a subcontractor to provide addresses and social security numbers to the prime contractor for its own records, without weekly submission to HUD or its designee. (Approved by the Office of Management and Budget under OMB Control Number 1215-0149.)

(b) Each payroll submitted shall be accompanied by a "Statement of Compliance," signed by the contractor or subcontractor or his or her agent who pays or supervises the payment of the persons employed under the contract and shall certify the following:

(1) That the payroll for the payroll period contains the information required to be provided under 29 CFR 5.5 (a)(3)(ii), the appropriate information is being maintained under 29 CFR 5.5(a)(3)(i), and that such information is correct and complete;

Previous editions are obsolete; Page 3 of 5 form **HUD-4010** (06/2009) ref. Handbook 1344.1

(2) That each laborer or mechanic (including each helper, apprentice, and trainee) employed on the contract during the payroll period has been paid the full weekly wages earned, without rebate, either directly or indirectly, and that no deductions have been made either directly or indirectly from the full wages earned, other than permissible deductions as set forth in 29 CFR Part 3;

(3) That each laborer or mechanic has been paid not less than the applicable wage rates and fringe benefits or cash equivalents for the classification of work performed, as specified in the applicable wage determination incorporated into the contract.

(c) The weekly submission of a properly executed certification set forth on the reverse side of Optional Form WH-347 shall satisfy the requirement for submission of the "Statement of Compliance" required by subparagraph A.3.(ii)(b).

(d) The falsification of any of the above certifications may subject the contractor or subcontractor to civil or criminal prosecution under Section 1001 of Title 18 and Section 231 of Title 31 of the United States Code.

(iii) The contractor or subcontractor shall make the records required under subparagraph A.3.(i) available for inspection, copying, or transcription by authorized representatives of HUD or its designee or the Department of Labor, and shall permit such representatives to interview employees during working hours on the job. If the contractor or subcontractor fails to submit the required records or to make them available, HUD or its designee may, after written notice to the contractor, sponsor, applicant or owner, take such action as may be necessary to cause the suspension of any further payment, advance, or guarantee of funds. Furthermore, failure to submit the required records upon request or to make such records available may be grounds for debarment action pursuant to 29 CFR 5.12.

4. Apprentices and Trainees.

(i) Apprentices. Apprentices will be permitted to work at less than the predetermined rate for the work they performed when they are employed pursuant to and individually registered in a bona fide apprenticeship program registered with the U.S. Department of Labor, Employment and Training Administration, Office of Apprenticeship Training, Employer and Labor Services, or with a State Apprenticeship Agency recognized by the Office, or if a person is employed in his or her first 90 days of probationary employment as an apprentice in such an apprenticeship program, who is not individually registered in the program, but who has been certified by the Office of Apprenticeship Training, Employer and Labor Services or a State Apprenticeship Agency (where appropriate) to be eligible for probationary employment as an apprentice. The allowable ratio of apprentices to journeymen on the job site in any craft classification shall not be greater than the ratio permitted to the contractor as to the entire work force under the registered program. Any worker listed on a payroll at an apprentice wage rate, who is not registered or otherwise employed as stated above, shall be paid not less than the applicable wage rate on the wage determination for the classification of work actually performed. In addition, any apprentice performing work on the job site in excess of the ratio permitted under the registered program shall be paid not less than the applicable wage rate on the wage determination for the work actually performed. Where a contractor is performing construction on a project in a locality other than that in which its program is registered, the ratios and wage rates (expressed in percentages of the journeyman's hourly rate) specified in the contractor's or subcontractor's registered program shall be observed. Every apprentice must be paid at not less than the rate specified in the registered program for the apprentice's level of progress, expressed as a percentage of the journeymen hourly rate specified in the applicable wage determination. Apprentices shall be paid fringe benefits in accordance with the provisions of the apprenticeship program. If the apprenticeship program does not specify fringe benefits, apprentices must be paid the full amount of fringe benefits listed on the wage determination for the applicable classification. If the Administrator determines that a different practice prevails for the applicable apprentice classification, fringes shall be paid in accordance with that determination. In the event the Office of Apprenticeship Training, Employer and Labor Services, or a State Apprenticeship Agency recognized by the Office, withdraws approval of an apprenticeship program, the contractor will no longer be permitted to utilize apprentices at less than the applicable predetermined rate for the work performed until an acceptable program is approved.

(ii) Trainees. Except as provided in 29 CFR 5.16, trainees will not be permitted to work at less than the predetermined rate for the work performed unless they are employed pursuant ',to and individually registered in a program which has received prior approval, evidenced by formal certification by the U.S. Department of Labor, Employment and Training Administration. The ratio of trainees to journeymen on the job site shall not be greater than permitted under the plan approved by the Employment and Training Administration. Every trainee must be paid at not less than the rate specified in the approved program for the trainee's level of progress, expressed as a percentage of the journeyman hourly rate specified in the applicable wage determination. Trainees shall be paid fringe benefits in accordance with the provisions of the trainee program. If the trainee program does not mention fringe benefits, trainees shall be paid the full amount of fringe benefits listed on the wage determination unless the Administrator of the Wage and Hour Division determines that there is an apprenticeship program associated with the corresponding

journeyman wage rate on the wage determination which provides for less than full fringe benefits for apprentices. Any employee listed on the payroll at a trainee rate who is not registered and participating in a training plan approved by
Previous editions are obsolete; Page 4 of 5 form **HUD-4010** (06/2009) ref. Handbook 1344.1
the Employment and Training Administration shall be paid not less than the applicable wage rate on the wage determination for the work actually performed. In addition, any trainee performing work on the job site in excess of the ratio permitted under the registered program shall be paid not less than the applicable wage rate on the wage determination for the work actually performed. In the event the Employment and Training Administration withdraws approval of a training program, the contractor will no longer be permitted to utilize trainees at less than the applicable predetermined rate for the work performed until an acceptable program is approved.

(iii) Equal employment opportunity. The utilization of apprentices, trainees and journeymen under 29 CFR Part 5 shall be in conformity with the equal employment opportunity requirements of Executive Order 11246, as amended, and 29 CFR Part 30.

5. Compliance with Copeland Act requirements. The contractor shall comply with the requirements of 29 CFR Part 3 which are incorporated by reference in this contract

6. Subcontracts. The contractor or subcontractor will insert in any subcontracts the clauses contained in subparagraphs 1 through 11 in this paragraph A and such other clauses as HUD or its designee may by appropriate instructions require, and a copy of the applicable prevailing wage decision, and also a clause requiring the subcontractors to include these clauses in any lower tier subcontracts. The prime contractor shall be responsible for the compliance by any subcontractor or lower tier subcontractor with all the contract clauses in this paragraph.

7. Contract termination; debarment. A breach of the contract clauses in 29 CFR 5.5 may be grounds for termination of the contract and for debarment as a contractor and a subcontractor as provided in 29 CFR 5.12.

8. Compliance with Davis-Bacon and Related Act Requirements. All rulings and interpretations of the Davis-Bacon and Related Acts contained in 29 CFR Parts 1, 3, and 5 are herein incorporated by reference in this contract

9. Disputes concerning labor standards. Disputes arising out of the labor standards provisions of this contract shall not be subject to the general disputes clause of this contract. Such disputes shall be resolved in accordance with the procedures of the Department of Labor set forth in 29 CFR Parts 5, 6, and 7. Disputes within the meaning of this clause include disputes between the contractor (or any of its subcontractors) and HUD or its designee, the U.S. Department of Labor, or the employees or their representatives.

10. (i) Certification of Eligibility. By entering into this contract the contractor certifies that neither it (nor he or she) nor any person or firm who has an interest in the contractor's firm is a person or firm ineligible to be awarded Government contracts by virtue of Section 3(a) of the Davis-Bacon Act or 29 CFR 5.12(a)(1) or to be awarded HUD contracts or participate in HUD programs pursuant to 24 CFR Part 24.
(ii) No part of this contract shall be subcontracted to any person or firm ineligible for award of a Government contract by virtue of Section 3(a) of the Davis-Bacon Act or 29 CFR 5.12(a)(1) or to be awarded HUD contracts or participate in HUD programs pursuant to 24 CFR Part 24.
(iii) The penalty for making false statements is prescribed in the U.S. Criminal Code, 18 U.S.C. 1001. Additionally, U.S. Criminal Code, Section 1 01 0, Title 18, U.S.C., "Federal Housing Administration transactions", provides in part: "Whoever, for the purpose of . . . influencing in any way the action of such Administration..... makes, utters or publishes any statement knowing the same to be false..... shall be fined not more than $5,000 or imprisoned not more than two years, or both."

11. Complaints, Proceedings, or Testimony by Employees. No laborer or mechanic to whom the wage, salary, or other labor standards provisions of this Contract are applicable shall be discharged or in any other manner discriminated against by the Contractor or any subcontractor because such employee has filed any complaint or instituted or caused to be instituted any proceeding or has testified or is about to testify in any proceeding under or relating to the labor standards applicable under this Contract to his employer.

B. <u>Contract Work Hours and Safety Standards Act.</u> The provisions of this paragraph B are applicable where the amount of the prime contract exceeds $100,000. As used in this paragraph, the terms "laborers" and "mechanics" include watchmen and guards.

(1) Overtime requirements. No contractor or subcontractor contracting for any part of the contract work which may require or involve the employment of laborers or mechanics shall require or permit any such laborer or mechanic in any workweek in which the individual is employed on such work to work in excess of 40 hours in such workweek unless such laborer or mechanic receives compensation at a rate not less than one and one-half times the basic rate of pay for all hours worked in excess of 40 hours in such workweek.

(2) Violation; liability for unpaid wages; liquidated damages. In the event of any violation of the clause set forth in subparagraph (1) of this paragraph, the contractor and any subcontractor responsible therefore shall be liable for the unpaid wages. In addition, such contractor and subcontractor shall be liable to the United States (in the case of work done under contract for the District of Columbia or a territory, to such District or to such territory), for liquidated damages. Such liquidated damages shall be computed with respect to each individual laborer or mechanic, including watchmen and guards, employed in violation of the clause set forth in subparagraph (1) of this paragraph, in the sum of $10 for each calendar day on which such individual was required or permitted to work in excess of the standard workweek of 40 hours without payment of the overtime wages required by the clause set forth in sub paragraph (1) of this paragraph.
Previous editions are obsolete Page 5 of 5 form **HUD-4010** (06/2009) ref. Handbook 1344.1

(3) Withholding for unpaid wages and liquidated damages. HUD or its designee shall upon its own action or upon written request of an authorized representative of the Department of Labor withhold or cause to be withheld, from any moneys payable on account of work performed by the contractor or subcontractor under any such contract or any other Federal contract with the same prime contract, or any other Federally-assisted contract subject to the Contract Work Hours and Safety Standards Act which is held by the same prime contractor such sums as may be determined to be necessary to satisfy any liabilities of such contractor or subcontractor for unpaid wages and liquidated damages as provided in the clause set forth in subparagraph (2) of this paragraph.

(4) Subcontracts. The contractor or subcontractor shall insert in any subcontracts the clauses set forth in subparagraph (1) through (4) of this paragraph and also a clause requiring the subcontractors to include these clauses in any lower tier subcontracts. The prime contractor shall be responsible for compliance by any subcontractor or lower tier subcontractor with the clauses set forth in subparagraphs (1) through (4) of this paragraph.

C. <u>Health and Safety.</u> The provisions of this paragraph C are applicable where the amount of the prime contract exceeds $100,000.

(1) No laborer or mechanic shall be required to work in surroundings or under working conditions which are unsanitary, hazardous, or dangerous to his health and safety as determined under construction safety and health standards promulgated by the Secretary of Labor by regulation.

(2) The Contractor shall comply with all regulations issued by the Secretary of Labor pursuant to Title 29 Part 1926 and failure to comply may result in imposition of sanctions pursuant to the Contract Work Hours and Safety Standards Act, (Public Law 91-54, 83 Stat 96). 40 USC 3701 et seq.

(3) The contractor shall include the provisions of this paragraph in every subcontract so that such provisions will be binding on each subcontractor. The contractor shall take such action with respect to any subcontractor as the Secretary of Housing and Urban Development or the Secretary of Labor shall direct as a means of enforcing such provisions.

Section 11

Equal Opportunity Laws and Regulations

(A) In addition to Contract specifications set forth below, the Contractor shall conduct and administer this Contract in compliance with:

(1) Title VI of the Civil Rights Act of 1964 (Pub. L. 88-352) and implementing regulations issued at 24 CFR Part 1;
(2) Title VIII of the Civil Rights Act of 1968 (Pub. L. 90-284), as amended, and implementing regulations;
(3) Section 109 of the Housing and Community Development Act of 1974, as amended; and the regulations issued pursuant thereto (24 CFR Section 570.601);
(4) Section 3 of the Housing and Urban Development Act of 1968, as amended, and implementing regulations of 24 CFR Part 135;
(5) Executive Order 11246, as amended by Executive Order 11375 and 12086 and implementing regulations at 41 CFR Chapter 60;
(6) Executive Order 11063, as amended by Executive Order 12259 and implementing regulations at 24 CFR Part 107;
(7) Section 504 of the Rehabilitation Act of 1973 (Pub. L. 93-112), as amended, and implementing regulations when published for effect;
(8) The Age Discrimination Act of 1975, as amended, (Pub. L. 94-135) and implementing regulations when published for effect;
(9) The Minnesota Human Rights Act of 1974, as amended (Chapter 363).

Equal Opportunity and Affirmative Action

(A) Contractors and Subcontractors that have a work force in excess of fifty (50) employees and a contract in excess of $50,000.00 shall prepare and maintain an appropriate affirmative action plan in accordance with the provisions of 41 CFR 60 "Compliance Responsibility for Equal Opportunity".

(B) Non-segregated Facilities. The Contractor shall certify that he does not maintain or provide for his employees any segregated facilities at any of his establishments, and that he does not permit his employees to perform their services at any location, under his control, where segregated facilities are maintained. The Contractor covenants that he will not maintain or provide for his employees any segregated facilities at any of his establishments, and he will not permit his employees to perform their services at any location, under his control, where segregated facilities are maintained. As used in this paragraph the term "segregated facilities" means any waiting rooms, work areas, rest rooms and wash rooms, restaurants and other eating areas, time clocks, locker rooms and other storage or dressing areas, parking lots, drinking fountains, recreation or facilities provided for employees which are segregated by explicit directive or are in fact segregated on the basis of race, color, creed, religion, national origin, ancestry, age, marital status, status with respect to public assistance, and/or disability because of habit, local custom, or otherwise.

General Provisions Against Discrimination

(A) In all hiring or employment made possible by or resulting from this Contract, there:

(1) will not be any discrimination against any employee or applicant for employment because of race, color, creed, religion, national origin, ancestry, age, sex, marital status, status with respect to public assistance, and/or disability.

(2) affirmative action will be taken to ensure that applicants are employed, and that employees are treated during employment without regard to their race, color, creed, religion, national origin, ancestry, age, sex, marital status, status with respect to public assistance, and/or disability. This requirement shall apply to, but not be limited to, the following: employment, upgrading, demotion or transfer; recruitment or recruitment advertising; lay-off or termination; rates of pay or other forms of compensation; and selection for training, including apprenticeship. There shall be posted in conspicuous places available to employees and applicants for employment, notices setting forth the provisions of this clause. All solicitations or advertisements for employees shall state that all qualified applicants will receive consideration for employment without regard to race, color, creed, religion, national origin, ancestry, age, sex, marital status, status with respect to public assistance, and/or disability.

(B) No person in the United States shall, on the grounds of race, color, creed, religion, national origin, age, sex, marital status, status with respect to public assistance, and/or disability, be excluded from participation in, be denied the benefits of, or be subject to discrimination under any program or activity made possible by or resulting from this Contract. The Contractor and each employer will comply with all requirements imposed by or pursuant to the regulations of the Federal Agency effectuating Title VI of the Civil Rights Act of 1966. The Contractor will note this requirement in all solicitations or advertisements for employees. The Contractor agrees to post in conspicuous places, available to employees and applicants for employment, notices to be provided setting forth the provisions of this nondiscrimination clause.

(C) The Contractor will send to each labor union or representative of workers with which he has a collective bargaining agreement or other contract or understanding, a notice advising the labor union or workers' representative of the Contractor's commitments under these provisions, and shall post copies of the notice in conspicuous places available to employees and applicants for employment.

(D) The Contractor hereby agrees that he will incorporate into any contract for construction work, or modification thereof, as defined in the regulations of the Secretary of Labor at 41 CFR Chapter 60, which is paid for in whole or in part with funds obtained pursuant to this Contract, the equal opportunity clause which is a part of these Contract Documents.

(E) The Contractor further agrees that he will be bound by the equal opportunity clause and other provisions of 41 CFR Chapter 60, with respect to his own employment practices when he participates in federally assisted construction work: **Provided:** That of the Contractor so participating is a State or Local Government, the above equal opportunity clause is not applicable to any agency, instrumentality, or subdivision of such government which does not participate in work on or under the Contract. Also, the Contractor will make his files available to inspection by appropriate government agencies and shall furnish those reports as may be required by said agencies.

(F) The Contractor agrees that he will assist and cooperate actively with the Federal Agency and the Secretary of Labor in obtaining the compliance of subcontractors with the equal opportunity clause and the rules, regulations, and relevant orders of the Secretary of Labor, that he will furnish the Federal Agency and the Secretary of Labor such information as they may require for the supervision of such compliance, and that he will otherwise assist the Federal Agency in the discharge of its primary responsibility for securing compliance.

(G) The Contractor further agrees that he will refrain from entering into any contract or any contract modification subject to Executive Order 11246 of September 24, 1965, with a subcontractor debarred from, or who has not demonstrated eligibility for, Government contracts and federally assisted construction contracts pursuant to the Executive Order. In addition, the Contractor agrees that if he fails or refuses to comply with these undertakings, the City or the Federal Agency may take any or all of the following actions: Terminate or suspend in whole or in part this Contract; refrain from extending any further assistance to the Contractor under the Project with respect to which the failure or refusal occurred until satisfactory assurance of future compliance has been received from such Contractor and refer the case to the Department of Justice for appropriate legal proceedings.

Affirmative Action - "Construction Contracts" over $10,000

Notice of Requirement for Affirmative Action to Ensure Equal Employment Opportunity
(Executive Order 11246)

1. The Offeror's or Bidder's attention is called to the "Equal Opportunity Clause" and the "Standard Federal Equal Employment Opportunity Construction Contract Specifications" set forth herein.

2. The goals and timetables for minority and female participation, expressed in percentage terms for the Contractor's aggregate workforce in each trade on all construction work in the covered area, are as follows:

Timetables	Goals for minority participation (percent)	Goals for female participation (percent)
From April 1, 1980 until revised	3.0	6.9

These goals are applicable to all the Contractor's construction work (whether or not it is Federal or federally assisted) performed in the covered area.

The Contractor's compliance with the Executive Order and the regulations in 41 CFR Part 60-4 shall be based on its implementation of the Equal Opportunity Clause, specific affirmative action obligations required by the specifications set forth in 41 CFR 60-4.3 (a), and its efforts to meet the goals established for the geographical area where the contract resulting from this solicitation is to be performed. The hours of minority and female employment and training must be substantially uniform throughout the length of the contract, and in each trade, and the contractor shall make a good faith effort to employ minorities and women evenly on each of its projects. The transfer of minority or female employees or trainees from Contractor to Contractor or from project to project for the sole purpose of meeting the Contractor's goals shall be a violation of the contract, the Executive Order and the regulations in 41 CFR Part 60-4. Compliance with the goals will be measured against the total work hours performed.

3. The Contractor shall provide written notification to the City and to the Director of the Office of Federal Contract Compliance Programs; U.S. Department of Labor, ESA/OFCCP, 16th Floor, 230 South Dearborn Street, Chicago, Illinois, 60604, within 10 working days of award of any construction subcontract and/or subcontract in excess of $10,000 at any tier for construction work under the contract resulting from this solicitation. The notification shall list the name, address and telephone number of the contractor and/or subcontractor; employer identification number; estimated dollar amount of the prime contract; estimated dollar amount of the subcontract; estimated starting and completion dates of the subcontract; and the geographical area in which the contract is to be performed.

4. As used in this Notice, and in the Contract, the "covered area" is all work under a contract currently held with the City of Duluth, Minnesota.

Standard Federal Equal Employment Opportunity
Construction Contract Specifications (Executive Order 11246)

1. As used in these specifications:
   a) "Director" means Director, Office of Federal Contract Compliance Programs, United States Department of Labor; or any person to whom the Director delegates authority;
   b) "Employer identification number" means the Federal Social Security number used on the Employer's Quarterly Federal Tax Return, U.S. Treasury Department Form 941.
   c) "Minority" includes:
      (i) Black (all persons having origins in any of the Black African racial groups not of Hispanic origin);
      (ii) Hispanic (all persons of Mexican, Puerto Rican, Cuban, Central or South American or other Spanish Culture or origin, regardless of race);
      (iii) Asian and Pacific Islander (all persons having origins in any of the original peoples of the Far East, Southeast Asia, the Indian Subcontinent, or the Pacific Islands); and
      (iv) American Indian or Alaskan Native (all persons having origins in any of the original peoples of North America and maintaining identifiable tribal affiliations through membership and participation or community identification).

2. Whenever the Contractor, or any Subcontractor at any tier, subcontracts a portion of the work involving any construction trade, it shall physically include in each subcontract in excess of $10,000 the provisions of these specifications and the Notice which contains the applicable goals for minority and female participation and which is set forth in the solicitations from which this contract resulted.

3. If the Contractor is participating (pursuant to 41 CFR 60-4.5) in a Hometown Plan approved by the U.S. Department of Labor in the covered area either individually or through an association, its affirmative action obligations on all work in the Plan area (including goals and timetables) shall be in accordance with that Plan for those trades which have unions participating in the Plan. Contractors must be able to demonstrate their participation in and compliance with the provisions of any such Hometown Plan. Each Contractor or Subcontractor participating in an approved Plan is individually required to comply with its obligations under the EEO clause, and to make a good faith effort to achieve each goal under the Plan in each trade in which it has employees. The overall good faith performance by other Contractors or Subcontractors toward a goal in approved Plan does not excuse any covered Contractor's or Subcontractor's failure to take good faith efforts to achieve the Plan goals and timetables.

4. The Contractor shall implement the specific affirmative action standards provided in paragraphs 7a through p of these specifications. The goals set forth in the solicitation from which this contract resulted are expressed as percentages of the total hours of employment and training of minority and female utilization the Contractor should reasonably be able to achieve in each construction trade in which it has employees in the covered area. The Contractor is expected to make substantially uniform progress toward its goals in each craft during the period specified.

5. Neither the provisions of any collective bargaining agreement, nor the failure by a union with whom the Contractor has a collective bargaining agreement, to refer either minorities or women shall excuse the Contractor's obligations under these specifications, Executive Order 11246, or the regulations promulgated pursuant thereto.

6. In order for the non-working training hours of apprentices and trainees to be counted in meeting the goals, such apprentices and trainees must be employed by the Contractor during the training period, and the Contractor must have made a commitment to employ the apprentices and trainees at the completion of their training, subject to the availability of employment opportunities. Trainees must be trained pursuant to training programs approved by the U.S. Department of Labor.

7. The Contractor shall take specific affirmative action to ensure equal employment opportunity. The evaluation of the Contractor's compliance with these specifications shall be based upon its effort to achieve maximum results from its actions. The Contractor shall document these efforts fully, and shall implement affirmative action steps at least as extensive as the following:

a. Ensure and maintain a working environment free of harassment, intimidation, and coercion at all sites, and in all facilities at which the Contractor's employees are assigned to work. The Contractor, where possible, will assign two or more women to each construction project. The Contractor shall specifically ensure that all foremen, superintendents, and other on-site supervisory personnel are aware of and carry out the Contractor's obligation to maintain such a working environment, with specific attention to minority or female individuals working at such sites or in such facilities.

b. Establish and maintain a current list of minority and female recruitment sources, provide written notification to minority and female recruitment sources and to community organizations when the Contractor or its unions have employment opportunities available, and maintain a record of the organizations' responses.

c. Maintain a current file of the names, addresses and telephone numbers of each minority and female off-the-street applicant and minority or female referral from a union, a recruitment source or community organization and of what action was taken with respect to each such individual. If such individual was sent to the union hiring hall for referral and was not referred back to the Contractor by the union or, if referred, not employed by the Contractor, this shall be documented in the file with the reason therefore, along with whatever additional actions the Contractor may have taken.

d. Provide immediate written notification to the Director when the union or unions with which the Contractor has a collective bargaining agreement has not referred to the Contractor a minority person or woman sent by the Contractor, or when the Contractor has other information that the union referral process has impeded the Contractor's efforts to meet its obligations.

e. Develop on-the-job training opportunities and/or participate in training programs for the area which expressly include minorities and women, including upgrading programs and apprenticeship and trainee programs relevant to the Contractor's employment needs, especially those programs funded or approved by the Department of Labor. The Contractor shall provide notices of these programs to the sources compiled under 7b above.

f. Disseminate the Contractor's EEO policy by providing notice of the policy to unions and training programs and requesting their cooperation in assisting the Contractor in meeting its EEO obligations; by including it in any policy manual and collective bargaining agreement; by publicizing it in the company newspaper, annual report, etc.; by specific review of the policy with all management personnel and with all minority and female employees at least once a year; and by posting the company EEO policy on bulletin boards accessible to all employees at each location where construction work is performed.

g. Review, at least annually, the company's EEO policy and affirmative action obligations under these specifications with all employees having any responsibility for hiring, assignment, layoff, termination or other employment decisions including specific review of these items with onsite supervisory personnel such as Superintendents, General Foremen, etc., prior to the initiation of construction work at any job site. A written record shall be made and maintained identifying the time and place of these meetings, persons attending, subject matter discussed, and disposition of the subject matter.

h. Disseminate the Contractor's EEO policy externally by including it any advertising in the news media, specifically including minority and female news media, and providing written notification to and discussing the Contractor's EEO policy with other Contractors and Subcontractors with whom the Contractor does or anticipates doing business.

i. Direct its recruitment efforts, both oral and written, to minority, female and community organizations, to schools with minority and female students and to minority and female recruitments and training organizations serving the Contractor's recruitment area and employment needs. Not later than one month prior to the date for the acceptance of applications for apprenticeship or other training by any recruitment source, the Contractor shall send written notification to organizations such as the above, describing the openings, screening procedures, and tests to be used in the selection process.

j. Encourage present minority and female employees to recruit other minority persons and women and, where reasonable, provide after school, summer and vacation employment to minority and female youth both on the site and in other areas of a Contractor's work force.

k. Validate all tests and other selection requirements where there is an obligation to do so under 41 CFR Part 60-3.

l. Conduct, at least annually, an inventory and evaluation at least of all minority and female personnel for promotional opportunities and encourage these employees to seek or to prepare for, through appropriate training, etc., such opportunities.

m. Ensure that seniority practices, job classifications, work assignments and other personnel practices, do not have a discriminatory effect by continually monitoring all personnel and employment related activities to ensure that the EEO policy and the Contractor's obligations under these specifications are being carried out.

n. Ensure that all facilities and company activities are nonsegregated except that separate or single-user toilet and necessary changing facilities shall be provided to assure privacy between the sexes.

o. Document and maintain a record of all solicitations of officers for subcontracts from minority and female construction contractors and suppliers, including circulation of solicitations to minority and female contractor associations and other business associations.

p. Conduct a review, at least annually, of all supervisor's adherence to and performance under the Contractor's EEO policies and affirmative action obligations.

8. Contractors are encouraged to participate in voluntary associations which assist in fulfilling one or more of their affirmative action obligations (7a through p). The efforts of a contractor association, joint contractor-union, contractor-community, or other similar group of which the contractor is a member and participant, may be asserted as fulfilling any one or more of its obligations under 7a through p of these Specifications provided that the contractor actively participates in the group, makes every effort to assure that the group has a positive impact on the employment of minorities and women in the industry, ensures that the concrete benefits of the program are reflected in the Contractor's minority and female workforce participation, makes a good faith effort to meet its individual goals and timetables, and can provide access to documentation which demonstrates the effectiveness of actions taken on behalf of the Contractor. The obligation to comply, however, is the Contractor's and failure of such a group to fulfill an obligation shall not be a defense for the Contractor's noncompliance.

9. A single goal for minorities and a separate single goal for women have been established. The Contractor, however, is required to provide equal employment opportunity and to take affirmative action for all minority groups, both male and female, and all women, both minority and non-minority. Consequently, the Contractor may be in violation of the Executive Order if a particular group is employed in a substantially disparate manner (for example, even though the Contractor has achieved its goals for women generally, the Contractor may be violation of the Executive Order if a specific minority group of women is underutilized).

10. The Contractor shall not use the goals and timetables or affirmative action standards to discriminate against any person because of race, color, creed, religion, national origin, sex, ancestry, age, marital status, status with respect to public assistance and/or disability.

11. The Contractor shall not enter into any Subcontract with any person or firm debarred from Government contracts pursuant to Executive Order 11246.

12. The Contractor shall carry out such sanctions and penalties for violation of these specifications and of the Equal Opportunity Clause, including suspension, termination and cancellation of existing subcontracts as may be imposed or ordered pursuant to Executive Order 11246, as amended, and its implementing regulations, by the Office of Federal Contract Compliance Programs. Any Contractor who fails to carry out such sanctions and penalties shall be in violation of these specifications and Executive Order 11246, as amended.

13. The Contractor, in fulfilling its obligations under these specifications, shall implement specific affirmative action steps, at least as extensive as those standards prescribed in paragraph 7 of these specifications, so as to achieve maximum results from its efforts to ensure equal employment opportunity. If the Contractor fails

to comply with the requirements of the Executive Order, the implementing regulations, or these specifications, the Director shall proceed in accordance with 41 CFR 60-4.8.

14. The Contractor shall designate a responsible official to monitor all employment related activity to ensure that the company EEO policy is being carried out, to submit reports relating to the provisions hereof as may be required by the Government and to keep records. Records shall at least include for each employee the name, address, telephone numbers, construction trade, union affiliation if any, employee identification number when assigned, social security number, race, sex, status (e.g., mechanic, apprentice, trainee, helper, or laborer), dates of changes in status, hours worked per week in the indicated trade, rate of pay, and locations at which the work was performed. Records shall be maintained in an easily understandable and retrievable form; however, to the degree that existing records satisfy this requirement, contractors shall not be required to maintain separate records.

15. Nothing herein provided shall be construed as a limitation upon the application of other laws which establish different standards of compliance or upon the application of requirements for the hiring of local or other area residents (e.g., those under the Public Works Employment Act of 1977 and the Community Development Block Grant Program).

Affirmative Action for Handicapped Workers

(applies to contracts in excess of $2,500)

(A) The Contractor will not discriminate against any employee or applicant for employment because of physical or mental handicap in regard to any position for which the employee or applicant is qualified. The Contractor agrees to take affirmative action to employ, advance in employment and otherwise treat qualified handicapped individuals without discrimination based upon their physical or mental handicap in all employment practices such as the following: Employment, upgrading, demotion or transfer, recruitment, advertising, layoff or termination, rates of pay or other forms of compensation, and selection for training, including apprenticeship.

(B) The Contractor agrees to comply with the rules, regulations, and relevant orders of the Secretary of Labor issued pursuant to the Act.

(C) In the event of the Contractor's noncompliance with the requirements of this clause, actions for noncompliance may be taken in accordance with the rules, regulations and relevant orders of the Secretary of Labor issued pursuant to the Act.

(D) The Contractor agrees to post in conspicuous places, available to employees and applicants for employment, notices in a form to be prescribed by the Director, provided by or through the contracting officer. Such notices shall state the Contractor's obligation under the law to take affirmative action to employ and advance in employment qualified handicapped employees and applicants for employment, and the rights of applicants and employees.

(E) The Contractor will notify each labor union or representative of workers with which it has a collective bargaining agreement or other contract understanding, that the Contractor is bound by the terms of Section 503 of the Rehabilitation Act of 1973, and is committed to take affirmative action to employ and advance in employment physically and mentally handicapped individuals.

(F) The Contractor will include the provisions of this clause in every subcontract or purchase order of $2,500 or more unless exempted by rules, regulations, or orders of the Secretary issued pursuant to Section 503 of the Act, so that such provisions will be binding upon each subcontractor or vendor. The Contractor will take such action with respect to any subcontract or purchase order as the Director of the Office of Federal Contract Compliance Programs may direct to enforce such provisions, including action for noncompliance.

Affirmative Action for Disabled Veterans and Veterans of the Vietnam Era

(applies to contracts in excess of $10,000)

(A) The Contractor will not discriminate against any employee or applicant for employment because he or she is a disabled veteran or veteran of the Vietnam era in regard to any position for which the employee or applicant for employment is qualified. The Contractor agrees to take affirmative action to employ, advance in employment and otherwise treat qualified disabled veterans and veterans of the Vietnam era without discrimination based upon their disability or veterans status in all employment practices such as the following: Employment, upgrading, demotion or transfer, recruitment, advertising, layoff or termination, rates of pay or other forms of compensation, and selection for training, including apprenticeship.

(B) The Contractor agrees that all suitable employment openings of the Contractor which exist at the time of the execution of this contract and those which occur during the performance of this contract, including those not generated by this contract and including those occurring at an establishment of the Contractor other than the one wherein the contract is being performed but excluding those of independently operated corporate affiliates, shall be listed at an appropriate local office of the State employment service system wherein the opening occurs. The Contractor further agrees to provide such reports to such local office regarding employment openings and hires as may be required.
State and local government agencies holding Federal contracts of $10,000 or more shall also list all their suitable openings with the appropriate office of the State employment service, but are not required to provide those reports set forth in paragraphs (D) and (E).

(C) Listing of employment openings with the employment service system pursuant to this clause shall be made at least concurrently with the use of any other recruitment source or effort and shall involve the normal obligations which attach to the placing of a bona fide job order, including the acceptance of referrals of veterans and non-veterans. The listing of employment openings does not require the hiring of any particular job applicant or from any particular group of job applicants, and nothing herein is intended to relieve the Contractor from any requirements in Executive Orders of regulations regarding nondiscrimination in employment.

(D) The reports required by paragraph (B) of this clause shall include, but not be limited to, periodic reports which shall be filed at least quarterly with the appropriate local office or, where the Contractor has more than hiring location in a State, with the central office of that State employment service. Such reports shall indicate for each hiring location (1) the number of individuals hired during the reporting period, (2) the number of non-disabled veterans of the Vietnam era hired, (3) the number of disabled veterans of the Vietnam era hired, and (4) the total number of disabled veterans hired. The reports should include covered veterans hired for on-the-job training under 38 U.S.C. 1787. The Contractor shall maintain at each hiring location copies of the reports submitted until the expiration of one year after final payment under the contract, during which time these reports and related documentation shall be made available, upon request, for examination by any authorized representatives of the contracting officer of the Secretary of Labor. Documentation would include personnel records respecting job openings, recruitment and placement.

(E) Whenever the Contractor becomes contractually bound to the listing provisions of this clause, it shall advise the employment service system in each State where it has establishments of the name and location of each hiring location in the State. As long as the Contractor is contractually bound to these provisions, and has so

advised the State system, there is no need to advise the State system of subsequent contracts. The Contractor may advise the State system when it is no longer bound by this contract clause.

(F) This clause does not apply to the listing of employment openings which occur and are filled outside of the 50 States, the District of Columbia, Puerto Rico, Guam, and the Virgin Islands.

(G) The provisions of paragraphs (B), (C), (D), and (E) of this clause do not apply to openings which the Contractor proposes to fill from within his own organization or to fill pursuant to a customary and traditional employer-union hiring arrangement for that opening.

(H) As used in this clause:

(1) "All suitable employment openings" includes, but is not limited to, openings which occur in the following job categories: Production and non-production; plant and office; laborers and mechanics; supervisory and non-supervisory; technical; and executive, administrative, and professional openings as are compensated on a salary basis of less than $25,000 per year. This term includes full-time employment, temporary employment of more than 3 days' duration, and part-time employment. It does not include openings which the Contractor proposes to fill from within his own organization or to fill pursuant to a customary and traditional employer-union hiring arrangement nor openings in an educational institution which are restricted to students of that institution. Under the most compelling circumstances an employment opening may not be suitable for listing, including such situations where the needs of the Government cannot reasonably be otherwise supplied, where listing would be contrary to national security, or where the requirement of listing would otherwise not be for the best interest of the Government.

(2) "Appropriate office of the State employment service system" means the local office of the Federal-State national system of public employment offices with assigned responsibility for serving the area where the employment opening is to be filled, including the District of Columbia, Guam, Puerto Rico, and the Virgin Islands.

(3) "Openings which the Contractor proposes to fill from within his own organization" means employment openings for which no consideration will be given to persons outside the Contractor's organization (including any affiliates, subsidiaries, and the parent companies) and includes any openings which the Contractor proposes to fill from regularly established "recall" lists.

(4) "Openings which the Contractor proposes to fill pursuant to a customary and traditional employer-union hiring arrangement" means employment openings which the Contractor proposes to fill from union halls, which is part of the customary and traditional hiring relationship which exists between the Contractor and representatives of his employees.

(I) The Contractor agrees to comply with the rules, regulations, and relevant orders of the Secretary of Labor issued pursuant to the Act.

(J) In the event of the Contractor's noncompliance with the requirements of this clause, actions for noncompliance may be taken in accordance with the rules, regulations and relevant orders of the Secretary of Labor issued pursuant to the Act.

(K) The Contractor agrees to post in conspicuous places, available to employees and applicants for employment, notices in a form to be prescribed by the Director, provided by or through the contracting officer. Such notices shall state the Contractor's obligation under the law to take affirmative action to employ and advance in employment qualified disabled veterans and veterans of the Vietnam era for employment, and the rights of applicants and employees.

(L) The Contractor will notify each labor union representative of workers with which it has a collective bargaining agreement or other contract understanding, that the Contractor is bound by the terms of the Vietnam Era Veterans Readjustment Assistance Act, and is committed to take affirmative action to employ and advance qualified disabled veterans and veterans of the Vietnam era..

(M) The Contractor will include the provisions of this clause in every subcontract or purchase order of $10,000 or more unless exempted by rules, regulations, or orders of the Secretary issued pursuant to the Act, so that such provisions will be binding upon each subcontractor or vendor. The Contractor will take such action with respect to any subcontract or purchase order as the Director of the Office of Federal Contract Compliance Programs may direct to enforce such provisions, including action for noncompliance.

Section 12

Employment Opportunities - "HUD Section 3"

General

These requirements apply to the City of Duluth contracts receiving assistance under the U.S. Department of Housing and Urban Development (HUD) Community Development Block Grant (CDBG) Program.

Type of Covered Projects

24CFR570.607 (b) of the HUD CDBG Program Regulations state in part "... that employment and other economic opportunities arising in connection with housing rehabilitation, housing construction, or other public construction projects shall to the greatest extent feasible, and consistent with existing Federal, State, and local laws and regulations be given to low- and very low-income persons.

Thresholds

In accordance with the provisions of 24CFR135.3(a) (3) (ii) (A), the requirements of this Section apply to those recipients as defined at 24CFR135.5 when the amount of this contract exceeds $200,000.

In addition, in accordance with the provisions of 24CFR135.3 (a) (3) (ii) (B), the requirements of this Section apply to any contractor or subcontractor whose contract exceeds $100,000 as a result of assistance provided under this contract.

Requirements (Section 3 Clause)

(A) The work to be performed under this contract is subject to the requirements of Section 3 of the Housing and Urban Development Act of 1968, as amended, 12 U.S.C. 1701u (section 3). The purpose of Section 3 is to ensure that employment and other economic opportunities generated by HUD assistance or HUD-assisted projects covered by section 3, shall, to the greatest extent feasible, be directed to low- and very low-income persons, particularly persons who are recipients of HUD assistance for housing.

(B) The parties to this contract agree to comply with HUD's regulations in 24 CFR part 135, which implement section 3. As evidenced by their execution of this contract, the parties to this contract certify that they are under no contractual or other impediment that would prevent them from complying with the part 135 regulations.

(C) The contractor agrees to send to each labor organization or representative of workers with which the contractor has a collective bargaining agreement, or other understanding, if any, a notice advising the labor organization or workers' representative of the contractor's commitments under this section 3 clause, and will post copies of the notice in conspicuous places at the work site where both employees and applicants for training and employment positions can see the notice. The

notice shall describe the section 3 preference, shall set forth minimum number and job titles subject to hire, availability of apprenticeship and training positions, the qualifications for each; and the name and location of the person(s) taking applications for each of the positions; and the anticipated date the work shall begin.

(D) The Contractor agrees to include this section 3 clause in every subcontract subject to compliance with regulations in 24 CFR part 135, and agrees to take appropriate action, as provided in an applicable provision of the subcontract or in this section 3 clause, upon a finding that the subcontractor is in violation of the regulations in 24 CFR part 135. The contractor will not subcontract with any subcontractor where the contractor has notice or knowledge that the subcontractor has been found in violation of the regulations in 24 CFR part 135.

(E) The contractor will certify that any vacant employment positions, including training positions, that are filled (1) after the contractor is selected but before the contract is executed, and (2) with persons other than those to whom the regulations of 24 CFR part 135 require employment opportunities to be directed, were not filled to circumvent the contractor's obligation under 24 CFR part 135.

(F) Noncompliance with HUD's regulations in 24 CFR part 135 may result in sanctions, termination of this contract for default, and debarment or suspension from future HUD-assisted contracts.

Section 13

Federal Requirements for Minority/Women Business Enterprises Contract Guidance - MPFA

General

Municipalities that receive loan funding must comply with Federal requirements concerning utilization of Minority Business Enterprises (MBE) and Women's Business Enterprises (WBE). These requirements are designed to encourage the prime contractors to utilize MBEs and WBEs whenever procurement opportunities occur.

Regulation

40 C.F.R. Section 35.3145(d) Application of other Federal Authorities, M/WBE Requirements
Executive Orders No. 11625, 12138 and 12432 - Promoting the use of M/WBEs
Section 129 of Public Law 100-590 - Small Business Administration Reauthorization and Amendment Act of 1988
Regulations detailed in the EPA's *Cross-Cutting Federal Authorities - Clean Water Act State Revolving Fund Program and Safe Drinking Water Act State Revolving Fund Program*

Implementation

The "fair share" target percentage participation proposed for this project is 3.5 percent (3.5%) for MBE and 11.5 percent (11.5%) for WBE.

If the Contractor intends to let any subcontractors for a portion of the work, the Contractor shall take affirmative steps to assure that minority and women businesses are utilized when possible as sources of supplies, equipment, construction and services. Affirmative steps shall include the following:

a) Include qualified minority businesses on solicitation lists.
b) Assure that minority businesses are solicited whenever they are potential sources.
c) When economically feasible, divide total requirements into smaller tasks or quantities so as to permit maximum small and minority business participation.
d) Where the requirement permits, establish delivery schedules, which will encourage participation by minority businesses.
e) Use the services and assistance of the Office of Minority Business Enterprise of the Department of Commerce.

The low bidder will be required to submit to the City of Duluth documentation of his good faith efforts to meet the targeted goals of utilizing MBEs and WBEs.

Section 14 - Forms

Minnesota Department of Transportation and City of Duluth, Minnesota funded certified payroll forms

- MnDOT Prime Contractor's-Subcontractor's Statement of Compliance form (12/2010)
  www.dot.state.mn.us/const/labor/forms.html
- Certified Payroll Forms
  http://www.dol.gov/forms/whd/wh347.pdf
  use front side only

U. S. Department of Housing and Urban Development and federal government funded certified payroll forms

- Statement of Compliance Form & Certified Payroll Forms
  http://www.dol.gov/forms/whd/wh347.pdf
  (use reverse side for Statement of Compliance form)
- MnDOT Prime Contractor's-Subcontractor's Statement of Compliance form (12/2010)
  www.dot.state.mn.us/const/labor/forms.html

Minnesota Department of Transportation Trucking Requirements

- Month End Trucking Report Form A and Form B
- Month End Trucking Report Statement of Compliance
- Definitions, instructions, forms:
  www.dot.state.mn.us/const/labor/forms.html

CITY OF DULUTH

PAYMENT BOND

KNOW ALL MEN BY THESE PRESENTS: That we:

_____
(contractor's name)

(hereinafter called the "Contractor") located at: _____

_____
(contractor's address)

and _____
(surety's name)

(a corporation holding a certificate of the Insurance Commissioner of the State of Minnesota showing that it is authorized to contract as a surety, hereinafter called the "Surety") located at:

_____
(surety's address)

are held and firmly bound unto the City of Duluth (hereinafter called the "Owner"), for the benefit of persons furnishing labor and materials for the contract set forth below, in the penal sum of

_____

Dollars ($_____) for the payment of which we bind ourselves, our heirs, executors and administrators, successors and assigns, for the payment of all labor and materials supplied by any person in the performance of a written contract for the purpose of:

_____

_____

according to plans, profiles, and specifications thereto annexed. A copy of that contract is incorporated herein by reference and is made a part hereof as if fully copied herein.

NOW, THEREFORE, THE CONDITIONS OF THIS OBLIGATION ARE SUCH That,

A) If the Contractor shall make payments, as they may become due, to all persons supplying "labor and materials," as defined in Minnesota Statutes Section 574.26, used directly or indirectly by the Contractor, or his Subcontractor, in the prosecution of the work provided for in the contract,

B) If the Contractor shall indemnify the owner or other claimant for all costs that may accrue on account of the enforcing of the terms of the bond, if action is brought on the bond, including reasonable attorney's fees, in any case where such action is successfully maintained,

Then, this obligation shall be void; otherwise it shall remain in full force and effect.

And, the said Contractor and Surety agree that in accordance with Minnesota Statutes Section 574.26 not only said City, but any person furnishing “labor and materials,” as defined in Minnesota Statutes 574.26, may sue on this bond for their use on account of any sums due them for anything so furnished.

The Contractor and the Sureties do hereby expressly waive any objection that might be interposed as to the right of the Owner to require a bond containing the foregoing provisions, and they do hereby further expressly waive any defense which they or either and any of them might interpose to an action brought hereon by any person, firm, or corporation, including subcontractors, materialmen and third persons, for work, labor, services, supplies or material performed, rendered or furnished as aforesaid, upon the ground that there is no law authorizing the Owner to require the foregoing provisions to be placed in this bond.

And the Surety, for value received, hereby stipulates and agrees that the obligations of the Surety and this bond shall in no way be impaired or affected by any extension of time, modification, omission, addition or change in or to the contract or the work to be performed thereunder, or by any payment thereunder before the time required therein, or by any waiver of any provision thereof, or by any assignment, subletting or other transfer thereof, or of any part thereof, or of any work to be performed, or of any moneys due or to become due thereunder; and the said Surety does hereby waive notice of any and all such extensions, modifications, omissions, additions, changes, payments, waivers, assignments, subcontracts and transfers, and hereby stipulates and agrees that any and all things done and omitted to be done by and in relation to executors, administrators, successors, assignees, subcontractors and other transferees, shall have the same effect as to said Surety as though done or omitted to be done by and in relation to the Contractor.

Signed this _____ day of _____, 20___.

_____
Name of Principal

_____
By

_____
Name of Surety

By _____
Attorney-in-Fact

ACKNOWLEDGEMENTS

State of Minnesota)
) ss. Principal – Individual
County of St. Louis)

This instrument was acknowledged before me on _____
by _____.

Notary Seal _____
Notary Public

State of Minnesota)
) ss. Principal – Corporate or Partnership
County of St. Louis)

This instrument was acknowledged before me on _____
by _____ as _____
of _____.

Notary Seal _____
Notary Public

State of Minnesota)
) ss. Surety
County of St. Louis)

Be It Known, That on this _____ day of _____ A. D., 20___, came before me personally _____, to me personally known, who being by me duly sworn, did say that he/she is the _____ (title) of

_____

the above named corporation which executed the foregoing bond as surety; that the seal affixed to the foregoing instrument is the corporate seal of said corporation; that said instrument was executed in behalf of said corporation, by authority of its Board of Directors; that said corporation hold a certificate of the Insurance Commissioner of the State of Minnesota showing that it is authorized to contract as a surety; and said _____ acknowledged said instrument to be the free act and deed of said corporation.

Notary Seal _____
Notary Public

APPROVED AS TO FORM, CORRECTNESS AND VALIDTY HEREOF

Dated this _____ day of _____, 20 ___

_____

Assistant City Attorney Duluth MN

Dated this _____ day of _____, 20 ___

_____

Finance Director Duluth MN

CITY OF DULUTH

PERFORMANCE BOND

KNOW ALL MEN BY THESE PRESENTS: That we:

_____
(contractor's name)

(hereinafter called the "Contractor") located at:_____

_____
(contractor's address)

and _____
(surety's name)

(a corporation holding a certificate of the Insurance Commissioner of the State of Minnesota showing that it is authorized to contract as a surety, hereinafter called the "Surety") located at:

_____
(surety's address)

are held and firmly bound unto the City of Duluth (hereinafter called the "Owner"), in the penal sum of _____ Dollars ($_____) for the payment of which we bind ourselves, our heirs, executors and administrators, successors and assigns, for the faithful performance of a written contract for the purpose of:

_____

_____

_____

according to plans, profiles, and specifications thereto annexed. A copy of that contract is incorporated herein by reference and is made a part hereof as if fully copied herein.

NOW, THEREFORE, THE CONDITIONS OF THIS OBLIGATION ARE SUCH That,

A) If the Contractor shall in all respects comply with the terms and conditions of the Contract (which includes the contract documents) and such alterations as may be made in said contract as documents therein provide for, and shall complete the contract in accordance with its terms,

B) If the Contractor shall indemnify, defend and save harmless the owner from all costs, expenses, damages, injury or conduct, want or care or skill, negligence or default, including patent infringement on the part of the Contractor, agents or employees, in the

execution or performance of the contract,

C) If the Contractor shall indemnify the owner for all costs that may accrue on account of the enforcing of the terms of the bond, if action is brought on the bond, including reasonable attorney's fees, in any case where such action is successfully maintained,

D) If the Contractor shall comply with all laws pertaining to doing the work under the contract,

Then, this obligation shall be void; the Contractor and Surety jointly and severally agree to pay to the Owner any difference between the sum to which the Contractor will be entitled on the completion of the contract and that which the Owner may be obliged to pay for the completion of the work by contract or otherwise, and any damages, direct or indirect, or consequential, which the Owner may sustain on account of the work, or on account of the failure of the Contractor to properly and in all things, keep and execute all of the provisions of the Contract, provided however that Surety's liability to pay damages is limited to the amount of the Performance Bond as set forth above.

And, the said Contractor and Surety hereby further bind themselves, their successors, executors, administrators and assigns, jointly and severally, that they will employ and fully protect the said Owner against and will pay any and all amounts, damages, costs and judgements which may be recovered against or which the Owner may be called upon to pay to any person or corporation by reason of any damage arising from the performance of said work, repair or maintenance thereof, or the manner of doing the same, or the neglect of the said Contractor or his agents or servants, or the improper performance of the said work by the Contractor or his agents or servants, or the infringements of any patent rights by reason of the use of any material furnished or work done, as aforesaid, or otherwise. For the purpose of this paragraph, a subcontractor shall be deemed to be the agent or employee of the Contractor to the extent of his subcontract.

The Contractor and the Sureties do hereby expressly waive any objection that might be interposed as to the right of the Owner to require a bond containing the foregoing provisions, and they do hereby further expressly waive any defense which they or either and any of them might interpose to an action brought hereon by any person, firm, or corporation, including subcontractors, materialmen and third persons, for work, labor, services, supplies or material performed, rendered or furnished as aforesaid, upon the ground that there is no law authorizing the Owner to require the foregoing provisions to be placed in this bond.

And the Surety, for value received, hereby stipulates and agrees that the obligations of the Surety and this bond shall in no way be impaired or affected by any extension of time, modification, omission, addition or change in or to the contract or the work to be performed

thereunder, or by any payment thereunder before the time required therein, or by any waiver of any provision thereof, or by any assignment, subletting or other transfer thereof, or of any part thereof, or of any work to be performed, or of any moneys due or to become due thereunder; and the said Surety does hereby waive notice of any and all such extensions, modifications, omissions, additions, changes, payments, waivers, assignments, subcontracts and transfers, and hereby stipulates and agrees that any and all things done and omitted to be done by and in relation to executors, administrators, successors, assignees, subcontractors and other transferees, shall have the same effect as to said Surety as though done or omitted to be done by and in relation to the Contractor.

Signed this _____ day of _____, 20___.

_____
Name of Principal

_____
By

_____
Name of Surety

By _____
Attorney-in-Fact

ACKNOWLEDGEMENTS

State of Minnesota)
) ss. Principal – Individual
County of St. Louis)

This instrument was acknowledged before me on _____
by _____.

Notary Seal

_____
Notary Public

State of Minnesota)
) ss. Principal – Corporate or Partnership
County of St. Louis)

This instrument was acknowledged before me on _____
by _____ as _____
of _____.

Notary Seal

_____
Notary Public

State of Minnesota)
) ss. Surety
County of St. Louis)

Be It Known, That on this _____ day of _____ A. D., 20___, came before me personally _____, to me personally known, who being by me duly sworn, did say that he/she is the _____(title) of _____ the above named corporation which executed the foregoing bond as surety; that the seal affixed to the foregoing instrument is the corporate seal of said corporation; that said instrument was executed in behalf of said corporation, by authority of its Board of Directors; that said corporation hold a certificate of the Insurance Commissioner of the State of Minnesota showing that it is authorized to contract as a surety; and said _____ acknowledged said instrument to be the free act and deed of said corporation.

Notary Seal

_____
Notary Public

APPROVED AS TO FORM, CORRECTNESS AND VALIDTY HEREOF

Dated this _____ day of _____, 20 ___

_____

Assistant City Attorney Duluth MN

Dated this _____ day of _____, 20 ___

_____

Finance Director Duluth MN

MINNESOTA DEPARTMENT OF LABOR AND INDUSTRY PREVAILING WAGES FOR STATE FUNDED CONSTRUCTION PROJECTS

THIS NOTICE MUST BE POSTED ON THE JOBSITE IN A CONSPICUOUS PLACE

Construction Type: Highway and Heavy

Region Number: 01

Counties within region:

- CARLTON-09
- COOK-16
- ITASCA-31
- KOOCHICHING-36
- LAKE-38
- PINE-58
- ST. LOUIS-69

Effective: 2016-11-07 Revised: 2017-01-17

This project is covered by Minnesota prevailing wage statutes. Wage rates listed below are the minimum hourly rates to be paid on this project.

All hours worked in excess of eight (8) hours per day or forty (40) hours per week shall be paid at a rate of one and one half (1 1/2) times the basic hourly rate.

Violations should be reported to:

Department of Transportation
Office of Construction
Transportation Building MS650
John Ireland Blvd
St. Paul, MN 55155
(651) 366-4209

Refer questions concerning the prevailing wage rates to:

Department of Labor and Industry
Prevailing Wage Section
443 Lafayette Road N
St Paul, MN 55155
(651) 284-5091
DLI.PrevWage@state.mn.us

LABOR CODE AND CLASS

		EFFECT DATE	BASIC RATE	FRINGE RATE	TOTAL RATE
LABORERS (101 - 112) (SPECIAL CRAFTS 701 - 730)					
101	LABORER, COMMON (GENERAL LABOR WORK)	2016-11-07	29.23	17.02	46.25
102	LABORER, SKILLED (ASSISTING SKILLED CRAFT JOURNEYMAN)	2016-11-07	29.23	17.02	46.25
103	LABORER, LANDSCAPING (GARDENER, SOD LAYER AND NURSERY OPERATOR)	2016-11-07	21.17	13.99	35.16
104	FLAG PERSON	2016-11-07	29.23	17.02	46.25
105	WATCH PERSON	2016-11-07	25.68	16.77	42.45
106	BLASTER	2016-11-07	32.23	17.02	49.25
107	PIPELAYER (WATER, SEWER AND GAS)	2016-11-07	31.73	17.02	48.75
108	TUNNEL MINER	2016-11-07	29.93	17.02	46.95
109	UNDERGROUND AND OPEN DITCH LABORER (EIGHT FEET BELOW STARTING GRADE LEVEL)	2016-11-07	29.93	17.02	46.95
110	SURVEY FIELD TECHNICIAN (OPERATE TOTAL STATION, GPS RECEIVER, LEVEL, ROD OR RANGE POLES, STEEL TAPE MEASUREMENT; MARK AND DRIVE STAKES; HAND OR POWER DIGGING FOR AND IDENTIFICATION OF MARKERS OR MONUMENTS; PERFORM AND CHECK CALCULATIONS; REVIEW AND UNDERSTAND CONSTRUCTION PLANS AND LAND SURVEY MATERIALS). THIS CLASSIFICATION DOES NOT APPLY TO THE WORK PERFORMED ON A PREVAILING WAGE PROJECT BY A LAND SURVEYOR WHO IS LICENSED PURSUANT TO MINNESOTA STATUTES, SECTIONS 326.02 TO 326.15.	2016-11-07	29.23	17.02	46.25
111	TRAFFIC CONTROL PERSON (TEMPORARY SIGNAGE)	2016-11-07	29.23	17.02	46.25

112	QUALITY CONTROL TESTER (FIELD AND COVERED OFF-SITE FACILITIES; TESTING OF AGGREGATE, ASPHALT, AND CONCRETE MATERIALS); LIMITED TO MN DOT HIGHWAY AND HEAVY CONSTRUCTION PROJECTS WHERE THE MN DOT HAS RETAINED QUALITY ASSURANCE PROFESSIONALS TO REVIEW AND INTERPRET THE RESULTS OF QUALITY CONTROL TESTERS. SERVICES PROVIDED BY THE CONTRACTOR.	2016-11-07	22.15	12.76	34.91

SPECIAL EQUIPMENT (201 - 204)

201	ARTICULATED HAULER	2016-11-07	33.54	18.90	52.44
		2017-05-01	33.74	19.70	53.44
202	BOOM TRUCK	2016-11-07	33.54	18.90	52.44
		2017-05-01	33.74	19.70	53.44
203	LANDSCAPING EQUIPMENT, INCLUDES HYDRO SEEDER OR MULCHER, SOD ROLLER, FARM TRACTOR WITH ATTACHMENT SPECIFICALLY SEEDING, SODDING, OR PLANT, AND TWO-FRAMED FORKLIFT (EXCLUDING FRONT, POSIT-TRACK, AND SKID STEER LOADERS), NO EARTHWORK OR GRADING FOR ELEVATIONS	2016-11-07	29.29	18.90	48.19
		2017-05-01	29.49	19.70	49.19
204	OFF-ROAD TRUCK	2016-11-07	31.37	16.70	48.07
205	PAVEMENT MARKING OR MARKING REMOVAL EQUIPMENT (ONE OR TWO PERSON OPERATORS); SELF-PROPELLED TRUCK OR TRAILER MOUNTED UNITS.	2016-11-07	28.36	19.32	47.68

HIGHWAY/HEAVY POWER EQUIPMENT OPERATOR

GROUP 2	2016-11-07	34.39	18.90	53.29
	2017-05-01	34.59	19.70	54.29

302 HELICOPTER PILOT (HIGHWAY AND HEAVY ONLY)

303 CONCRETE PUMP (HIGHWAY AND HEAVY ONLY)

304 ALL CRANES WITH OVER 135-FOOT BOOM, EXCLUDING JIB (HIGHWAY AND HEAVY ONLY)

305 DRAGLINE, CRAWLER, HYDRAULIC BACKHOE (TRACK OR WHEEL MOUNTED) AND/OR OTHER SIMILAR EQUIPMENT WITH SHOVEL-TYPE CONTROLS THREE CUBIC YARDS AND OVER MANUFACTURER.S RATED CAPACITY INCLUDING ALL ATTACHMENTS. (HIGHWAY AND HEAVY ONLY)

306 GRADER OR MOTOR PATROL

307 PILE DRIVING (HIGHWAY AND HEAVY ONLY)

308 TUGBOAT 100 H.P. AND OVER WHEN LICENSE REQUIRED (HIGHWAY AND HEAVY ONLY)

GROUP 3	2016-11-07	33.84	18.90	52.74
	2017-05-01	34.04	19.70	53.74

309 ASPHALT BITUMINOUS STABILIZER PLANT

310 CABLEWAY

311 CONCRETE MIXER, STATIONARY PLANT (HIGHWAY AND HEAVY ONLY)

312 DERRICK (GUY OR STIFFLEG)(POWER)(SKIDS OR STATIONARY) (HIGHWAY AND HEAVY ONLY)

313 DRAGLINE, CRAWLER, HYDRAULIC BACKHOE (TRACK OR WHEEL MOUNTED) AND/OR SIMILAR EQUIPMENT WITH SHOVEL-TYPE CONTROLS, UP TO THREE CUBIC YARDS MANUFACTURER.S RATED CAPACITY INCLUDING ALL ATTACHMENTS (HIGHWAY AND HEAVY ONLY)

314 DREDGE OR ENGINEERS, DREDGE (POWER) AND ENGINEER

315 FRONT END LOADER, FIVE CUBIC YARDS AND OVER INCLUDING ATTACHMENTS. (HIGHWAY AND HEAVY ONLY)

316 LOCOMOTIVE CRANE OPERATOR

317 MIXER (PAVING) CONCRETE PAVING, ROAD MOLE, INCLUDING MUCKING OPERATIONS, CONWAY OR SIMILAR TYPE

318 MECHANIC . WELDER ON POWER EQUIPMENT (HIGHWAY AND HEAVY ONLY)

319 TRACTOR . BOOM TYPE (HIGHWAY AND HEAVY ONLY)

320 TANDEM SCRAPER

321 TRUCK CRANE . CRAWLER CRANE (HIGHWAY AND HEAVY ONLY)

322 TUGBOAT 100 H.P AND OVER (HIGHWAY AND HEAVY ONLY)

GROUP 4	2016-11-07	33.54	18.90	52.44
	2017-05-01	33.74	19.70	53.44

323 AIR TRACK ROCK DRILL

324 AUTOMATIC ROAD MACHINE (CMI OR SIMILAR) (HIGHWAY AND HEAVY ONLY)

325 BACKFILLER OPERATOR

326 CONCRETE BATCH PLANT OPERATOR (HIGHWAY AND HEAVY ONLY)

327 BITUMINOUS ROLLERS, RUBBER TIRED OR STEEL DRUMMED (EIGHT TONS AND OVER)

328 BITUMINOUS SPREADER AND FINISHING MACHINES (POWER), INCLUDING PAVERS, MACRO SURFACING AND MICRO SURFACING, OR SIMILAR TYPES (OPERATOR AND SCREED PERSON)

329 BROKK OR R.T.C. REMOTE CONTROL OR SIMILAR TYPE WITH ALL ATTACHMENTS

330 CAT CHALLENGER TRACTORS OR SIMILAR TYPES PULLING ROCK WAGONS, BULLDOZERS AND SCRAPERS

331 CHIP HARVESTER AND TREE CUTTER

332 CONCRETE DISTRIBUTOR AND SPREADER FINISHING MACHINE, LONGITUDINAL FLOAT, JOINT MACHINE, AND SPRAY MACHINE

333 CONCRETE MIXER ON JOBSITE (HIGHWAY AND HEAVY ONLY)

334 CONCRETE MOBIL (HIGHWAY AND HEAVY ONLY)

335 CRUSHING PLANT (GRAVEL AND STONE) OR GRAVEL WASHING, CRUSHING AND SCREENING PLANT

336 CURB MACHINE

337 DIRECTIONAL BORING MACHINE

338 DOPE MACHINE (PIPELINE)

339 DRILL RIGS, HEAVY ROTARY OR CHURN OR CABLE DRILL (HIGHWAY AND HEAVY ONLY)

340 DUAL TRACTOR

341 ELEVATING GRADER

342 FORK LIFT OR STRADDLE CARRIER (HIGHWAY AND HEAVY ONLY)

343 FORK LIFT OR LUMBER STACKER (HIGHWAY AND HEAVY ONLY)

344 FRONT END, SKID STEER OVER 1 TO 5 C YD

345 GPS REMOTE OPERATING OF EQUIPMENT

346 HOIST ENGINEER (POWER) (HIGHWAY AND HEAVY ONLY)

347 HYDRAULIC TREE PLANTER

348 LAUNCHER PERSON (TANKER PERSON OR PILOT LICENSE)

349 LOCOMOTIVE (HIGHWAY AND HEAVY ONLY)

350 MILLING, GRINDING, PLANNING, FINE GRADE, OR TRIMMER MACHINE

351 MULTIPLE MACHINES, SUCH AS AIR COMPRESSORS, WELDING MACHINES, GENERATORS, PUMPS (HIGHWAY AND HEAVY ONLY)

352 PAVEMENT BREAKER OR TAMPING MACHINE (POWER DRIVEN) MIGHTY MITE OR SIMILAR TYPE

353 PICKUP SWEEPER, ONE CUBIC YARD AND OVER HOPPER CAPACITY(HIGHWAY AND HEAVY ONLY)

354 PIPELINE WRAPPING, CLEANING OR BENDING MACHINE

355 POWER PLANT ENGINEER, 100 KWH AND OVER (HIGHWAY AND HEAVY ONLY)

356 POWER ACTUATED HORIZONTAL BORING MACHINE, OVER SIX INCHES

357 PUGMILL

358 PUMPCRETE (HIGHWAY AND HEAVY ONLY)

359 RUBBER-TIRED FARM TRACTOR WITH BACKHOE INCLUDING ATTACHMENTS (HIGHWAY AND HEAVY ONLY)

360 SCRAPER

361 SELF-PROPELLED SOIL STABILIZER

362 SLIP FORM (POWER DRIVEN) (PAVING)

363 TIE TAMPER AND BALLAST MACHINE

364 TRACTOR, BULLDOZER (HIGHWAY AND HEAVY ONLY)

365 TRACTOR, WHEEL TYPE, OVER 50 H.P. WITH PTO UNRELATED TO LANDSCAPING (HIGHWAY AND HEAVY ONLY)

366 TRENCHING MACHINE (SEWER, WATER, GAS) EXCLUDES WALK BEHIND TRENCHER (HIGHWAY AND HEAVY ONLY)

367 TUB GRINDER, MORBARK, OR SIMILAR TYPE

368 WELL POINT DISMANTLING OR INSTALLATION (HIGHWAY AND HEAVY ONLY)

GROUP 5	2016-11-07	30.50	18.90	49.40
	2016-11-07	30.50	18.90	49.40
	2017-05-01	30.70	19.70	50.40

369 AIR COMPRESSOR, 600 CFM OR OVER (HIGHWAY AND HEAVY ONLY)

370 BITUMINOUS ROLLER (UNDER EIGHT TONS)

371 CONCRETE SAW (MULTIPLE BLADE) (POWER OPERATED)

372 FORM TRENCH DIGGER (POWER)

373 FRONT END, SKID STEER UP TO 1C YD

374 GUNITE GUNALL (HIGHWAY AND HEAVY ONLY)

375 HYDRAULIC LOG SPLITTER

376 LOADER (BARBER GREENE OR SIMILAR TYPE)

377 POST HOLE DRIVING MACHINE/POST HOLE AUGER

378 POWER ACTUATED AUGER AND BORING MACHINE

379 POWER ACTUATED JACK

380 PUMP (HIGHWAY AND HEAVY ONLY)

381 SELF-PROPELLED CHIP SPREADER (FLAHERTY OR SIMILAR)

382 SHEEP FOOT COMPACTOR WITH BLADE . 200 H.P. AND OVER

383 SHOULDERING MACHINE (POWER) APSCO OR SIMILAR TYPE INCLUDING SELF-PROPELLED SAND AND CHIP SPREADER

384 STUMP CHIPPER AND TREE CHIPPER

385 TREE FARMER (MACHINE)

GROUP 6	2016-11-07	29.29	18.90	48.19
	2017-05-01	29.49	19.70	49.19

387 CAT, CHALLENGER, OR SIMILAR TYPE OF TRACTORS, WHEN PULLING DISK OR ROLLER

388 CONVEYOR (HIGHWAY AND HEAVY ONLY)

389 DREDGE DECK HAND

390 FIRE PERSON OR TANK CAR HEATER (HIGHWAY AND HEAVY ONLY)

391 GRAVEL SCREENING PLANT (PORTABLE NOT CRUSHING OR WASHING)

392 GREASER (TRACTOR) (HIGHWAY AND HEAVY ONLY)

393 LEVER PERSON

394 OILER (POWER SHOVEL, CRANE, TRUCK CRANE, DRAGLINE, CRUSHERS, AND MILLING MACHINES, OR OTHER SIMILAR HEAVY EQUIPMENT) (HIGHWAY AND HEAVY ONLY)

395 POWER SWEEPER

396 SHEEP FOOT ROLLER AND ROLLERS ON GRAVEL COMPACTION, INCLUDING VIBRATING ROLLERS

397 TRACTOR, WHEEL TYPE, OVER 50 H.P., UNRELATED TO LANDSCAPING

TRUCK DRIVERS

GROUP 1	2016-11-07	29.70	15.65	45.35
	2017-05-01	30.25	16.60	46.85

601 MECHANIC . WELDER

602 TRACTOR TRAILER DRIVER

603 TRUCK DRIVER (HAULING MACHINERY INCLUDING OPERATION OF HAND AND POWER OPERATED WINCHES)

GROUP 2	2016-11-07	29.15	15.65	44.80
	2017-05-01	29.70	16.60	46.30

604 FOUR OR MORE AXLE UNIT, STRAIGHT BODY TRUCK

GROUP 3	2016-11-07	29.05	15.65	44.70
	2017-05-01	29.60	16.60	46.20

605 BITUMINOUS DISTRIBUTOR DRIVER

606 BITUMINOUS DISTRIBUTOR (ONE PERSON OPERATION)

607 THREE AXLE UNITS

GROUP 4	2016-11-07	28.20	14.80	43.00

608 BITUMINOUS DISTRIBUTOR SPRAY OPERATOR (REAR AND OILER)

609 DUMP PERSON

610 GREASER

611 PILOT CAR DRIVER

612 RUBBER-TIRED, SELF-PROPELLED PACKER UNDER 8 TONS

613 TWO AXLE UNIT

614 SLURRY OPERATOR

615 TANK TRUCK HELPER (GAS, OIL, ROAD OIL, AND WATER)

616 TRACTOR OPERATOR, UNDER 50 H.P.

SPECIAL CRAFTS

701 HEATING AND FROST INSULATORS	2016-11-07	40.31	16.75	57.06
702 BOILERMAKERS	2016-11-07	35.15	27.02	62.17
703 BRICKLAYERS	2016-11-07	32.91	22.82	55.73
704 CARPENTERS	2016-11-07	34.57	18.16	52.73
705 CARPET LAYERS (LINOLEUM)	2016-11-07	32.13	12.85	44.98
706 CEMENT MASONS	2016-11-07	33.95	17.63	51.58
707 ELECTRICIANS	2016-11-07	34.92	25.06	59.98
	2017-06-03	35.83	25.71	61.54
711 GROUND PERSON	2016-11-07	21.61	11.03	32.64
712 IRONWORKERS	2016-11-07	31.54	24.90	56.44
713 LINEMAN	2016-11-07	32.27	14.11	46.38
714 MILLWRIGHT	2016-11-07	36.95	16.21	53.16

715	PAINTERS (INCLUDING HAND BRUSHED, HAND SPRAYED, AND THE TAPING OF PAVEMENT MARKINGS)	2016-11-07	30.06	17.62	47.68
716	PILEDRIVER (INCLUDING VIBRATORY DRIVER OR EXTRACTOR FOR PILING AND SHEETING OPERATIONS)	2016-11-07	34.57	18.16	52.73
717	PIPEFITTERS . STEAMFITTERS	2016-11-07	40.85	18.66	59.51
719	PLUMBERS	2016-11-07	40.85	18.66	59.51
721	SHEET METAL WORKERS	2016-11-07	30.51	24.28	54.79
723	TERRAZZO WORKERS	FOR RATE CALL 651-284-5091 OR EMAIL DLI.PREVWAGE@STATE.MN.US			
724	TILE SETTERS	FOR RATE CALL 651-284-5091 OR EMAIL DLI.PREVWAGE@STATE.MN.US			
725	TILE FINISHERS	FOR RATE CALL 651-284-5091 OR EMAIL DLI.PREVWAGE@STATE.MN.US			
727	WIRING SYSTEM TECHNICIAN	2016-11-07	36.90	14.97	51.87
		2017-07-01	37.82	14.97	52.79
728	WIRING SYSTEMS INSTALLER	2016-11-07	25.84	12.40	38.24
		2017-07-01	26.49	12.40	38.89
729	ASBESTOS ABATEMENT WORKER	2016-11-07	29.20	17.43	46.63
		2017-01-01	29.95	18.03	47.98
730	SIGN ERECTOR	FOR RATE CALL 651-284-5091 OR EMAIL DLI.PREVWAGE@STATE.MN.US			

General Decision Number: MN170105 07/21/2017 MN105

Superseded General Decision Number: MN20160105

State: Minnesota

Construction Type: Heavy

County: St Louis County in Minnesota.

HEAVY CONSTRUCTION PROJECTS

Note: Under Executive Order (EO) 13658, an hourly minimum wage of $10.20 for calendar year 2017 applies to all contracts subject to the Davis-Bacon Act for which the contract is awarded (and any solicitation was issued) on or after January 1, 2015. If this contract is covered by the EO, the contractor must pay all workers in any classification listed on this wage determination at least $10.20 (or the applicable wage rate listed on this wage determination, if it is higher) for all hours spent performing on the contract in calendar year 2017. The EO minimum wage rate will be adjusted annually. Additional information on contractor requirements and worker protections under the EO is available at www.dol.gov/whd/govcontracts.

Modification Number	Publication Date
0	01/06/2017
1	02/03/2017
2	03/03/2017
3	04/14/2017
4	05/19/2017
5	06/23/2017
6	07/14/2017
7	07/21/2017

BOIL0647-004 01/01/2017

	Rates	Fringes
BOILERMAKER	$ 35.65	29.89

CARP0361-020 05/01/2016

ST LOUIS COUNTY (Southern 1/3 including Cotton, Floodwood, Fond Du Lac, and Proctor)

	Rates	Fringes
CARPENTER (Including Form Work)	$ 34.57	18.16

CARP0361-021 05/01/2016

ST LOUIS (Duluth)

	Rates	Fringes
CARPENTER (Including Form Work)	$ 34.57	18.16

CARP0606-010 05/01/2015

ST LOUIS COUNTY (Northeast 2/3 including Cook, Cusson, Ely; and Western part including Chisholm, Greaney, and Orr)

	Rates	Fringes
CARPENTER (Including Form Work)	$ 34.11	17.08

ELEC0242-012 06/04/2017

ST. LOUIS (South part bounded on the north by the north line of Kelsey Township extended east & west)

	Rates	Fringes
ELECTRICIAN	$ 35.90	25.64

ELEC0294-006 05/29/2016

ST. LOUIS (North part bounded on the south by the south line of Ellsburg Township, extended east & west)

	Rates	Fringes
ELECTRICIAN	$ 35.60	71.72%

---

* ENGI0049-064 05/01/2017

	Rates	Fringes
OPERATOR: Power Equipment		
Group 2	$ 35.54	19.70
Group 3	$ 34.99	19.70
Group 4	$ 34.69	19.70
Group 5	$ 31.65	19.70
Group 6	$ 30.44	19.70

POWER EQUIPMENT OPERATOR CLASSIFICATIONS

GROUP 2: Crane with over 135' Boom, excluding jib; Dragline & Hydraulic Backhoe with shovel-type controls, 3 cubic yards and over; Grader/Blade finishing earthwork and bituminous.

GROUP 3: Dragline & Hydraulic Backhoe with shovel-type controls up to 3 cubic yards; Loader 5 cu yd and over; Mechanic; Tandem Scraper; Truck Crane; Crawler Crane

GROUP 4: Bituminous Roller 8 tons & over; Crusher/Crushing Plant; Drill Rig; Elevating Grader; Loader over 1 cu yd; Grader; Pump; Scraper up; to 32 cu yd; Farm Tractor with Backhoe attachment; Skid Steer Loader over 1 cu yd with Backhoe attachment; Bulldozer over 50 hp.

GROUP 5: Bituminous Roller under 8 tons; Bituminous Rubber Tire Roller; Loader up to 1 cu yd; Bulldozer 50 hp or less.

GROUP 6: Oiler; Self-Propelled Vibrating Packer 35 hp and over.

CRANE OVER 135' BOOM, EXCLUDING JIB - $ .25 PREMIUM;
CRANE OVER 200' BOOM, EXCLUDING JIB - $ .50 PREMIUM

UNDERGROUND WORK:
UNNELS, SHAFTS, ETC. - $ .25 PREMIUM
UNDER AIR PRESSURE - $ .50 PREMIUM

HAZARDOUS WASTE PROJECTS (PPE Required):
LEVEL A - $1.25 PREMIUM
LEVEL B - $ .90 PREMIUM
LEVEL C - $ .60 PREMIUM

IRON0512-028 06/05/2016

	Rates	Fringes
IRONWORKER, STRUCTURAL AND REINFORCING	$ 31.54	24.90

LABO1091-006 05/01/2016

ST LOUIS (South of T. 55 N)

	Rates	Fringes
LABORERS		
(1) Common or General	$ 29.13	17.12
(2) Mason Tender Cement/Concrete	$ 29.33	17.12
(6) Pipe Layer	$ 31.63	17.12

LABO1091-007 05/01/2016

SOUTHERN ST. LOUIS COUNTY

	Rates	Fringes
LABORER		
Common or General (Natural Gas Pipeline only)	$ 29.13	17.12

LABO1097-002 05/01/2014

NORTHERN ST. LOUIS COUNTY

	Rates	Fringes
LABORER		
Common or General (Natural Gas Pipeline only)	$ 25.02	18.16

LABO1097-005 05/01/2014

ST LOUIS (North of T. 55 N)

	Rates	Fringes
LABORERS		
(1) Common or General	$ 25.02	18.16
(2) Mason Tender Cement/Concrete	$ 25.22	18.16
(6) Pipe Layer	$ 27.52	18.16

PLAS0633-036 05/01/2017

ST. LOUIS COUNTY (North of T 55N)

	Rates	Fringes
CEMENT MASON/CONCRETE FINISHER	$ 33.95	18.13

PLAS0633-039 05/01/2017

ST. LOUIS COUNTY (South of T 55N)

	Rates	Fringes
CEMENT MASON/CONCRETE FINISHER	$ 33.95	18.13

TEAM0160-018 05/01/2017

	Rates	Fringes
TRUCK DRIVER (DUMP)		
(1) Articulated Dump Truck	$ 30.25	16.60
(2) 3 Axles/4 Axles; 5 Axles receive $0.30 additional per hour	$ 29.70	16.60
(3) Tandem Axles; & Single Axles	$ 29.60	16.60

SUMN2009-072 09/28/2009

	Rates	Fringes
LABORER: Landscape	$ 12.88	4.61

WELDERS - Receive rate prescribed for craft performing operation to which welding is incidental.

==========

Note: Executive Order (EO) 13706, Establishing Paid Sick Leave for Federal Contractors applies to all contracts subject to the Davis-Bacon Act for which the contract is awarded (and any solicitation was issued) on or after January 1, 2017. If this contract is covered by the EO, the contractor must provide employees with 1 hour of paid sick leave for every 30 hours they work, up to 56 hours of paid sick leave each year. Employees must be permitted to use paid sick leave for their own illness, injury or other health-related needs, including preventive care; to assist a family member (or person who is like family to the employee) who is ill, injured, or has other health-related needs, including preventive care; or for reasons resulting from, or to assist a family member (or person who is like family to the employee) who is a victim of, domestic violence, sexual assault, or stalking. Additional information on contractor requirements and worker protections under the EO is available at www.dol.gov/whd/govcontracts.

Unlisted classifications needed for work not included within the scope of the classifications listed may be added after award only as provided in the labor standards contract clauses (29CFR 5.5 (a) (1) (ii)).

The body of each wage determination lists the classification and wage rates that have been found to be prevailing for the cited type(s) of construction in the area covered by the wage determination. The classifications are listed in alphabetical order of "identifiers" that indicate whether the particular rate is a union rate (current union negotiated rate for local), a survey rate (weighted average rate) or a union average rate (weighted union average rate).

Union Rate Identifiers

A four letter classification abbreviation identifier enclosed in dotted lines beginning with characters other than "SU" or "UAVG" denotes that the union classification and rate were prevailing for that classification in the survey. Example: PLUM0198-005 07/01/2014. PLUM is an abbreviation identifier of the union which prevailed in the survey for this classification, which in this example would be Plumbers. 0198 indicates the local union number or district council number where applicable, i.e., Plumbers Local 0198. The next number, 005 in the example, is an internal number used in processing the wage determination. 07/01/2014 is the effective date of the most current negotiated rate, which in this example is July 1, 2014.

Union prevailing wage rates are updated to reflect all rate changes in the collective bargaining agreement (CBA) governing

this classification and rate.

Survey Rate Identifiers

Classifications listed under the "SU" identifier indicate that no one rate prevailed for this classification in the survey and the published rate is derived by computing a weighted average rate based on all the rates reported in the survey for that classification. As this weighted average rate includes all rates reported in the survey, it may include both union and non-union rates. Example: SULA2012-007 5/13/2014. SU indicates the rates are survey rates based on a weighted average calculation of rates and are not majority rates. LA indicates the State of Louisiana. 2012 is the year of survey on which these classifications and rates are based. The next number, 007 in the example, is an internal number used in producing the wage determination. 5/13/2014 indicates the survey completion date for the classifications and rates under that identifier.

Survey wage rates are not updated and remain in effect until a new survey is conducted.

Union Average Rate Identifiers

Classification(s) listed under the UAVG identifier indicate that no single majority rate prevailed for those classifications; however, 100% of the data reported for the classifications was union data. EXAMPLE: UAVG-OH-0010 08/29/2014. UAVG indicates that the rate is a weighted union average rate. OH indicates the state. The next number, 0010 in the example, is an internal number used in producing the wage determination. 08/29/2014 indicates the survey completion date for the classifications and rates under that identifier.

A UAVG rate will be updated once a year, usually in January of each year, to reflect a weighted average of the current negotiated/CBA rate of the union locals from which the rate is based.

WAGE DETERMINATION APPEALS PROCESS

1.) Has there been an initial decision in the matter? This can be:

* an existing published wage determination
* a survey underlying a wage determination
* a Wage and Hour Division letter setting forth a position on a wage determination matter
* a conformance (additional classification and rate) ruling

On survey related matters, initial contact, including requests for summaries of surveys, should be with the Wage and Hour Regional Office for the area in which the survey was conducted

because those Regional Offices have responsibility for the Davis-Bacon survey program. If the response from this initial contact is not satisfactory, then the process described in 2.) and 3.) should be followed.

With regard to any other matter not yet ripe for the formal process described here, initial contact should be with the Branch of Construction Wage Determinations. Write to:

Branch of Construction Wage Determinations
Wage and Hour Division
U.S. Department of Labor
200 Constitution Avenue, N.W.
Washington, DC 20210

2.) If the answer to the question in 1.) is yes, then an interested party (those affected by the action) can request review and reconsideration from the Wage and Hour Administrator (See 29 CFR Part 1.8 and 29 CFR Part 7). Write to:

Wage and Hour Administrator
U.S. Department of Labor
200 Constitution Avenue, N.W.
Washington, DC 20210

The request should be accompanied by a full statement of the interested party's position and by any information (wage payment data, project description, area practice material, etc.) that the requestor considers relevant to the issue.

3.) If the decision of the Administrator is not favorable, an interested party may appeal directly to the Administrative Review Board (formerly the Wage Appeals Board). Write to:

Administrative Review Board
U.S. Department of Labor
200 Constitution Avenue, N.W.
Washington, DC 20210

4.) All decisions by the Administrative Review Board are final.

==========

END OF GENERAL DECISION

PROJECT LABOR AGREEMENT

NO STRIKE, NO LOCKOUT

PUBLIC SECTOR

CITY OF DULUTH

&

Vendor

Project name

Project No.

Template

INDEX	
AGREEMENT	1
ARTICLE I - PURPOSE	2
ARTICLE II - SCOPE OF THE AGREEMENT	2
ARTICLE III - UNION RECOGNITION AND REPRESENTATION	5
ARTICLE IV - LABOR HARMONY CLAUSE	5
ARTICLE V - WORK STOPPAGES AND LOCKOUTS	6
ARTICLE VI - DISPUTES AND GRIEVANCES	6
ARTICLE VII - JURISDICTIONAL DISPUTES	7
ARTICLE VIII - NO DISCRIMINATION	7
ARTICLE IX - SAVINGS AND SEPARABILITY	8
ARTICLE X - DURATION OF THE AGREEMENT	8
SCHEDULE “A”	11

Template

AGREEMENT

This Project Labor Agreement (hereinafter, the "Agreement"), effective as of the date of attestation by the City Clerk, by and between the various contractors engaged in the construction of facilities to be known as the (Project). The parties to this Agreement are the Building and Construction Trades Council, on behalf of its affiliated Local Unions (hereinafter "Union" or "Unions"), the City of Duluth (hereinafter "Owner") and Contractor (hereinafter "Construction Manager/General Manager," "Contractor," and "Contractors").

It is understood by the parties to this Agreement that it is the policy of the Owner that the construction work covered by this Agreement shall be contracted to Contractors who agree to be bound by the terms of this Agreement. Therefore, the Union agrees that other Contractors may execute the Agreement for the purpose of covering that work. The Construction Manager/General Contractor shall monitor compliance with this Agreement by all Contractors who through their execution of this Agreement, together with their subcontractors, have become bound hereto.

The term "Contractor" shall include all Contractors and subcontractors of whatever tier engaged in on-site construction work within the scope of this Agreement.

The Union and all signatory Contractors agree to abide by the terms and conditions contained in this Agreement with respect to the administration of the Agreement by the Owner and the performance of the construction by the Contractor of the Project. This Agreement represents the complete understanding of the parties, and it is further understood that no Contractor party is required to sign any other agreement as a condition of performing work within the scope of this Agreement. No practice, understanding or agreement between a Contractor and a Union party which is not explicitly set forth in this Agreement shall be binding on any other party unless endorsed in writing by the Project Contractor.

Template

ARTICLE I - PURPOSE

The (Project), an undertaking of the Owner, is a public project which will employ numbers of skilled and unskilled workers. Construction of the Project will entail utilization of the construction industry in an area having multiple labor contracts and employer associations. Consequently, conflicts within labor-management relations could cause delay or disruption of the efficient completion of the project unless maximum cooperation of all segments of the construction industry is obtained. This Agreement is to establish as the minimum standards on the Project the hours and working conditions as those prevailing for the largest number of workers engaged in the same classes of work within the area.

It is in the public interest that the Project progress and be completed in an expeditious and efficient manner, free of disruption or delay of any kind. Therefore, it is essential to secure optimum productivity and to eliminate any delays in the work. In recognition of the special needs of this Project and to maintain a spirit of harmony, labor-management peace and stability during the term of this Project Labor Agreement, the parties agree to establish effective and binding methods for the settlement of all misunderstandings, disputes or grievances which may arise. Therefore, the Unions agree not to engage in any strike, slowdown or interruption of work and the Contractor agrees not to engage in any lockout.

ARTICLE II - SCOPE OF THE AGREEMENT

Section 1. This Agreement, hereinafter designated as the "Project Labor Agreement" or "Agreement," shall apply and is limited to all construction work included in all Bid Categories for the (Project), under the direction of the signatory Contractors and performed by those Contractor(s) of whatever tier which have contracts awarded for such work on and after the effective date of this Agreement with regard to the Project.

Such Project is generally described as the construction of: Project

Template

Section 2. It is agreed that all direct subcontractors of a Contractor, of whatever tier, who have been awarded contracts for work covered by this Agreement on or after the effective date of this Agreement shall be required to accept and be bound by the terms and conditions of the Project Labor Agreement.

Section 3. The provisions of this Project Labor Agreement shall apply to all craft employees represented by any Union listed in Schedule A hereto attached and shall not apply to other field personnel or managerial or supervisory employees as defined by the National Labor Relations Act.

Section 4. All employees covered by this Agreement shall be classified in accordance with work performed and paid the base hourly wage rates for those classifications as specified in the attached Schedule A.

Section 5. The Contractors agree to pay contributions to the established employee benefit funds in the amounts designated in the appropriate Schedule A.

Contractors that are not signatory to a collective bargaining agreement beyond the scope of this Agreement ("PLA contractor") may select to participate in the legally established industry health reimbursement arrangement ("HRA") plan, in lieu of contributing to the respective bona fide benefit funds as designated in Schedule A. The amount of the contribution is based on the difference between the contribution amount of the bona fide Schedule A benefit funds and the cost of the PLA contractor's bona fide non-discretionary plans. Contributions must be made on behalf of named employees. Participating contractors will submit to the Trustees of the HRA trust and plan a copy of their plan, summary plan description, and the premium structure for workers covered under the PLA contractor's bona fide, non-discretionary plans. The value of the PLA contractor's benefit plans is subject to confirmation by the Trustees of the HRA trust and plan. This may include an independent audit according to a policy as established by the Trustees. Contractors are required to submit certified payroll reports to the Trustees or authorized administrator in order to confirm compliance with the terms of the HRA trust and plan.

Template

The Contractors adopt and agree to be bound by the written terms of the legally-established Trust Agreements (or in lieu thereof, the aforementioned HRA plan and trust including any policies) specifying the detailed basis on which payments are to be made into, and benefits paid out of, such Trust Funds. The Contractors authorize the parties to such Trust Agreements to appoint trustees and successor trustees to administer the Trust funds and hereby ratify and accept the Trustees so appointed as if made by the Contractors.

Section 6. In the event of any conflict between any provisions of this Agreement and in the Local Area Agreements, the terms of this Agreement will be applied. In other words, where a subject covered by the provisions of this Project Labor Agreement is also covered by the Local Area Agreement the provisions of this Project Labor Agreement shall prevail. Where a subject is covered by the Local Area Agreement and not covered by this Project Labor Agreement, the Local Area Agreement provisions shall prevail.

Section 7. This Agreement shall only be binding on the signatory parties hereto and shall not apply to the parents, affiliates, subsidiaries, or other ventures of any such party.

Section 8. This Agreement shall be limited to work historically recognized as construction work. Nothing contained herein shall be construed to prohibit, restrict, or interfere with the performance of any other operation, work or function which may occur in or around the Project site or be associated with the development of the Project, or with the ongoing operations of the Owner.

Section 9. It is understood that the liability of any Contractor and the liability of the separate Unions under this Agreement shall be several and not joint. The Union agrees that this Agreement does not have the effect of creating any joint employment status between or among Owner and any Contractor.

Template

Section 10. All workers delivering fill, sand, gravel, crushed rock, transit/concrete mix, asphalt or other similar materials and all workers removing any materials from the construction site as required by the specifications are subject to the provisions of the Minnesota state prevailing wage law and are entitled to the appropriate area standard wage. For purposes of this contract, such materials are for specified future use and per Minnesota state prevailing wage law delivery and pickup of the above-listed materials constitutes incorporation.

ARTICLE III - UNION RECOGNITION AND REPRESENTATION

Section 1. The Contractor recognizes the Union as the sole and exclusive bargaining representative of all craft employees working on facilities within the scope of this Agreement.

Section 2. Authorized representatives of the Union shall have access to the Project, provided they do not interfere with the work of employees and further provided that such representatives fully comply with the posted visitor and security and safety rules of the Project.

ARTICLE IV - LABOR HARMONY CLAUSE

The contractor shall furnish labor that can work in harmony with all other elements of labor employed on that (Project) and shall submit a labor harmony plan to demonstrate how this will be done. “Harmony” shall include the provision of labor that will not, either directly or indirectly, cause or give rise to any work disruptions, slow downs, picketing, stoppages, or any violence or harm to any person or property while performing any work, or activities incidental thereto at the (project). The labor harmony plan should include the company's labor management policies, collective bargaining agreements if any and their expiration dates, past labor relations history, a listing of activities anticipated under this contract that may potentially cause friction with on-site workers, and procedures the company will undertake to eliminate this friction.

The contractor agrees that it shall require every lower-tier subcontractor to provide labor that will work in harmony with all other elements of labor employed in the work, and will include the

Template

provisions contained in the paragraph above, in every lower-tier subcontract let for work under this contract.

The requirement to provide labor that can work in harmony with all other elements of labor employed in the work throughout the contract performance is a material element of this contract. Failure by the contractor or any of its lower tier subcontractors to comply with this requirement shall be deemed a material breach of the contract which will subject the contractor to all rights and remedies the city of Duluth may have, including without limitation the right to terminate the contract.

ARTICLE V - WORK STOPPAGES AND LOCKOUTS

Section 1. There shall be no strike, picketing, work stoppages, slowdowns or other disruptive, activity for any reason by the Union or employees against any Contractor covered under this Agreement, and there shall be no lockout by the Contractor. Failure of any Union or employee to cross any picket line established by any union, signatory or non-signatory, or any other organization, at or in proximity to the Project site is a violation of this Article.

Section 2. Any party alleging a breach of Section 1, of Article IV shall have the right to petition a court for temporary and permanent injunctive relief. The moving party need not show the existence of irreparable harm, and shall be required to post bond only to secure payment of court costs and attorney fees as may be awarded by the court.

ARTICLE VI - DISPUTES AND GRIEVANCES

Section 1. This Agreement is intended to provide close cooperation between management and labor. The Construction Manager/General Contractor and the Building and Construction Trades Council shall each assign a representative to this Project for the purpose of assisting the Local Unions, together with the Contractor, to complete the construction of the Project economically, efficiently, continuously and without interruption, delays or work stoppages.

Template

Each Contractor shall hold a pre-job conference with the Union and Construction Manager/General Contractor to clear up any project question and work assignments in which there is thought to be a difference in opinion. Every effort will be made to hold such conference well in advance of actual work performance.

Section 2. The Contractor, Union, and employees collectively and individually, realize the importance to all parties to maintain continuous and uninterrupted performance of the work of the Project, and agree to resolve disputes over grievances in accordance with the arbitration provisions set forth in the Local Area Agreements in effect with the Unions listed in Schedule A attached hereto.

ARTICLE VII - JURISDICTIONAL DISPUTES

Section 1. There will be no strikes, work stoppages, slowdowns, or other disruptive activity arising out of any jurisdictional dispute. Pending the resolution of the dispute, the work shall continue uninterrupted as assigned by the Contractor.

Section 2. Building construction work shall be assigned by the Contractor in accordance with the procedural rules of the Plan for the Settlement of Jurisdictional Disputes in the Construction Industry (hereinafter the "Plan"). Any jurisdictional dispute over the Contractor's assignment of work shall be settled in accordance with the provisions of the Plan.

Section 3. Where a jurisdictional dispute involves the International Brotherhood of Teamsters, it shall be referred for resolution to that International Union and the disputing International Union. The resolution of the dispute shall be reduced to writing, signed by the authorized representative of the International Unions and the Contractor. The assignments made by the Contractor shall be followed until such time as the dispute is resolved in accordance with this Section.

Template

ARTICLE VIII - NO DISCRIMINATION

Section 1. The Contractor and Union agree that they will not discriminate against any employee or applicant for employment because of his or her membership or nonmembership in a Union or based upon race, color, religion, sex, national origin or age in any manner prohibited by law or regulation.

Section 2. Any complaints regarding application of the provisions of Section 1 should be brought to the immediate attention of the involved Contractor for consideration and resolution.

Section 3. The use of the masculine or feminine gender in this Agreement shall be construed as including both genders.

ARTICLE IX - SAVINGS AND SEPARABILITY

It is not the intention of the parties to violate any laws governing the subject matter of this Agreement. The parties hereto agree that in the event any provisions of the Agreement are finally held determined to be illegal or void as being in contravention of any applicable law, the remainder of the Agreement shall remain in full force and effect unless the part or parts so found to be void are wholly inseparable from the remaining portions of this Agreement. Further, the contractor and Union agree that if and when any and all provisions of this Agreement are finally held or determined to be illegal or void by Court of competent jurisdiction, the parties will promptly enter into negotiations concerning the substance affected by such decision for the purpose of achieving conformity with the requirements of an applicable law and the intent of the parties hereto.

ARTICLE X - DURATION OF THE AGREEMENT

The Project Labor Agreement shall be effective as of the date of attestation by the City Clerk, and shall continue in effect for the duration of the Project construction work described in Article

Template

II hereof. Construction of any phase, portion, section or segment of the project shall be deemed complete when such phase, portion, section or segment has been turned over to the Owner and has received the final acceptance from the Owner's representative.

Since there are provisions herein for no strikes or lockouts in the event any changes are negotiated and implemented under a Local Area Agreement during the term of this Agreement, the Contractor agrees that, except as specified herein, such changes shall be recognized and shall apply retroactively to the termination date in the particular Local Agreement involved. Each Contractor which has a Local Agreement with a Union at the time that its contract at the project commences shall continue it in effect with each said Union so long as the Contractor remains on the project. In the event any such Local Area Agreement expires, the Contractor shall abide by all of the terms of the expired Local Agreement until agreement is reached on a new Local Agreement, with any changes being subject to the provisions of this Agreement.

The Union agrees that there will be no strikes, work stoppages, sympathy actions, picketing, slowdowns or other disruptive activity affecting the Project by any Union involved in the negotiation of a Local Area Agreement nor shall there be any lockout on this Project affecting the Union during the course of such negotiations.

Template

IN WITNESS WHEREOF, the parties have hereunto set their hands on the date of attestation shown below.

DULUTH BUILDING AND
CONSTRUCTION TRADES COUNCIL

By: _____

Its: _____
(Printed Name/Title)

Date: _____

VENDOR

By: _____

Its: _____
(Printed Name/Title)

Date: _____

Phone No.: _____

CITY OF DULUTH

By: _____
Mayor

Attest:

_____
City Clerk

Date: _____

_____
City Auditor

Date: _____

_____
Assistant City Attorney

Date: _____

Template

SCHEDULE "A"

A-1 Asbestos Workers Local 49
A-2 Boilermakers Local 647
A-3 BAC Local 1 Chapter 3 Duluth & Iron Range
A-4 Carpenters Local 361
A-5 Cements Masons/Plasterers Local 633
A-6 Elevator Constructors Local 9
A-7 Glaziers Local 106
A-8 IBEW Local 242
A-9 Iron Workers Local 512
A-10 Laborers Local 1091
A-11 Millwrights & Machinery Erectors Local 1348
A-12 Operating Engineers Local 49
A-13 Painters & Allied Trades Local 106
A-14 Plumbers & Steamfitters Local 11
A-15 Roofers Local 96
A-16 Sheet Metal Workers Local 10
A-17 Sprinkler Fitters Local 669
A-18 Teamsters Local 346

Template

Building Trades Affiliates

Contract Expirations

Heat & Frost Insulators Local 49	May 31, 2017
Boilermakers Local 647	December 31, 2017
Bricklayers Local 1	April 30, 2018
Carpenters Local 361	April 30, 2017
Cement Masons Local 633	April 30, 2017
Elevator Constructors Local 9	July 8, 2017
Glaziers Local 106	April 30, 2017
IBEW Local 242	May 31, 2019
Iron Workers Local 512	April 30, 2019
Laborers Local 1091	April 30, 2017
Millwright Local 1348	April 30, 2018
Operator Engineers Local 49 (Bldrs)	April 30 2019
Operator Engineers Local 49 (Hwy Heavy)	April 30, 2017
Painters Local 106	April 30, 2017
Plumbers & Steamfitters Local 11	April 30, 2017
Roofers Local 96	June 30, 2021
Sheet Metal Local 10	April 30, 2019
Sprinkler Fitters Local 669	March 31, 2021
Teamsters Local 346	April 30, 2017

(Updated 3/3/17)

Affiliated AFL-CIO

DULUTH BUILDING AND CONSTRUCTION TRADES COUNCIL

2002 LONDON ROAD | LABOR CENTER | DULUTH, MINN. 55812

Officers
Craig Olson
President
Darrell Godbout
Vice President
Dan Olson
Secretary
Jeff Daveau
Treasurer

Boilermakers #647
Bricklayers #1
Carpenters #361
Cement Masons #633
Elevator #9
IBEW #242
Insulators #49
Ironworkers #512
Laborers #1091
Millrights #1348
Operators #49
Painters #106
Pipefitters #11
Roofers #96
Sheetmetal #10
Sprinklerfitters #669
Teamsters #346

ASBESTOS WORKERS LOCAL 49
Dave Cartwright
2002 London Road #210
Duluth, MN 55812
(218) 724-3223 / Fax# 724-1870
dave@insulatorslocal49.org

BOILERMAKERS LOCAL 647
Bill Polchow
1007 NW 4th Street, Ste C
Grand Rapids, MN 55744
(218) 326-2522 / Fax# SAME
bpolchow647@outlook.com

BAC LOCAL #1 CHAPTER 3 DULUTH & IRON RANGE
Stan (Ogie) Paczynski
2002 London Road #100
Duluth, MN 55812
(218) 724-8374 / Fax# 724-8341
spaczynski@bac1mn-nd.org

CARPENTERS LOCAL 361
Chris Hill
5238 Miller Trunk Hwy
Hermantown, MN 55811
(218) 724-3297 / Fax# 724-8536
chill@ncsrcc.org

CEMENT MASONS LOCAL 633
Michael Syversrud
2002 London Road #112
Duluth, MN 55812
(218) 724-2323 / Fax# 724-2472
mikes@local633.org

ELEVATOR CONSTRUCTORS LOCAL 9
Dave Aaserud
433 Little Canada Rd E
Little Canada, MN 55117
(651) 287-0817 / Fax# 287-0820
d.aaserud@local9.com

IBEW LOCAL 242
Don Smith
2002 London Road #111
Duluth, MN 55812
(218) 728-6895 / Fax# 728-1965
dsmithlcl242@unions-america.com

IRON WORKERS LOCAL 512
Darrell Godbout, ***Vice President***
3752 Midway Road
Hermantown, MN 55810
(218) 724-5073 / Fax# 724-1525
darrell@iron512.com

LABORERS LOCAL 1091
Dan Olson, ***Secretary***
2002 London Road #119
Duluth, MN 55812
(218) 728-5151 / Fax# 728-2431
laborers@local1091.com

MILLRIGHTS & MACHINERY ERECTORS LOCAL 1348
Wayne Nordin
726 4th Street N
Virginia, MN 55792
(218) 741-6314 / Fax# 741-6017
wnordin@ncsrcc.org

OPERATING ENGINEERS LOCAL 49
Eric Gulland & Mike Parrott
2002 London Road #116
Duluth, MN 55812
(218) 724-3840 / Fax# 728-1441
edgulland@local49.org
mwparrott@local49.org

PAINTERS LOCAL 106
Craig Olson, ***President***
2002 London Road #106
Duluth, MN 55812
(218) 724-6466 / Fax# 724-7359
president@duluthbuildingtrades.com

PLUMBERS & FITTERS LOCAL 11
Jeff Daveau, ***Treasurer***
4402 Airpark Boulevard
Duluth, MN 55811
(218) 727-2199 / Fax# 727-2298
jeff@ualocal11.com

ROOFERS LOCAL 96
Vance Anderson
1145 Villa Vista Circle
Cromwell MN 55726
(218) 644-1096 / Fax# SAME
valocal96@yahoo.com

SHEET METAL WORKERS LOCAL 10
Doug Christy
6279 Industrial Road
Saginaw, MN 55779
(218) 724-6873 / Fax# SAME
dchristy@smw10.org

SPRINKLER FITTERS LOCAL 669
James Westby
PO Box 398
Mabel, MN 55954
(507) 493-5671 / Fax# 493-5481
westby@mabeltel.coop

TEAMSTERS LOCAL 346
Rod Alstead
2802 West 1st Street
Duluth, MN 55806
(218) 628-1034 / Fax# 628-0246
local@teamsters346.com

INTERNATIONAL ASSOCIATION OF

Heat & Frost Insulators & Allied Workers

Local 49

2002 London Road
Duluth, MN 55812

Tel: 218-724-3223
Fax: 218-724-1870
Cell: 218-590-0374

May 28, 2016

To whom it may concern,

The allocation of the wage increase effective June 1st 2016 is as follows:

	Mechanic	4th Year	3rd Year	2nd Year	1st Year
Base Wage	$28.77	$21.83	$19.13	$16.49	$13.79
Savings	$8.00	$6.00	$4.76	$3.50	$2.26
Union Dues	$3.54	$2.83	$2.48	$2.12	$1.77
Health & Welfare	$7.20	$7.20	$7.20	$7.20	$7.20
Pension	$9.00	$7.20	$5.76	$4.30	$2.86
Local Training	$0.50	$0.50	$0.50	$0.50	$0.50
Nat'l Training	$0.05	$0.05	$0.05	$0.05	$0.05
Industry Fund	$0.15	$0.15	$0.15	$0.15	$0.15
LMCT	$0.05	$0.05	$0.05	$0.05	$0.05
Total	**$57.26**	**$45.81**	**$40.08**	**$34.36**	**$28.63**
Total Taxable	*$40.31*	*$30.66*	*$26.37*	*$22.11*	*$17.82*

Please feel free to call the Local office with questions or concerns.

Sincerely,

David Cartwright
Business Manager

Affiliated with the AFL-CIO, Building and Construction Trades Department, Metal Trades Department and Canadian Labour Congress

PRINTED IN U.S.A.

International Brotherhood of

BOILERMAKERS · IRON SHIP BUILDERS

9459 N.W. Highway 10, Suite 105
Ramsey, MN 55303-7280
S 3

Local Lodge No. 647

BLACKSMITHS · FORGERS & HELPERS

Luke A. Voigt
Business Manager/Secretary Treasurer
763-712-9930 . Fax: 763-712-9935

November 22, 2016

TO WHOM IT MAY CONCERN:

The following wage package changes listed below become effective 01/01/2017 thru 12/31/2017 for Boilermakers Local Lodge #647. Per the Great Lakes Articles of Agreement for the year of 2017, there is a $1.35 increase which has been allocated to the wages. Also, the rate for General Foreman and Foreman increased $.50 per hour.

CHANGES AS OF:	January 1, 2017
Increase General Foreman	$ 1.85
Increase Foreman	1.85
Increase Journeyman	1.35

Effective:	01/01/2017
General Foreman Wage	$ 41.50
Foreman Wage	39.50
Journeyman Wage	36.50
Pension Trust	14.14
Annuity Trust	4.40
Health & Welfare Fund	7.07
Retiree Welfare Plan	.50
Apprenticeship Fund	.40
MOST	.34
647 D&T	.51
Deductions (after tax)	
Vacation Trust	2.00
647 Political Action Fund	.05

All other benefits and deductions remain the same for the Great Lakes Articles of Agreement as listed further in this letter.

Subsistence will be paid under the terms and conditions of the Great Lakes Articles of Agreement. For the provisions of the agreement on subsistence, Addendum A of the agreement states effective 01/01/2017 thru 12/31/2017 the daily rate of Subsistence is $65.00 per day if a Boilermaker's permanent address is 50 miles from the jobsite.

Addendum B was created and instilled in the Great Lakes Area Articles of Agreement. This addendum is in force from March 1, 2017 thru May 31, 2017 in the states of North Dakota and South Dakota and needs to be renewed each year thereafter. The addendum outlines a $2.00 hourly wage increase for certified pressure (tube) welding Journeymen Boilermakers and certified pressure (tube) welding

Apprentices shall receive Journeyman rate during this timeframe while working in the jurisdiction outlined above. Addendum B will be provided upon request, please contact Local 647 for a copy.

Boilermaker-Blacksmith National Pension Trust ($14.14), National Annuity ($4.40), National Health & Welfare Fund ($7.07), Boilermakers Great Lakes Region Retiree Welfare Plan ($.50), Boilermakers 647 D&T Fund ($.51), and Boilermakers 647 Political Action Fund ($.05 deducted after taxes) are to be paid on hours PAID, not hours worked.

Vacation Trust ($2.00 deducted after taxes), Apprenticeship Fund ($.40) and MOST ($.34) are to be paid on hours WORKED.

647 Political Action Fund and 647 D&T Fund monies will be submitted to Local 647 on separate forms and will require separate checks for each fund.

Boilermakers receive time and one-half over the established workday of eight hours and all time worked on Saturdays. All time worked on Sundays and holidays are double time.

Effective November 1, 2011, Field Dues increased to 4.25% of the gross pay, which is remitted to Local 647.

An Emergency Work Addendum has been added to the Great Lakes Articles of Agreement which provides for time and one half rate of pay for unscheduled emergency outages. If you would like a copy of this addendum please contact Local 647.

This is the first year of our three year agreement. In 2018 there will be a $1.35 increase and in 2019 there will be a $1.40 increase, both yet to be allocated.

If you have any questions please call me at 763-712-9930.

Very truly yours,

Luke A. Voigt
Business Manager/Secretary Treasurer
Boilermakers Local Lodge #647

LAV/vm
opeiu #12

Bricklayers and Allied Craftworkers

Local Union 1 Minnesota / North Dakota

312 Central Avenue, Suite 328
Minneapolis, Minnesota 55414

"Building For the Future"

TELEPHONE: 612/379-2966
FAX: 612/379-8754

MICHAEL J COOK
President/Secretary-Treasurer

To: All Associated General Contractors
Minnesota Masonry Contractors
Independent Contractors
Chapter #3
Duluth Area

May 6, 2016

Scope of the Agreement
This agreement shall cover all of the part of St. Louis County, south of a line between townships 54 and 55 (two miles north of Cotton), also the eastern half of Aitkin County on a line with the northeast boundary line of Mille Lacs County, also Carlton, Lake, Cook, Pine and Kanabec.

BRICKLAYERS AND ALLIED CRAFTWORKERS
LOCAL UNION 1 MINNESOTA / NORTH DAKOTA
DULUTH AREA – BRICKLAYERS, BLOCKLAYERS AND P.C.C.'S

This is to advise you that the new working agreement calls for a $1.90 increase per hour with rates retroactive to May 1, 2016. Please inform your bookkeeping department of the following rates.

The total wage rate effective May 1, 2016 for members of the Bricklayers and Allied Craftworkers will be as follows:

WAGES	HEALTH $BANK – RPP	HRA	IU & PPA PENSION	LOCAL PENSION	DUL ANN	DUL VAC	DUES	IMI	APPR	FCF	TOTAL
29.64	(6.96 + 1.10)	.88	(1.50 + .52)	7.15	3.85	2.00	1.27	.56	.30	.02	55.75

Base Rate:	$29.64
Vacation, Dues Check Off:	$3.27
Taxable Amount:	$32.91

FOREMAN RATE - The **NEW** Foreman rate shall be an additional **$3.50** above the scale.
REFRACTORY - The Refractory Base Wage rate shall be $31.14 with above fringe benefits.
VACATION PAY - Vacation Pay shall be pyramided in all overtime pay. Time and one-half = $3.00
Double-time =$4.00

Sincerely,
Michael J Cook

Michael J. Cook
President / Secretary - Treasurer
Bricklayers and Allied Craftworkers
Local Union 1Minnesota / North Dakota
8 – 2016

APPRENTICE WAGES

BASE WAGE	TAXABLE
0 - 1999 hours 65% - $19.27	$22.54*
2000 - 3999 hours 75% - $22.23	$22.50*
4000 - 5999 hours 85% - $25.19	$28.46*
6000 hours full wages & fringe benefits *	

Taxable wage - Includes Vacation and Dues

Bricklayers and Allied Craftworkers

Local Union 1 Minnesota / North Dakota

312 Central Avenue, Suite 328
Minneapolis, Minnesota 55414

"Building For the Future"

TELEPHONE: 612/379-2966
FAX: 612/379-8754

MICHAEL J. COOK
President/Secretary-Treasurer

To: All Associated General Contractors
Minnesota Tile Contractors
Independent Contractors
Chapter #3
Duluth Area

Scope of the Agreement
This agreement shall cover the counties of St. Louis, Koochiching, Itasca, Aitkin, Carlton, Lake, and Cook. The agreement shall also cover all of the part of Pine County north of County Road 30 and include the city of Sandstone.

April 29, 2016

BRICKLAYERS AND ALLIED CRAFTWORKERS
LOCAL UNION 1 MINNESOTA / NORTH DAKOTA

DULUTH AREA –TILE LAYERS

This is to advise you that the new working agreement calls for a $1.40 increase per hour on May 1, 2016. Please inform your bookkeeping department of the following rates.

The total wage rate effective May 1, 2016 for members of the Bricklayers and Allied Craftworkers will be as follows:

WAGES	HEALTH $BANK – RPP	HRA	IU & PPA PENSION	LOCAL PENSION	LOCAL ANNUITY	VAC.	DUES	IMI	APPR	FCF	TOTAL
23.32	(5.65 + 1.10)	1.21	(1.50 + .52)	7.15	4.72	.50	1.09	.47	.20	.02	47.45

Base Rate: $23.32
Vacation, Dues Check Off: $1.59
Taxable Amount: $24.91

Foreman shall receive an additional $1.00 above the scale.

APPRENTICESHIP WAGES

	BASE WAGE	TAXABLE
0 – 1999 hours	90% - $20.99	$22.58 *
2000 - 3999 hours	95% - $22.15	$23.74 *

4000 hours full wage & fringe benefits

* Taxable wage = Includes Dues*

Sincerely,

Michael J. Cook

Michael J. Cook
President / Secretary - Treasurer
Bricklayers and Allied Craftworkers
Local Union 1 Minnesota / North Dakota

46-2016

Bricklayers and Allied Craftworkers

Local Union 1 Minnesota / North Dakota

312 Central Avenue, Suite 328
Minneapolis, Minnesota 55414

"Building For the Future"

TELEPHONE: 612/379-2966
FAX: 612/379-8754

MICHAEL J. COOK
President/Secretary-Treasurer

To: All Associated General Contractors
Minnesota Tile Contractors
Independent Contractors
Chapter #3
Duluth Area

Scope of the Agreement
This agreement shall cover the counties of St. Louis, Koochiching, Itasca, Aitkin, Carlton, Lake, and Cook. The agreement shall also cover all of the part of Pine County north of County Road 30 and include the city of Sandstone.

April 29, 2016

BRICKLAYERS AND ALLIED CRAFTWORKERS
LOCAL UNION 1 MINNESOTA / NORTH DAKOTA
DULUTH AREA - TILE FINISHERS

This is to advise you that the new working agreement calls for a $1.40 increase per hour on May 1, 2016. Please inform your bookkeeping department of the following rates.

The total wage rate effective May 1, 2016 for members of the Bricklayers and Allied Craftworkers will be as follows:

WAGES	HEALTH $BANK - RPP	HRA	IU & PPA PENSION	LOCAL PENSION	LOCAL ANNUITY	VAC.	DUES	IMI	APPR	FCF	TOTAL
16.54	(5.65 + 1.10)	1.00	(1.50 + .52)	7.15	.54	.50	.87	.36	.20	.02	35.95

Base Rate:	$16.54
Vacation, Dues Check Off:	$1.37
Taxable Amount:	$17.91

APPRENTICESHIP WAGES

	BASE WAGE	TAXABLE
0 - 999 hours	70% - $11.58	$12.95*
1000 – 1999 hours	75% - $12.41	$13.78*
2000 -2999 hours	80% - $13.23	$14.60*
3000 - 3999 hours	85% - $14.07	$15.43*
4000 hours full wage & fringe benefits		

* Taxable wage = Includes Dues*

Sincerely,

Michael J. Cook

Michael J. Cook
President / Secretary - Treasurer
Bricklayers and Allied Craftworkers
Local Union 1 Minnesota / North Dakota

47-2016

Northern Minnesota

Local 361

Commercial Carpenter Wage Rates

Effective May 1, 2016

Classification		Percent (%)	Gross Wages	Deductions: Savings	Deductions: Dues	Fringe Benefits: Health	Fringe Benefits: DB Pension	Fringe Benefits: DC Pension	Fringe Benefits: Apprentice/ Education	Fringe Benefits: Fair Contracting	Total Package
Commercial Foreman (+2.00 Above JP)		100%	$31.97	-$1.30	-$1.20	$6.81	$6.60	$3.00	$0.55	$0.02	$48.95
Commercial Journeyperson		100%	$29.97	-$1.30	-$1.20	$6.81	$6.60	$3.00	$0.55	$0.02	$46.95
Apprentice	6125-7000	97%	$29.07	-$1.30	-$0.90	$6.81	$6.60	$3.00	$0.55	$0.02	$46.05
	5250-6125	93%	$27.87	-$1.30	-$0.90	$6.81	$6.60	$3.00	$0.55	$0.02	$44.85
	4375-5250	88%	$26.37	-$1.30	-$0.90	$6.81	$6.60	$3.00	$0.55	$0.02	$43.35
	3500-4375	83%	$24.88	-$1.30	-$0.90	$6.81	$6.60	$3.00	$0.55	$0.02	$41.86
	2625-3500	78%	$23.38	-$1.30	-$0.90	$6.81	$6.60	$3.00	$0.55	$0.02	$40.36
	1750-2625	73%	$21.88	-$1.30	-$0.90	$6.81	$6.60	$3.00	$0.55	$0.02	$38.86
	875-1750	68%	$20.38	-$1.30	-$0.90	$6.81	$6.60	$3.00	$0.55	$0.02	$37.36
	0-875	63%	$18.88	-$1.30	-$0.90	$6.81	$6.60	$3.00	$0.55	$0.02	$35.86

Consisting of Carlton, Cook, Pine, and portions of Lake and St. Louis Counties in Minnesota and Douglas and Western Bayfield Counties in Wisconsin.

CEMENT MASONS, PLASTERERS AND SHOPHANDS
Local No. 633

of Minnesota, North Dakota, and NW Wisconsin · AFL-CIO

312 Central Avenue · Room 376 · Minneapolis, Minnesota 55414

Phone (612)379-1558 · Fax (612)379-1559

GREG MASSEY
Financial Secretary Business Manager

DAVE SCHUTTA
President

JOSEPH DeRASMI
Business Agent

BRIAN GULLICKSON
Business Agent

GREG JOHNSON
Business Agent

JEROME JOHNSON
Business Agent

MICHAEL KRAHN
Business Agen

DARRELL LENDE
Business Agent

MICHAEL SYVERSRUD
Business Agent

THOMAS REGER
Apprentice Coordinator

TO: ALL DULUTH AREA CONTRACTORS

ATTN: PAYROLL DEPT

RE: 2016 WAGE RATES - **BUILDERS** DIVISION

This Agreement shall govern work done in the areas defined as follows: All of the following counties: Aitkin, Carlton, Cook, Lake and that part of Pine County north of the northern boundaries of Dell Grove, Sandstone and Danforth townships, and that part of St. Louis County south of Co Rd 967 which is two miles north of cotton on Hwy #53, as well as the following counties in Wisconsin: Douglas, Bayfield, Washburn, Sawyer and Price.

EFFECTIVE MAY 1, 2016

BASIC WAGE*	HEALTH & WELFARE	HRA	PENSION	SAVINGS	TRAINING	TOTAL
30.86	7.48	1.25	7.94	(5.27)	.46	47.99

*The Basic Wage before the deduction of savings is the straight time wage used in determining overtime. (EXAMPLE: 1.5 X $30.86 = $46.29 TAXED, THEN MINUS $5.27 FOR SAVINGS EACH HOUR) After all taxes are deducted from the Basic Wage rate, $5.27 per hour for each hour worked shall be deducted and applied to the Minnesota Cement Masons Savings Plan.

Foreman: $2.00 above basic wage

APPRENTICE RATES:

UP TO 1000HRS	70%	21.60
1001-2000 HRS	75%	23.15
2001-3000 HRS	80%	24.69
3001-4000 HRS	85%	26.23
4001-5000 HRS	90%	27.77
5001-6000 HRS	95%	29.32

CEMENT MASONS, PLASTERERS AND SHOPHANDS
Local No. 633
of Minnesota, North Dakota, and NW Wisconsin · AFL-CIO
312 Central Avenue · Room 376 · Minneapolis, Minnesota 55414
Phone (612)379-1558 · Fax (612)379-1559

GREG MASSEY
Financial Secretary Business Manager

DAVE SCHUTTA
President

JOSEPH DeRASMI
Business Agent

BRIAN GULLICKSON
Business Agent

GREG JOHNSON
Business Agent

JEROME JOHNSON
Business Agent

MICHAEL KRAHN
Business Agen

DARRELL LENDE
Business Agent

MICHAEL SYVERSRUD
Business Agent

THOMAS REGER
Apprentice Coordinator

TO: ALL DULUTH AREA CONTRACTORS

ATTN: PAYROLL DEPT

RE: 2016 WAGE RATES - **HIGHWAY/HEAVY** DIVISION

This Agreement shall govern work done in the areas defined as follows: All of the following counties: Aitkin, Carlton, Cook, Lake and that part of Pine County north of T.24N, and that part of St. Louis County south of T.55N, as well as the following counties in Wisconsin: Ashland, Douglas, Bayfield, Burnett, Iron, Washburn, Sawyer and Price.

EFFECTIVE MAY 1, 2016

BASIC WAGE*	HEALTH & WELFARE	HRA	PENSION	SAVINGS	TRAINING	TOTAL
33.95	7.48	1.75	7.94	(5.67)	.46	51.58

*The Basic Wage before the deduction of savings is the straight time wage used in determining overtime. (EXAMPLE: 1.5 X $33.95 = $50.93, TAXED, THEN MINUS $5.67 FOR SAVINGS EACH HOUR) After all taxes are deducted from the Basic Wages, $5.67 per hour for each hour worked shall be deducted and applied to the Minnesota Cement Masons Savings Plan.

Foreman: $1.50 above basic wage

APPRENTICE RATES:

UP TO 1000HRS	70%	23.77
1001-2000 HRS	75%	25.46
2001-3000 HRS	80%	27.16
3001-4000 HRS	85%	28.86
4001-5000 HRS	90%	30.56
5001-6000 HRS	95%	32.25

CEMENT MASONS, PLASTERERS AND SHOPHANDS
Local No. 633
of Minnesota, North Dakota, and NW Wisconsin · AFL-CIO
312 Central Avenue · Room 376 · Minneapolis, Minnesota 55414
Phone (612)379-1558 · Fax (612)379-1559

GREG MASSEY
Financial Secretary Business Manager

DAVE SCHUTTA
President

JOSEPH DeRASMI
Business Agent

BRIAN GULLICKSON
Business Agent

GREG JOHNSON
Business Agent

JEROME JOHNSON
Business Agent

MICHAEL KRAHN
Business Agen

DARRELL LENDE
Business Agent

MICHAEL SYVERSRUD
Business Agent

THOMAS REGER
Apprentice Coordinator

TO: ALL NORTHERN MINNESOTA & NORTHWESTERN WISCONSIN **PLASTERING** CONTRACTORS

ATTN: PAYROLL DEPT, 2016 WAGE RATES

This Agreement shall govern work done in the areas defined as follows: All of the following counties: Aitkin, Carlton, Cook, Itasca, Lake, St. Louis, and that part of Pine County north of T.24N, as well as the following counties in Wisconsin: Ashland, Bayfield, Douglas, Iron, Sawyer, Washburn, Burnett, and Price.

EFFECTIVE MAY 1, 2016

BASIC WAGE*	HEALTH & WELFARE	HRA	PENSION	SAVINGS*	TRAINING	TOTAL
31.49	7.48	2.00	7.94	(3.60)	.46	49.37

*The Basic Wage before the deduction of savings is the straight time wage used in determining overtime. (EXAMPLE: 1.5 X $31.49 = $47.24 TAXED, THEN MINUS $3.60 FOR SAVINGS EACH HOUR). After all taxes are deducted from the Basic Wage rate, $3.60 per hour for each hour worked shall be deducted and applied to the Minnesota Cement Masons Savings Plan.

Foreman: $1.50 above basic wage

APPRENTICE RATES:

UP TO 1000HRS	70%	22.04
1001-2000 HRS	75%	23.62
2001-3000 HRS	80%	25.19
3001-4000 HRS	85%	26.77
4001-5000 HRS	90%	28.34
5001-6000 HRS	95%	29.92

INTERNATIONAL UNION OF ELEVATOR CONSTRUCTORS

LOCAL UNION NO. 9
433 Little Canada Road E.
Little Canada, MN 55117

AFFILIATED WITH THE AFL-CIO
Phone: (651) 287-0817
Fax: (651) 287-0820

Wage & Fringe Benefits: January 1, 2016

To: All Employers doing Business within the Jurisdiction of IUEC Local 9
Subject: Wage rates effective January 1, 2016 – IUEC Local 9
Minnesota, North Dakota and Western Wisconsin

In accordance with the provisions of Article V of the current labor agreement (2012-2017) between all signatory employers and the International Union of Elevator Constructors, the following rates shall be effective on January 1, 2016:

Mechanic in Charge	(112.5%)	$51.60
Mechanic	(100.0%)	$45.87
4th Year Apprentice	(80.0%)	$36.70
3rd Year Apprentice	(70.0%)	$32.11
2nd Year Apprentice	(65.0%)	$29.82
1st Year Apprentice	(55.0%)	$25.23
Probationary Apprentice	(50.0%)	$22.935
Helper	(70.0%)	$32.11

The company will make fringe benefit contributions per hour worked in accordance with the following schedule:

Health Benefit Plan	$14.425
Pension	$ 8.96
Annuity	$ 6.00
Education	$ 0.60
Elevator Ind. Work Preservation Fund	$ 0.30
TOTAL	$30.285

Vacation: 6% Hourly pay under 5 years
8% Hourly pay over 5 years

Local 106 Glaziers Wage Rates
Effective May 2, 2016

Journeyperson Wage Rates:

	Base	Health & Welfare	Pension	Annuity	FTI/UM	FTI/NT'L	FCF	LMCI	STAR	DC82/FCF	**Total**	Vac *	Check-off Dues**
Glaziers	$30.17	$7.20	$5.92	$3.90	$0.35	$0.10	$0.01	$0.10	$ 0.10	$0.01	$47.86	$2.55	$1.88
Auto Glass	$24.24	$7.20	$5.92	$3.90	$0.35	$0.10	$0.01	$0.10	$ 0.10	$0.01	$41.93	$2.55	$1.67

Apprentices Indentured BEFORE May 1, 2014:

Hours	**%**	Base	Health & Welfare	Pension	Annuity	FTI/UM	FTI/NT'L	FCF	LMCI	STAR	DC82/FCF	**Total**	Vac *	Check-off Dues**
0-1000	50	$15.09	$7.20	$5.92	$3.90	$0.35	$0.10	$0.01	$0.10	$ 0.10	$0.01	$32.78	$1.28	$1.35
1001-2000	55	$16.59	$7.20	$5.92	$3.90	$0.35	$0.10	$0.01	$0.10	$ 0.10	$0.01	$34.28	$1.40	$1.40
2001-3000	60	$18.10	$7.20	$5.92	$3.90	$0.35	$0.10	$0.01	$0.10	$ 0.10	$0.01	$35.79	$1.53	$1.45
3001-4000	70	$21.12	$7.20	$5.92	$3.90	$0.35	$0.10	$0.01	$0.10	$ 0.10	$0.01	$38.81	$1.79	$1.56
4001-5000	80	$24.14	$7.20	$5.92	$3.90	$0.35	$0.10	$0.01	$0.10	$ 0.10	$0.01	$41.83	$2.04	$1.66
5001-6000	90	$27.15	$7.20	$5.92	$3.90	$0.35	$0.10	$0.01	$0.10	$ 0.10	$0.01	$44.84	$2.30	$1.77

Apprentices Indentured on or AFTER May 1, 2014:

Hours	**%**	Base	Health & Welfare	Pension	Annuity	FTI/UM	FTI/NT'L	FCF	LMCI	STAR	DC82/FCF	**Total**	Vac *	Check-off Dues**
0-1000	50	$15.09	$7.20	$5.92	$1.95	$0.35	$0.10	$0.01	$0.10	$ 0.10	$0.01	$30.83	$1.28	$1.28
1001-2000	55	$16.59	$7.20	$5.92	$2.15	$0.35	$0.10	$0.01	$0.10	$ 0.10	$0.01	$32.53	$1.40	$1.34
2001-3000	60	$18.10	$7.20	$5.92	$2.34	$0.35	$0.10	$0.01	$0.10	$ 0.10	$0.01	$34.23	$1.53	$1.40
3001-4000	70	$21.12	$7.20	$5.92	$2.73	$0.35	$0.10	$0.01	$0.10	$ 0.10	$0.01	$37.64	$1.79	$1.52
4001-5000	80	$24.14	$7.20	$5.92	$3.12	$0.35	$0.10	$0.01	$0.10	$ 0.10	$0.01	$41.05	$2.04	$1.64
5001-6000	90	$27.15	$7.20	$5.92	$3.51	$0.35	$0.10	$0.01	$0.10	$ 0.10	$0.01	$44.45	$2.30	$1.76

*The Vacation Contribution is included in the taxable wage listed above, then deducted and remitted along with your Health & Welfare Contribution.

Revised 5/18/16					
LOCAL UNION #242					
Effective Dates	**05/31/15**		**05/29/16**		
JW Rate	**$33.90**		**$34.92**		
Foreman	**12.5%**		**12.5%**		
General Foreman	**22.5%**		**22.5%**		
NEBF	3.00%	$1.02	3.00%	$1.05	
Vacation	11.00%	$3.73	11.00%	$3.84	
H & W	27.64%	$9.37	27.21%	$9.50	
Local Pension	13.55%	$4.59	13.55%	$4.73	
Annuity	16.00%	$5.42	16.00%	$5.59	
****Total Package**	**$58.05**		**$59.65**		
LLMCC Employee .02	$58.03		$59.63		
Total Package %	**71.19%**		**70.76%**		

Total Package 2017 = $61.20 less Employee LLMCC (.02) $61.18

Total Package 2018 = $62.70 less Employee LLMCC (.02) $62.68

****These total packages do not include Apprenticeship (1%), NECA Service Charges (1.25%), Admin. Maint. Fund (.006%/hr.), NLMCC (.01 cent/hr.), or LLMCC (.04 cents/hr.).**

Apprenticeship	1% .34		1% / .35		
Service Charge	1.25% .42		1.25% / .44		
NLMCC	0.01		0.01		
Local LMCC	0.04		0.04		
Admin Maint Fund	0.20		0.21		
	1.01		**1.05**		

401k deduction - $1.00, $3.00 & $5.00 per hour (at employees discretion)

Subsistance for all jobs outside of 35 mile radius of Lake Ave & Superior Street in Duluth - $15.00

Subsistance for all jobs outside of 70 mile radius of Lake Ave & Superior Street in Duluth - $50.00

DULUTH APPRENTICE WAGE RATE INFORMATION

6th	6,500 - 8,000	85%	$29.68	Full Benefits - 5th year
5th	5,000 - 6,500	75%	$26.19	Full Benefits - 4th year
4th	3,500 - 5,000	65%	$22.70	Full Benefits - 3rd year
3rd	2,000 - 3,500	55%	$19.21	Full Benefits - 2nd year
2ND	1,000 - 2,000	50%	$17.46	H&W/NEBF - 1st year
1st	0 - 1,000	45%	$15.71	H&W/NEBF -

IRON WORKERS LOCAL UNION NO. 512 REGIONAL WAGE/FRINGE SCHEDULE

Region A

Effective June 5, 2016

Base Wage Rate	Defined Benefit Pension	Defined Contribution Pension	Health & Welfare	Apprenticeship & Training Fund	IMPACT Fund	Fair Contracting Foundation	Total Package	Voluntary CAF
$36.00	$9.75	$6.00	$8.20	$0.95	$0.27	$0.02	$61.19	$0.04

$54.00	Journeyman time and one-half rate
$72.00	Journeyman double time rate

Leadman (two employees or less)	$1.00	per hour above Base Wage Rate.
Foreman (three employees or more)	$2.50	per hour above Base Wage Rate.
General Foreman	$4.00	per hour above Base Wage Rate.

Savings Plan Deduction ($3.25 per hour)
The Employer is required to deduct $3.25 per hour worked from the Employee's after-tax wages as the Savings Plan Deduction; calculated on an hours-worked basis and does not pyramid with overtime rates of pay.

Working Dues Check-Off Deduction
The Employer is required deduct from the Employee's after-tax wages, the amount equal to **5%** of the Employee's gross wages as a working dues check-off deduction. This deduction shall not apply to per diem, subsistence, mileage or bonus payments made to the employee.

Organizing Dues Check-Off Deduction
The Employer is required to deduct $0.10 per hour worked from the Employee's after-tax wages as an organizing dues check-off deduction, calculated on an hours-worked basis and does not pyramid with overtime rates of pay.

Fair Contracting Foundation (FCF)
Included in the Total Package amount is a contribution of $0.02 per hour worked, effective in all Regions of the Union. This contribution is to be reported as a separate line item and remitted to Twin City Iron Workers Fringe Benefit Funds with the other contributions and will be forwarded to FCF appropriately.

****Contract Administration Fund (C.A.F.)**
Not included in the Total Package amount is a voluntary Employer contribution of $0.04 per hour worked for the Contract Administration Fund.

When and Where to Send Contributions and Deductions
All fringe benefit fund contributions and payroll deductions are due no later than the 20th day of the month following the month when the hours were worked and should be remitted to:

Twin City Iron Workers Fringe Benefit Funds
Wilson-McShane Corporation
3001 Metro Drive – Suite 500
Bloomington, MN 55425-1412

The Local 512 Collective Bargaining Agreement includes provisions for varying subsistence rates on projects, depending on the project location. For more specific information, please call the Local Union Main Office at (651)489-1488 or 1-(866)489-1488 (toll free).

IRON WORKERS LOCAL UNION NO. 512 REGIONAL WAGE/FRINGE SCHEDULE

Region B

Effective June 5, 2016

Base Wage Rate	Defined Benefit Pension	Defined Contribution Pension	Health & Welfare	Apprenticeship & Training Fund	IMPACT Fund	Fair Contracting Foundation	Total Package	Voluntary CAF
$31.54	$9.75	$6.00	$8.20	$0.95	$0.27	$0.02	$56.73	$0.04

$47.31	Journeyman time and one-half rate
$63.08	Journeyman double time rate

Leadman (two employees or less)	$1.00	per hour above Base Wage Rate.
Foreman (six employees or more)	$2.50	per hour above Base Wage Rate.
General Foreman	$4.00	per hour above Base Wage Rate.

Savings Plan Deduction ($3.25 per hour)
The Employer is required to deduct $3.25 per hour worked from the Employee's after-tax wages as the Savings Plan Deduction; calculated on an hours-worked basis and does not pyramid with overtime rates of pay.

Working Dues Check-Off Deduction
The Employer is required deduct from the Employee's after-tax wages, the amount equal to **5%** of the Employee's gross wages as a working dues check-off deduction. This deduction shall not apply to per diem, subsistence, mileage or bonus payments made to the employee.

Organizing Dues Check-Off Deduction
The Employer is required to deduct $0.10 per hour worked from the Employee's after-tax wages as an organizing dues check-off deduction, calculated on an hours-worked basis and does not pyramid with overtime rates of pay.

Fair Contracting Foundation (FCF)
Included in the Total Package amount is a contribution of $0.02 per hour worked, effective in all Regions of the Union. This contribution is to be reported as a separate line item and remitted to Twin City Iron Workers Fringe Benefit Funds with the other contributions and will be forwarded to FCF appropriately.

****Contract Administration Fund (C.A.F.)**
Not included in the Total Package amount is a voluntary Employer contribution of $0.04 per hour worked for the Contract Administration Fund.

When and Where to Send Contributions and Deductions
All fringe benefit fund contributions and payroll deductions are due no later than the 20th day of the month following the month when the hours were worked and should be remitted to:

Twin City Iron Workers Fringe Benefit Funds
Wilson-McShane Corporation
3001 Metro Drive – Suite 500
Bloomington, MN 55425-1412

The Local 512 Collective Bargaining Agreement includes provisions for varying subsistence rates on projects, depending on the project location. For more specific information, please call the Local Union Main Office at (651)489-1488 or 1-(866)489-1488 (toll free).

IRON WORKERS LOCAL UNION NO. 512 REGIONAL WAGE/FRINGE SCHEDULE

Region C

Effective June 5, 2016

Base Wage Rate	Defined Benefit Pension	Defined Contribution Pension	Health & Welfare	Apprenticeship & Training Fund	IMPACT Fund	Fair Contracting Foundation	Total Package	NDCC
$30.70	$9.75	$6.00	$8.20	$0.95	$0.27	$0.02	$55.89	$0.10

$46.05 Journeyman time and one-half rate
$61.40 Journeyman double time rate

Leadman (two employees or less)	$1.00	per hour above Base Wage Rate.
Foreman (three employees or more)	$2.50	per hour above Base Wage Rate.
General Foreman	$4.00	per hour above Base Wage Rate.

Savings Plan Deduction ($2.50 per hour)
The Employer is required to deduct $2.50 per hour worked from the Employee's after-tax wages as the Savings Plan Deduction; calculated on an hours-worked basis and does not pyramid with overtime rates of pay.

Working Dues Check-Off Deduction
The Employer is required deduct from the Employee's after-tax wages, the amount equal to **5%** of the Employee's gross wages as a working dues check-off deduction. This deduction shall not apply to per diem, subsistence, mileage or bonus payments made to the employee.

Organizing Dues Check-Off Deduction
The Employer is required to deduct $0.10 per hour worked from the Employee's after-tax wages as an organizing dues check-off deduction, calculated on an hours-worked basis and does not pyramid with overtime

Fair Contracting Foundation (FCF)
Included in the Total Package amount is a contribution of $0.02 per hour worked, effective in all Regions of the Union. This contribution is to be reported as a separate line item and remitted to Twin City Iron Workers Fringe Benefit Funds with the other contributions and will be forwarded to FCF appropriately.

****North Dakota Construction Council (NDCC**
The Employer agrees to contribute ten cents ($0.10) per hour worked in addition to the Total Package amounts set forth in this Agreement, for all bargaining unit work performed on sites covered by the North Dakota Construction Council (NDCC) and payable to the NDCC in accordance with the terms and conditions contained in the July 1, 2010 Letter of Understanding Relating to the North Dakota Construction Council (NDCC) between the parties to this Agreement.

When and Where to Send Contributions and Deductions
All fringe benefit fund contributions and payroll deductions are due no later than the 20th day of the month following the month when the hours were worked and should be remitted to:

Twin City Iron Workers Fringe Benefit Funds
Wilson-McShane Corporation
3001 Metro Drive – Suite 500
Bloomington, MN 55425-1412

The Local 512 Collective Bargaining Agreement includes provisions for varying subsistence rates on projects, depending on the project location. For more specific information, please call the Local Union Main Office at (651)489-1488 or 1-(866)489-1488 (toll free).

BUILDING WAGE RATES

Duluth/Cloquet Local #1091

Effective May 1, 2016:

Class	(Taxable) Wages	(Taxable) Vacation	H & W	Pension	Trng/Appr	LECET	SAFE		Total
1	$ 24.14	$ 2.20	$ 7.65	$ 6.75	$ 0.32	$ 0.08	$ 0.15	.....	$ 41.29
2	$ 24.24	$ 2.20	$ 7.65	$ 6.75	$ 0.32	$ 0.08	$ 0.15	.....	$ 41.39
3	$ 24.54	$ 2.20	$ 7.65	$ 6.75	$ 0.32	$ 0.08	$ 0.15	.....	$ 41.69
4	$ 24.84	$ 2.20	$ 7.65	$ 6.75	$ 0.32	$ 0.08	$ 0.15	.....	$ 41.99
5	$ 21.79	$ 2.20	$ 7.65	$ 6.75	$ 0.32	$ 0.08	$ 0.15	.....	$ 38.94

Example: Apprentice at 80% of Class 1 ONLY

Class 1	$ 19.31	$ 2.20	$ 7.65	$ 6.75	$ 0.32	$ 0.08	$ 0.15	.....	$ 36.46

Foreman/Leadman $1.50 above highest classification employed in.

Effective May 1, 2016 - $1.25 increase per hour

*** Vacation is a taxable wage and shall be paid for all hours worked and at 1 1/2 or 2 times the hourly rate when overtime is worked.

"All" Fringes are to be sent to :

Minnesota Laborers' Fringe Benefits Fund
P. O. Box 124
Minneapolis, MN 55440-0124
(651) 256-1800

HIGHWAY HEAVY WAGE RATES

District 2A - Duluth Local #1091

Effective May 1, 2016:

Class	(Taxable) Wages	(Taxable) Vacation	H & W	Pension	Trng/Appr	LECET	FCF		Total
1	$ 29.23	$ 2.30	$ 7.65	$ 6.75	$ 0.32	$ 0.08	$ 0.02	.....	$ 46.35
2	$ 29.43	$ 2.30	$ 7.65	$ 6.75	$ 0.32	$ 0.08	$ 0.02	.....	$ 46.55
3	$ 29.58	$ 2.30	$ 7.65	$ 6.75	$ 0.32	$ 0.08	$ 0.02	.....	$ 46.70
4	$ 29.68	$ 2.30	$ 7.65	$ 6.75	$ 0.32	$ 0.08	$ 0.02	.....	$ 46.80
5	$ 29.93	$ 2.30	$ 7.65	$ 6.75	$ 0.32	$ 0.08	$ 0.02	.....	$ 47.05
6	$ 31.73	$ 2.30	$ 7.65	$ 6.75	$ 0.32	$ 0.08	$ 0.02	.....	$ 48.85
7	$ 25.68	$ 2.30	$ 7.65	$ 6.50	$ 0.32	$ 0.08	$ 0.02	.....	$ 42.55

Example: Apprentice at 80% of Class 1 ONLY

Class 1	$ 23.30	$ 2.30	$ 7.65	$ 6.75	$ 0.32	$ 0.08	$ 0.02	.....	$ 40.42

Pipelayer, Laser Beam (sewer, water, gas) Classification 6 rate.
Foreman/Leadman $1.50 above highest classification employed in.
General Foreman $2.25 above Foreman scale (appointed at employers discretion).

*** Vacation is a taxable fringe and part of the gross wage, it shall be paid for all hours worked and at 1 1/2 or 2 times the hourly rate when overtime is worked

"All" Fringes are to be sent to :

Minnesota Laborers' Fringe Benefits Fund
P. O. Box 124
Minneapolis, MN 55440-0124
(651) 256-1800

NORTH CENTRAL STATES Regional Council of CARPENTERS

LOCAL 1348 MILLWRIGHT AGREEMENT

NORTHERN MINNESOTA

MILLWRIGHTS & MACHINE ERECTOR WAGE RATES

Effective May 3, 2015

Classification		Percent (%)	Gross Wages	Deductions: Savings	Deductions: Dues	Fringe Benefits: Health	Fringe Benefits: DB Pension	Fringe Benefits: DC Pension	Fringe Benefits: Apprentice/ Education	Fringe Benefits: Industry Promo Fund	Total Package
General Foreman	F + $1.75	100%	$36.57	-$3.50	$1.46	$6.33	$5.90	$1.90	$0.60	$0.05	$51.35
Foreman	JP + $2.25	100%	$34.82	-$3.50	$1.39	$6.33	$5.90	$1.90	$0.60	$0.05	$49.60
Journeyperson		100%	$32.57	-$3.50	$1.30	$6.33	$5.90	$1.90	$0.60	$0.05	$47.35
Apprentice	6001-7000	95%	$30.94	-$3.50	$1.24	$6.33	$5.90	$1.90	$0.60	$0.05	$45.72
	5001-6000	90%	$29.31	-$3.50	$1.17	$6.33	$5.90	$1.90	$0.60	$0.05	$44.09
	4001-5000	85%	$27.68	-$3.50	$1.11	$6.33	$5.90	$1.90	$0.60	$0.05	$42.46
	3001-4000	80%	$26.06	-$3.50	$1.04	$6.33	$5.90	$1.90	$0.60	$0.05	$40.84
	2001-3000	75%	$24.43	-$3.50	$0.98	$6.33	$5.90	$1.90	$0.60	$0.05	$39.21
	1001-2000	70%	$22.80	-$3.50	$0.91	$6.33	$5.90	$1.90	$0.60	$0.05	$37.58
	0 - 1000	65%	$21.17	-$3.50	$0.85	$6.33	$5.90	$1.90	$0.60	$0.05	$35.95

Covering the following Counties in the State of Minnesota, Aitkin, Becker, Beltrami, Carlton, Cass, Clearwater, Cook, Lake, Crow Wing, Hubbard, Itasca, Kittson, Koochiching, Lake of the Woods, Manomen, Marshall, Norman, Otter Tail, Pennington, Red Lake , Roseau, St. Louis, Wadena, Wilkin and that part of Clay County outside of a 5 mile radius of Moorhead and that part of Polk County outside of a 5 mile radius of East Grand Forks. In Wisconsin the County of Douglas and that portion of Bayfield County west of Highway 63, and west of a line drawn between Drummond and Herbster and the Lake Superior shore, including the cities of Drummond and Herbster.

May 1, 2016 Increase: $1.75 Allocation TBD **May 7, 2017 Increase: $1.85 Allocation TBD**

INTERNATIONAL UNION OF OPERATING ENGINEERS, LOCAL NO. 49
RATES FOR THE:

BUILDERS AGREEMENT – MINNESOTA

WAGES EFFECTIVE MAY 1, 2016 - ZONE 1

Group	Wages	2% of Gross Wages Excluding Fringes	H&W	HRA	Pension	Appren-ticeship Training	Total	FCF $.02***	"Voluntary" **NOT** Included In Total Pkg C.A.F. $.04**
1	$39.14	*	$9.10	$.50	$8.30	$.50	$57.54	$.02	$.04
2	$38.80	*	$9.10	$.50	$8.30	$.50	$57.20	$.02	$.04
3	$37.39	*	$9.10	$.50	$8.30	$.50	$55.79	$.02	$.04
4	$37.05	*	$9.10	$.50	$8.30	$.50	$55.45	$.02	$.04
5	$36.13	*	$9.10	$.50	$8.30	$.50	$54.53	$.02	$.04
6	$34.62	*	$9.10	$.50	$8.30	$.50	$53.02	$.02	$.04
7	$33.50	*	$9.10	$.50	$8.30	$.50	$51.90	$.02	$.04
8	$31.49	*	$9.10	$.50	$8.30	$.50	$49.89	$.02	$.04

WAGES EFFECTIVE MAY 1, 2016 - ZONE 2

Group	Wages	2% of Gross Wages Excluding Fringes	H&W	HRA	Pension	Appren-ticeship Training	Total	FCF $.02***	"Voluntary" **NOT** Included In Total Pkg C.A.F. $.04**
1	$37.25	*	$9.10	$.50	$8.30	$.50	$55.65	$.02	$.04
2	$36.93	*	$9.10	$.50	$8.30	$.50	$55.33	$.02	$.04
3	$35.60	*	$9.10	$.50	$8.30	$.50	$54.00	$.02	$.04
4	$35.28	*	$9.10	$.50	$8.30	$.50	$53.68	$.02	$.04
5	$34.37	*	$9.10	$.50	$8.30	$.50	$52.77	$.02	$.04
6	$32.95	*	$9.10	$.50	$8.30	$.50	$51.35	$.02	$.04
7	$31.89	*	$9.10	$.50	$8.30	$.50	$50.29	$.02	$.04
8	$30.00	*	$9.10	$.50	$8.30	$.50	$48.40	$.02	$.04

INTERNATIONAL UNION OF OPERATING ENGINEERS, LOCAL No. 49
FOR THE:

HIGHWAY AND HEAVY WAGES EFFECTIVE MAY 1, 2016

EASTERN METROPOLITAN ZONE-(ZONE 1)

Group	Wages	1 ½% of Gross Wages Excluding Fringes	H/W	HRA	Pension	Appren.	Totals	FCF $.02	"Voluntary" **NOT** Incl. in total Pkg IPF $.04
1	$35.39	**	$9.10	$1.00	$8.30	$.50	$54.29	$.02	$.04
2	34.39	**	9.10	1.00	8.30	.50	53.29	.02	.04
3	33.84	**	9.10	1.00	8.30	.50	52.74	.02	.04
4	33.54	**	9.10	1.00	8.30	.50	52.44	.02	.04
5	30.50	**	9.10	1.00	8.30	.50	49.40	.02	.04
6	29.29	**	9.10	1.00	8.30	.50	48.19	.02	.04

REMAINDER OF EASTERN ZONE-(ZONE 2)

Group	Wages	1 ½% of Gross Wages Excluding Fringes	H/W	HRA	Pension	Appren.	Totals	FCF $.02	"Voluntary" **NOT** Incl. in total Pkg IPF $.04
1	$32.73	**	$9.10	$1.00	$8.30	$.50	$51.63	$.02	$.04
2	31.73	**	9.10	1.00	8.30	.50	50.63	.02	.04
3	31.28	**	9.10	1.00	8.30	.50	50.18	.02	.04
4	30.98	**	9.10	1.00	8.30	.50	49.88	.02	.04
5	28.41	**	9.10	1.00	8.30	.50	47.31	.02	.04
6	27.54	**	9.10	1.00	8.30	.50	46.44	.02	.04

WESTERN ZONE-(ZONE 3)

Group	Wages	1 ½% of Gross Wages Excluding Fringes	H/W	HRA	Pension	Appren.	Totals	FCF $.02	"Voluntary" **NOT** Incl. in total Pkg IPF $.04
1	$27.35	**	$9.10	$1.00	$8.30	$.50	$46.25	$.02	$.04
2	26.35	**	9.10	1.00	8.30	.50	45.25	.02	.04
3	25.42	**	9.10	1.00	8.30	.50	44.32	.02	.04
4	25.11	**	9.10	1.00	8.30	.50	44.01	.02	.04
5	23.40	**	9.10	1.00	8.30	.50	42.30	.02	.04
6	22.80	**	9.10	1.00	8.30	.50	41.70	.02	.04

Local 106 Painters & Drywall Wage Rates
Effective May 2, 2016

Journeyperson Wage Rates:

Res., Comm. & Indus. Repaint	Base	Health & Welfare	Pension	Annuity	FTI/UM	FTI/NT'L	FCF	LMCI	MPWEA	STAR	DC82/FCF	**Total**	Vac *	Check-off Dues**
Class I	$28.36	$7.20	$5.40	$3.75	$0.37	$0.10	$0.01	$0.10	$0.03	$ 0.10	$0.01	$45.43	$2.95	$1.79
Class II	$28.96	$7.20	$5.40	$3.75	$0.37	$0.10	$0.01	$0.10	$0.03	$ 0.10	$0.01	$46.03	$2.95	$1.81

New Comm. & New Indus.	Base	Health & Welfare	Pension	Annuity	FTI/UM	FTI/NT'L	FCF	LMCI	MPWEA	STAR	DC82/FCF	**Total**	Vac *	Check-off Dues**
Class I	$29.86	$7.20	$5.40	$3.75	$0.37	$0.10	$0.01	$0.10	$0.03	$ 0.10	$0.01	$46.93	$2.95	$1.84
Class II	$30.46	$7.20	$5.40	$3.75	$0.37	$0.10	$0.01	$0.10	$0.03	$ 0.10	$0.01	$47.53	$2.95	$1.86

Foremen in charge of five (5) or more journeypersons shall be paid $1.00 per hour over the journeyperson rate.

Fair Contracting Foundation: $0.01 paid by employer, $0.01 paid by employee from Total Package.

Painter Apprentice

Hours	**%**	Base	Health & Welfare	Pension	Annuity	FTI/UM	FTI/NT'L	FCF	LMCI	MPWEA	STAR	DC82/FCF	**Total**	Vac *	Check-off Dues**
0-1000	50	$14.93	$7.20	$5.40	$3.75	$0.37	$0.10	$0.01	$0.10	$0.03	$ 0.10	$0.01	$32.00	$2.95	$1.32
1001-2000	55	$16.42	$7.20	$5.40	$3.75	$0.37	$0.10	$0.01	$0.10	$0.03	$ 0.10	$0.01	$33.49	$2.95	$1.37
2001-3000	60	$17.92	$7.20	$5.40	$3.75	$0.37	$0.10	$0.01	$0.10	$0.03	$ 0.10	$0.01	$34.99	$2.95	$1.42
3001-4000	70	$20.90	$7.20	$5.40	$3.75	$0.37	$0.10	$0.01	$0.10	$0.03	$ 0.10	$0.01	$37.97	$2.95	$1.53
4001-5000	80	$23.89	$7.20	$5.40	$3.75	$0.37	$0.10	$0.01	$0.10	$0.03	$ 0.10	$0.01	$40.96	$2.95	$1.63
5001-6000	90	$26.87	$7.20	$5.40	$3.75	$0.37	$0.10	$0.01	$0.10	$0.03	$ 0.10	$0.01	$43.94	$2.95	$1.74

Drywall Taper Appr

Hours	**%**	Base	Health & Welfare	Pension	Annuity	FTI/UM	FTI/NT'L	FCF	LMCI	MPWEA	STAR	DC82/FCF	**Total**	Vac *	Check-off Dues**
0-500	50	$15.23	$7.20	$5.40	$3.75	$0.37	$0.10	$0.01	$0.10	$0.03	$ 0.10	$0.01	$32.30	$2.95	$1.33
501-1000	60	$18.28	$7.20	$5.40	$3.75	$0.37	$0.10	$0.01	$0.10	$0.03	$ 0.10	$0.01	$35.35	$2.95	$1.44
1001-1500	70	$21.32	$7.20	$5.40	$3.75	$0.37	$0.10	$0.01	$0.10	$0.03	$ 0.10	$0.01	$38.39	$2.95	$1.54
1501-2000	75	$22.85	$7.20	$5.40	$3.75	$0.37	$0.10	$0.01	$0.10	$0.03	$ 0.10	$0.01	$39.92	$2.95	$1.60
2001-2500	80	$24.37	$7.20	$5.40	$3.75	$0.37	$0.10	$0.01	$0.10	$0.03	$ 0.10	$0.01	$41.44	$2.95	$1.65
2501-3000	85	$25.89	$7.20	$5.40	$3.75	$0.37	$0.10	$0.01	$0.10	$0.03	$ 0.10	$0.01	$42.96	$2.95	$1.70
3001-3500	90	$27.41	$7.20	$5.40	$3.75	$0.37	$0.10	$0.01	$0.10	$0.03	$ 0.10	$0.01	$44.48	$2.95	$1.76
3501-4000	95	$28.94	$7.20	$5.40	$3.75	$0.37	$0.10	$0.01	$0.10	$0.03	$ 0.10	$0.01	$46.01	$2.95	$1.81

*This Vacation Contribution is included in the taxable wage listed above, then deducted and remitted along with your Health & Welfare contribution.

PLUMBERS & STEAMFITTERS LOCAL #11

4402 AIRPARK BLVD.
DULUTH, MN 55811

JEFFREY DAVEAU SR.
BUSINESS MANAGER

218-727-2199 PHONE
218-727-2298 FAX

WAGE & BENEFIT REVISION EFFECTIVE MAY 2, 2016

BUILDING TRADES JOURNEYMAN

Base Pay	**$35.69**
Savings Fund	2.00
Dues Check off	.96
Building Fund	.20
Organizing Fund	.15
UA-PEC	.05
Local PAC	.01
Death Assessment	.01
Total Taxable	**$39.07**

Fringes	
Health & welfare	7.20
H R Fund	.15
Local Pension	6.25
National Pension	.78
Money Purchase	3.50
Training Fund	.50
International Training Fund	.10
Industry Fund	.35
H.V.A.C	.25
Total Fringes	**$19.08**
Total package	**$58.15**

Foreman $2.50 over Base Pay
General Foreman $3.50 over Base Pay

WAGES AS OF 5-2-2016	JOURNEYMAN	95%	90%	85%	80%	75%	70%
TAXABLE		⬇	⬇	⬇	⬇	⬇	⬇
BASE PAY	$ 35.69	$ 33.91	$ 32.12	$ 30.34	$ 28.55	$ 26.77	$ 24.98
SAVINGS FUND	$ 2.00	$ 1.90	$ 1.80	$ 1.70	$ 1.60	$ 1.50	$ 1.40
UNION DUES & ASSESSMENTS	$ 1.38	$ 1.38	$ 1.38	$ 1.38	$ 1.38	$ 1.38	$ 1.38
TOTAL TAXABLE	$ 39.07	$ 37.19	$ 35.30	$ 33.42	$ 31.53	$ 29.65	$ 27.76
FRINGES							
TRAINING FUND	$ 0.50	$ 0.50	$ 0.50	$ 0.50	$ 0.50	$ 0.50	$ 0.50
H R FUND	$ 0.15	$ 0.15	$ 0.15	$ 0.15	$ 0.15	$ 0.15	$ 0.15
HVAC	$ 0.25	$ 0.25	$ 0.25	$ 0.25	$ 0.25	$ 0.25	$ 0.25
UA TRAINING FUND	$ 0.10	$ 0.10	$ 0.10	$ 0.10	$ 0.10	$ 0.10	$ 0.10
HEALTH & WELFARE	$ 7.20	$ 7.20	$ 7.20	$ 7.20	$ 7.20	$ 7.20	$ 7.20
UA PENSION	$ 0.78	$ -	$ -	$ -	$ -	$ -	$ -
LOCAL PENSION	$ 6.25	$ 6.25	$ 6.25	$ 6.25	$ 6.25	$ 6.25	$ 6.25
MONEY PURCHASE	$ 3.50	$ 3.33	$ 3.15	$ 2.98	$ 2.80	$ 2.63	$ 2.45
INDUSTRY DEVELOPMENT	$ 0.35	$ 0.35	$ 0.35	$ 0.35	$ 0.35	$ 0.35	$ 0.35
TOTAL FRINGES	$ 19.08	$ 18.13	$ 17.95	$ 17.78	$ 17.60	$ 17.43	$ 17.25
TOTAL PACKAGE	$ 58.15	$ 55.32	$ 53.25	$ 51.20	$ 49.13	$ 47.08	$ 45.01

WAGES AS OF 5-2-2016	65%	60%	55%	50%	45%	40%	
TAXABLE	⬇	⬇	⬇	⬇	⬇	⬇	
BASE PAY	$ 23.20	$ 21.41	$ 19.63	$ 17.85	$ 16.06	$ 14.28	
SAVINGS FUND	$ 1.30	$ 1.20	$ 1.10	$ 1.00	$ 0.90	$ 0.80	
UNION DUES AND ASSESSMENTS	$ 1.38	$ 1.38	$ 1.38	$ 1.38	$ 1.38	$ 1.38	
TOTAL TAXABLE	$ 25.88	$ 23.99	$ 22.11	$ 20.23	$ 18.34	$ 16.46	
FRINGES							
TRAINING FUND	$ 0.50	$ 0.50	$ 0.50	$ 0.50	$ 0.50	$ 0.50	
HR FUND	$ 0.15	$ 0.15	$ 0.15	$ 0.15	$ 0.15	$ 0.15	
HVAC	$ 0.25	$ 0.25	$ 0.25	$ 0.25	$ 0.25	$ 0.25	
UA TRAINING FUND	$ 0.10	$ 0.10	$ 0.10	$ 0.10	$ 0.10	$ 0.10	
HEALTH & WELFARE	$ 7.20	$ 7.20	$ 7.20	$ 7.20	$ 7.20	$ 7.20	
UA PENSION	$ -	$ -	$ -	$ -	$ -	$ -	
LOCAL PENSION	$ 6.25	$ 6.25	$ 6.25	$ 6.25	$ 6.25	$ 6.25	
MONEY PURCHASE	$ 2.28	$ -	$ -	$ -	$ -	$ -	
INDUSTRY DEVELOPMENT	$ 0.35	$ 0.35	$ 0.35	$ 0.35	$ 0.35	$ 0.35	
TOTAL FRINGES	$ 17.08	$ 14.80	$ 14.80	$ 14.80	$ 14.80	$ 14.80	
TOTAL PACKAGE	$ 42.96	$ 38.79	$ 36.91	$ 35.03	$ 33.14	$ 31.26	

WAGE BREAKDOWN FOR LOCAL UNION # 11 APPRENTICES - BEGINNING MAY 2, 2016

Wages/Benefits Roofers Local Union 96 - Duluth Area

Effective July 1, 2016

Through June 30, 2017

Classification		Basic Hourly Wage	Vac. After Taxes	Assess. After Taxes	Taxable Wage Rate	National Pension Rate	Educ Fund Rate	Annuity Fund Rate	Health/ Welfare Rate	H&W HRA Rate	Appr. Training Rate	Roofing Industry Rate	Total Cost to Employer
Journeyman		30.00	2.50	0.50	33.00	3.55	0.03	3.09	7.60	0.50	0.35	0.30	48.42
Foreman		32.00	2.50	0.50	35.00	3.80	0.03	3.09	7.60	0.50	0.35	0.30	50.67
Apprentice Percentages Based on Hours Worked for Advancement:													
55%	A 0-250	17.75		0.40	18.15	0.25	0.03				0.35	0.30	19.08
55%	B 251-1500	17.75		0.40	18.15	0.25	0.03		6.00		0.35	0.30	25.08
60%	1501-2500	19.30		0.50	19.80	0.25	0.03	0.25	7.00		0.35	0.30	27.98
Freeze Unless 144 Hours (Phase 1) of Related Training is Completed													
65%	2501-3000	20.95		0.50	21.45	0.50	0.03	0.50	7.60	0.50	0.35	0.30	31.23
70%	3001-3500	22.60		0.50	23.10	0.50	0.03	0.50	7.60	0.50	0.35	0.30	32.88
75%	3501-4000	24.25		0.50	24.75	0.50	0.03	0.50	7.60	0.50	0.35	0.30	34.53
80%	4001-4500	23.40	2.50	0.50	26.40	0.75	0.03	0.75	7.60	0.50	0.35	0.30	36.68
Freeze Unless 288 Hours (Phase 2) of Related Training is Completed													
85%	4501-5000	25.05	2.50	0.50	28.05	0.75	0.03	0.75	7.60	0.50	0.35	0.30	38.33
90%	5001-5500	26.70	2.50	0.50	29.70	1.00	0.03	0.75	7.60	0.50	0.35	0.30	40.23
95%	5501-6000	28.35	2.50	0.50	31.35	1.00	0.03	0.75	7.60	0.50	0.35	0.30	41.88

Advancement to Journeyman if All Related Training (Phase 3) is Completed and **6000** Hours Worked

Due:		
	July 1, 2017:	$1.30
	July 1, 2018:	$1.30
	July 1, 2019:	$1.40
	July 1, 2020:	$1.40

Expiration date: June 30, 2021

DULUTH
COMMERCIAL & INDUSTRIAL
SHEET METAL WAGE RATES

EFFECTIVE MAY 2, 2016 - April 30, 2017

SOUTHERN ST. LOUIS, AITKIN, CARLTON, LAKE, COOK, AND DOUGLAS COUNTIES

			TAXABLE BASE*	SASMI	Health Fund	NATL PENSION	SUPP. PENSION	LOCAL 10 PENSION	FCF & LOCAL T.F.	SMOHI NEMI & ITI	LOCAL I.F. & DRUG TESTING	TOTAL PACKAGE
Journeyman			$31.87	$1.65	$9.27	$11.18	$2.37	$0.45	$0.64	$0.17	$0.23	$57.83
Foreman			33.87	1.65	9.27	11.18	2.37	0.45	0.64	0.17	0.23	59.83
General Foreman			35.87	1.65	9.27	11.18	2.37	0.45	0.64	0.17	0.23	61.83
Apprentice	HOURS											
	0-1000	55	17.53	1.04	9.27	6.15	1.30	0.25	0.64	0.17	0.23	36.58
	1001-2000	59	18.80	1.09	9.27	6.60	1.40	0.27	0.64	0.17	0.23	38.47
	2001-3000	63	20.08	1.14	9.27	7.04	1.49	0.28	0.64	0.17	0.23	40.34
	3001-4000	68	21.67	1.21	9.27	7.60	1.61	0.31	0.64	0.17	0.23	42.71
	4001-5000	72	22.95	1.27	9.27	8.05	1.71	0.32	0.64	0.17	0.23	44.61
	5001-6000	76	24.22	1.32	9.27	8.50	1.80	0.34	0.64	0.17	0.23	46.49
	6001-7000	80	25.50	1.38	9.27	8.94	1.90	0.36	0.64	0.17	0.23	48.39
	7001-8000	84	26.77	1.43	9.27	9.39	1.99	0.38	0.64	0.17	0.23	50.27
Classified worker												
	0-500	45	14.17	0.00	0.00	0.00	0.00	0.00	0.64	0.17	0.00	14.98
Plan B Single	501-on	45	14.17	0.00	3.09	2.62	0.00	0.00	0.64	0.17	0.00	20.69
Plan B Family	501-on	45	10.12	0.00	7.14	2.62	0.00	0.00	0.64	0.17	0.00	20.69

*The Taxable Base Pay rate includes $2.58 Vacation and Organizing deduction for journeymen and $1.58 for apprentices. The Vacation Fund deduction is $2.00 per hour for journeymen ($1.00 per hour for apprentices) and $.58 per hour for Organizing for both Journeymen and apprentices. For classified workers, the Vacation Fund deduction is $.55 per hour and there is a $.23 deduction for Organizing for a total deduction of $.78.

SASMI NOTE: The SASMI rate for Foreman and General Foreman are the same as the rate for Journeymen and there is no longer a different SASMI rate for overtime hours on any classification. All SASMI hours are paid at the straight time rate.

Effective May 1, 2017, these will be a $1.65 total package increase and on April 30, 2018 these will be a $1.75 total package increase. The fringe benefit allocation will be made at those times.

The current IRS mileage rate is $.54

May 6, 2016 Contract expires April 28, 2019

Shawn Broadrick
Business Manager

Brian W. Dunn
Financial Secretary Treasurer

James E. Tucker
President-Organizer

SPRINKLER FITTERS

Minnesota Breakdown of Wage and Benefit Package

Wage Rate	4/1/16	4/1/17	4/1/18	4/1/19	4/1/20
	$35.08	$36.33	$37.58	TBD	TBD

Foreman's Rate: $2.75 above journeyman scale
General Foreman: $5.00 above journeyman scale (22+ men on job)
Local Union 669 has a 5% dues check-off; 2 1/2% for Apprentices Class 1-4

Payroll Deduction:

Extended Benefit Fund: $.25 per hour for all hours worked payable to Local Union 669

Industry Advancement-State of Minnesota

Class 5 and higher $.25 per hour for all hours worked payable to Local Union 669

Benefit Package

Health & Welfare 4/1/16	$8.77	per hour for all hours worked
Health & Welfare 1/1/17	$9.17	per hour for all hours worked
Health & Welfare 1/1/18	$9.67	per hour for all hours worked
Health & Welfare 1/1/19	$10.02	per hour for all hours worked
Health & Welfare 1/1/20	TBD	
Health & Welfare 1/1/21	TBD	
Pension 4/1/16	$6.05	per hour for all hours worked
Pension 1/1/17	$6.20	per hour for all hours worked
Pension 1/1/18	$6.40	per hour for all hours worked
Pension 1/1/19	$6.60	per hour for all hours worked
Pension 1/1/20	TBD	
Pension 1/1/21	TBD	
Education 4/1/16	$ .35	per hour for all hours worked
Education 4/1/17	$ .37	per hour for all hours worked
Education 4/1/18	$ .42	per hour for all hours worked
International Training Fund 4/1/16	$ .10	per hour for all hours worked
Industry Promotion 4/1/16	$ .25	per hour for all hours worked
Supplemental Pension 4/1/16	$2.50	per hour for all hours worked
Supplemental Pension 4/1/17	$2.65	per hour for all hours worked
Supplemental Pension 4/1/18	$2.90	per hour for all hours worked
Supplemental Pension 4/1/19	TBD	
Supplemental Pension 4/1/20	TBD	

Travel Expenses	4/1/16	1/1/17	1/1/18	1/1/19
0-60 miles	No expenses	No expenses	No expenses	No expenses
60-80 miles	$17.50	$19.00	$19.00	$19.00
80-100 miles	$27.50	$29.00	$29.00	$29.00
100+ miles	$80.00	$90.00	$100.00	$105.00

If you should have any additional questions, please feel free to contact Business Agent James Westby at (507) 493-5671 or this office.

Created May 2016

Road Sprinkler Fitters Local Union No. 669
7050 Oakland Mills Road • Suite 200 • Columbia, Maryland 21046
(410) 381-4300 • fax: (301) 621-8045 • www.sprinklerfitters669.org

SCHEDULE 9 - SUNDAY AND HOLIDAYS

A. All work performed between midnight Saturday night and midnight Sunday night shall be classed as Sunday work and paid for at the rate of two (2) times the regular hourly rate; except as a regular shift which ends on Sunday or a holiday morning or begins at or after 6:00 p.m. on a Sunday or a holiday evening, shall be paid at the straight time rate.

B. Work performed on Sundays and the following holidays shall be compensated for at the rate of two (2) times the regular hourly rate: New Years Day, Memorial Day, Independence Day, Labor Day, Thanksgiving Day and Christmas Day. When Monday is designated and celebrated as one of the above listed legal holidays according to the regulations produced by the Federal government, they shall be observed as such.

DULUTH, SUPERIOR, AND IRON RANGE CONTRACTORS/BUILDERS SUPPLEMENTS - LOCAL 346

SCHEDULE 1 - CLASSIFICATIONS AND WAGES

Classifications:

GROUP 1
Boom Truck Operator

GROUP 2
Ready-Mix Driver
Tractor-Trailer Driver

GROUP 3
Driver and Warehouseman Foreman
Mechanic (where required)
Fork Lift Operator
Tandem or 3 Axle Truck Driver

GROUP 4
Warehouseman
Farm Tractor Driver
Single or 2 Axle Truck Driver
Dumpman

May 1, 2014

Group	Wages	Health & Welfare	Pension
1	$26.60	$ 7.95	$ 5.55
2	$26.05	$ 7.95	$ 5.55
3	$25.85	$ 7.95	$ 5.55
4	$25.60	$ 7.95	$ 5.55

Boom Truck Operator to receive an additional 50¢ increase 1st and 2nd year above the current rate in effect.

May 1, 2015

Group	Wages	Health & Welfare	Pension
1	$27.10	$ 8.15	$ 6.30
2	$26.55	$ 8.15	$ 6.30
3	$26.35	$ 8.15	$ 6.30
4	$26.10	$ 8.15	$ 6.30

May 1, 2016

Group	Wages	Health & Welfare	Pension
1	$27.75	$ 8.35	$ 6.90
2	$27.20	$ 8.35	$ 6.90
3	$27.00	$ 8.35	$ 6.90
4	$26.75	$ 8.35	$ 6.90

All monies negotiated into the benefits will be used only as needed.

Note A: When a contractor deems it advisable to hire an Apprentice Mechanic, his scale shall be as follows:

1st Year: 70% of Class 1 scale
2nd Year: 85% of Class 1 scale
After second full year, 100% of Class 1 scale

Health & Welfare and Pension paid to Minnesota Teamsters Construction Division Fringe Benefit Funds, c/o Zenith Administrators, P.O. Box 31, Minneapolis, Minnesota 55440-

SPECIAL PROVISIONS

DIV SHW – HOT WATER

DULUTH ENERGY SYSTEM
HOT WATER PLANT CONNECTION
PHASES 1 & 2

City Project #1601

City of Duluth, Minnesota
411 West 1st Street
Duluth, MN 55802

CERTIFICATION

I HEREBY CERTIFY THAT THIS plan, SPECIFICATION or report was prepared by me or under my direct supervision and that I am a duly Licensed Professional Engineer under the laws of the State of Minnesota.

Signature	SEAN M McFARLING, PE Typed or Printed Name
7/28/17 Date	47062 License No.

TABLE OF CONTENTS

SHW-1 NOTICE TO ALL BIDDERS

SHW-2 SUMMARY OF WORK

SHW-3 CONTACT INFORMATION

SHW-4 PRE-BID CONFERENCE

SHW-5 COORDINATION WITH OTHER WORK

SHW-6 STEAM AND HOT WATER VALVE OPERATIONS

SHW-7 INSURANCE PROVISIONS

SHW-8 THERMAL/WEATHER CONSTRAINTS

SHW-9 CONSTRUCTION SEQUENCING REQUIREMENTS

SHW-10 MEASUREMENT AND PAYMENT

SHW-11 (1201) PREQUALIFICATION OF BIDDERS

SHW-12 (1209) DELIVERY OF PROPOSALS

SHW-13 (1404) MAINTENANCE OF TRAFFIC, (1707) PUBLIC SAFETY, AND (2563) TRAFFIC CONTROL

SHW-14 (1507) UTILITY PROPERTY AND SERVICE

SHW-15 (1508) CONSTRUCTION STAKES, LINES, AND GRADES

SHW-16 SUBMITTALS

SHW-17 (1516) ACCEPTANCE

SHW-18 (1603) MATERIALS: SPECIFICATIONS, SAMPLES, TESTS, AND ACCEPTANCE

SHW-19 (1605) SUBSTITUTE MATERIALS

SHW-20 (1609) DEPARTMENT PROVIDED MATERIAL

SHW-21 (1702) PERMITS, LICENSES, AND TAXES

SHW-22 (1806) DETERMINATION AND EXTENSION OF CONTRACT TIME

SHW-23 METERING COMMUNICATIONS SYSTEM

SHW-24 (2105) EARTHWORK AND PIPE BACKFILL

SHW-25 (2506) CONCRETE & UTILITY STRUCTURES

SHW-26 (2451) EXCAVATION, BACKFILL AND COMPACTION FOR UTILITIES

SHW-27 (2105/2451) ROCK BLASTING AND VIBRATION CONTROL

SHW-28 (2508) EXTERIOR HOT WATER PIPE

Appendix A	Hot Water Pipe Construction Quality Assurance Documents
Appendix B	Manufacturer's Hot Water Alarm Wiring and Joint sealing Installation Instructions
Appendix C	Manufacturer's Expansion Pad Installation Instructions

The following forms and regulations/rules/statutes and interpretations, which are incorporated by reference in this contract, are available on the World Wide Web at the sites listed below or attached to these Special Provisions as attachments. The City of Duluth will use its best efforts to ensure that the most recent, applicable forms and regulations/rules/statutes and interpretations are included on the web sites provided; however, if you are the successful bidder, prior to signing the contract, you are responsible for comparing the versions of the forms and regulations/rules/statutes and interpretations attached to the contract which you are signing with the versions on the web to ensure conformity. Hard copies of all forms are available at the Engineering Division.

THE VERSIONS OF THE FORMS AND REGULATIONS/RULES/STATUTES and INTERPRETATION ATTACHED TO THE CONTRACT WILL BE CONTROLLING.

FORM	FUND	WEB SITE
Uniform Building Code	HW	http://www.dli.mn.gov/ccld/codes.asp
Uniform Mechanical Code: Heating, Ventilation, Air Conditioning, Refrigeration Rules contained in Minnesota Rules.	HW	http://www.dli.mn.gov/ccld/hvac.asp
National Electric Code	HW	http://www.nfpa.org/codes-and-standards/all-codes-and-standards/list-of-codes-and-standards?mode=code&code=70
Uniform Fire Code and National Fire Codes	HW	http://www.nfpa.org/codes-and-standards/all-codes-and-standards/list-of-codes-and-standards?mode=code&code=1
American National Standard Institute (ANSI) Section B31.1 – Power Piping	HW	https://www.asme.org/products/codes-standards/b311-2014-power-piping
American Society of Mechanical Engineers (ASME) Boiler & Pressure Vessel Code, Sections II and IX.	HW	https://www.asme.org/shop/standards/new-releases/boiler-pressure-vessel-code-2013
American Welding Society (AWS)	HW	https://www.aws.org/standards
Materials Transfer Record	HW	
HWP Inspection and Testing Plan	HW	
HWP Alarm Wire Test Form - Resistance	HW	
HWP Alarm System Loop Test Report	HW	
Pipe Cleaning and Preservation Form	HW	
Leakage Test Report	HW	

By signature below, the Contractor acknowledges acceptance of all items in this proposal including the indemnification provisions, and agrees that this bid, is good for _____ days (minimum of 30 required) from the date of the signature below. Proposal prepared by:

Printed Name	Signature	Date

SHW-1 NOTICE TO ALL BIDDERS

The 2017 Edition of the City of Duluth Public Works & Utilities Department/Engineering Division "Construction Standards" book and any addendums or supplements is incorporated by reference and is deemed to be a part hereof as if fully incorporated and set forth herein. The 'Construction Standards' is available on the City website at: http://www.duluthmn.gov/engineering/standard-construction-specifications/.

SHW-2 SUMMARY OF WORK

This work shall consist of the installation of pre-insulated, thin-walled, steel hot water piping, fittings, valves, and appurtenances. All work shall be performed according to these Special Provisions and the 2017 City of Duluth, Minnesota Construction Standards.

Phase 1 Contract – 1st Ave West and Michigan Street Intersection

Install 200 feet of new hot water pipe in coordination with the City watermain project between the limits shown on the plans. Including fitting, welding, insulation, and sealing of hot water pipes and fittings; furnishing and installing PVC communications conduits above hot water piping; furnishing and installing communications handholes; bedding and backfill of hot water piping up to one foot (1') above the top of the hot water piping. Bedrock encountered during the excavation will be removed via Rock Excavation. Phase 1 Contract will not require surface removal, excavation, or restoration.

Phase 1 Contract will be performed under a separate contract and is shown for clarification and coordination purposes only.

Phase 2 Contract – 1st Avenue West and Michigan to Sta. 6+80

Install 700 feet of new hot water pipe between the limits shown on the plans. Including removal of affected surface features, excavation to required elevation; fitting, welding, insulation, and sealing of hot water pipes and fittings; filling hot water pipe with nitrogen gas for preservation purposes through the hose connections on the end caps; furnishing and installing PVC communications conduits above hot water piping; bedding and backfill of hot water piping, and restoration of surface features to existing conditions. Bedrock encountered during the excavation will be removed via Rock Excavation Bid Item. Phase 2 Contract will require surface removal and restoration.

Phase 2 Contract Add Alternate – Sta. 6+80 to Sta. 7+35

Install 110 feet of new hot water pipe between the limits shown on the plans. Including removal of affected surface features, excavation to required elevation; fitting, welding, insulation, and sealing of hot water pipes and fittings; filling hot water pipe with nitrogen gas for preservation purposes through the hose connections on the end caps; furnishing and installing PVC communications conduits above hot water piping; bedding and backfill of hot water piping, and restoration of surface features to existing conditions. Bedrock encountered during the excavation will be removed via Rock Excavation Bid Item. Phase 2 Contract Add Alternate will require surface removal and restoration.

SHW-3 CONTACT INFORMATION

Questions regarding this project should be directed via email to purchasing@duluthmn.gov. Responses will be issued as an addendum.

SHW-4 PRE-BID CONFERENCE

A Pre-Bid Conference will be held on Thursday, August 10th at 11:00 A.M. in Room 106A City Hall, 411 West First Street, Duluth, MN. Potential bidders are strongly encouraged to attend.

SHW-5 COORDINATION WITH OTHER WORK

The Contractor shall coordinate with Duluth Energy Systems, the City, and their contractors. Coordination efforts will be considered as incidental to the cost of the project, and no additional compensation will be provided therefore.

SHW-6 STEAM AND HOT WATER VALVE OPERATIONS

Duluth Energy Systems representatives will perform all valve operations necessary to isolate, drain, and fill all steam and hot water piping. The CONTRACTOR shall be responsible for planning his/her work in accordance with the contract sequencing detailed in these Special Provisions. The Contractor shall notify the Duluth Energy System representative a minimum of two (2) weeks in advance of any work that is planned to occur on existing Duluth Energy System facilities (disconnection, reconnection, capping, etc.) where system shutdown or isolation is required. The CONTRACTOR shall be responsible for providing the materials necessary for removing water from the work site when required.

SHW-7 INSURANCE PROVISIONS

The Insurance Provisions of paragraph S-1 of the Construction Standards for the City of Duluth, Minnesota shall be amended to include the following:

Duluth Energy Systems shall be listed as an additional insured in addition to the City of Duluth.

SHW-8 THERMAL/WEATHER CONSTRAINTS

Work on the hot water system shall only be performed when the daytime average temperatures are greater than thirty-two degrees Fahrenheit (32 ^{o}F).

SHW-9 CONSTRUCTION SEQUENCING REQUIREMENTS

The following phasing sequence shall be followed for completing installation of Duluth Energy System facilities. The CONTRACTOR shall not deviate from this sequencing without prior written authorization from the Owner and Duluth Energy System Representative. Duluth Energy System personnel will perform all pipe draining and filling activities required for the CONTRACTOR to perform construction activities.

<u>Phase 1 Contract – 1st Avenue West & Michigan Street Intersection</u>

Summary: Install new HWP through the Michigan Street intersection in coordination with the City's watermain construction project. Install weld end caps at the north end of the 1st Avenue intersection until the future connection on 1st Avenue West.

Parameters: Work shall occur in coordination with the City watermain project and subject to the temperature constraints of **SHW-8 Thermal/Weather Constraints**.

Note: Phase 1 Contract will be performed under a separate contract and is shown for coordination and clarification purposes only.

Phase 2 Contract – 1st Avenue West & Michigan Street to Sta. 6+80

Summary: Install new HWP along Michigan Street from the Phase 1 Contract end point to the future connection point on Michigan Street. Install weld end caps at the east end for the future connection to the Duluth Energy Systems plant.

Parameters: Work shall occur between August 28, 2017 and October 31, 2017 and subject to the temperature constraints of **SHW-8 Thermal/Weather Constraints**.

SHW-10 MEASUREMENT AND PAYMENT

These projects will be bid as a lump sum. The measurement and payment provisions from the City of Duluth Construction Standards and from the MN/DOT Standard Specifications for Construction will not be in effect with exception of the rock excavation measurement and payment provision found in **SHW-27 Rock Blasting and Vibration Control**.

SHW-11 (1201) PREQUALIFICATION OF BIDDERS

The provisions of MN/DOT 1201 are replaced with the following:

Duluth Energy Systems will require the following qualification information to be submitted with the Proposals:

A. Welding Procedure Specifications for welding on thin-walled steel pipe (WPS).
B. Procedure Qualification Records (PQR) corresponding to the submitted WPSs.
C. Certification of Qualification for a minimum of five welders for the submitted WPSs.
D. Coupon test results for each welder corresponding to each WPS.
E. Reference documentation attesting to past experience installing pre-insulated thin-wall steel piping systems. Such documentation shall include the name of the facility owner, location, date the work was performed, amount and size of pipe installed, and a contact name and phone number for verification purposes.
F. The Bidders shall be responsible for all costs related to qualifying for the work specified in the Construction Documents. Including, but not limited to, labor, materials, consumables, testing services, and documentation.

SHW-12 (1209) DELIVERY OF PROPOSALS

The provisions of MN/DOT 1209 and section 1209 of the City's Construction Standard are modified with the following:

The Bidder shall return paper copies of the following with the submitted Proposal:

A. The Bid Proposal on the form attached to the proposal package, with signatures and all Addenda acknowledged;
B. The Schedule of Prices with all changes made in ink and initialed, plus initials on all sheets of the exhibit;
C. Bid Guaranty (certified check, bank draft, government bond, or bid bond);
D. Responsible Contractor Certification forms;

SHW-13 (1404) MAINTENANCE OF TRAFFIC, (1707) PUBLIC SAFETY, AND (2563) TRAFFIC CONTROL

Phase 2 Contractor shall maintain one lane of traffic on Michigan Street at all times during construction. Contractor shall not store materials, soil spoil, or equipment in a manner that disturbs or disrupts traffic on the I-35 entrance ramp or on MNDOT right of way at any time.

SHW-14 (1507) UTILITY PROPERTY AND SERVICE

Contractor shall perform construction operations near utility properties in accordance with the provisions of MnDOT 1507, except as modified below:

All utilities related to this Project are classified as "Level D," unless the Plans specifically state otherwise. This utility quality level was determined according to the guidelines of CI/ASCE 38-02, entitled "Standard Guidelines for the Collection and Depiction of Existing Subsurface Utility Data."

The following utility owners have existing facilities which the work under this Contract may affect.

Centurylink	Charter
Minnesota Power	MnDOT
Duluth Energy	Northeast Service Cooperative
Compudyne	Zayo Bandwidth
Windstream	Paul Bunyan
Enventis	

Any relocation or adjustment of inplace utilities shall occur concurrently with the Contractor's work.

Any exposed utility or pipe shall be re-bedded in clean, compactible sand (or as required by the facility owner) by the Contractor and all such work shall be considered incidental.
Utility owners have facilities to remain that cross the work perpendicular to the proposed trench and must be supported during the work. The Contractor is responsible for protecting inplace utilities to remain and fully supporting the facilities during construction. All costs of coordinating the work in the vicinity of inplace utilities to remain including exposing, supporting, working around and backfill shall be considered incidental.

SHW-15 (1508) CONSTRUCTION STAKES, LINES, AND GRADES

The provisions of MN/DOT 1508 are supplemented with the following:

DULUTH ENERGY SYSTEM'S RESPONSIBILITIES

Duluth Energy System shall provide the following information to the CONTRACTOR for the purposes of field engineering:

A. Digital copy of AutoCAD and/or Autodesk Civil 3D design data detailing all alignment and grade information for the Work.

B. Where identified in the plan drawings, digital reference of benchmarks to be utilized for layout of the Work.

All data will be transmitted through either e-mail, coping of information onto a flash drive, or by posting the information on an FTP site with access granted to the CONTRACTOR.

CONTRACTOR'S RESPONSIBILITIES

The CONTRACTOR shall provide field engineering and surveyed construction as-built record documentation for completion of the Work including, but not limited to:

A. Establishing and maintaining all controls, lines, and levels for the Work.

B. Contractor shall contact John Maruska, City of Duluth GIS technician at 218-576-4821 to maintain record GPS coordinates on the HW pipe location within the City of Duluth's GIS system.

C. Providing record documentation and as-built documentation as detailed in **SHW-17 Acceptance**.

D. Employ a Registered Professional Land Surveyor to replace any monuments, property corners, or reference points moved or destroyed in the course of performing the Work.

E. Verify existing conditions and dimensions indicated in the plan drawings are correct. The CONTRACTOR shall notify Duluth Energy System in writing of any discrepancies in the existing conditions that may impact the construction of the Work.

F. Lay out building foundations, column locations, and floor elevations for all building service entries. CONTRACTOR shall verify the elevations as proposed in the plan drawings are correct through non-destructive means.

G. Provide and maintain onsite for the Duluth Energy System's review a complete and accurate log of control and survey information for the Work. This log shall contain benchmark information and control points utilized for laying out the Work, and shall be submitted to the Duluth Energy Systems.

SHW-16 SUBMITTALS

The Contractor shall provide shop drawings of all materials to be furnished for approval by the Engineer before being delivered to the site. All materials shall comply with the City of Duluth, Minnesota Public Works & Utilities Department – Engineering Division Standard Construction Specifications 2017 Edition. Shop drawings for any materials proposed for approval as a substitute shall be submitted to the Engineer for approval prior to the scheduled start of construction. The required submittals should include, but it not necessarily limited to:

1. Construction Schedule
2. Traffic Control Plan
3. Schedule of Values
4. Inspection and Testing Plan
5. Welding Procedure Specification; Procedure Qualification Record; and Welder Certifications
6. Tracer Wire

7. PVC Conduit, Handholes, and Fiber-optic Cable

SHW-17 (1516) ACCEPTANCE

The provisions of MN/DOT 1516.3 shall be supplemented by the following:

CONTRACTOR'S CLOSE-OUT SUBMITTALS

When Duluth Energy System has determined that the Work is acceptable under the Contract Documents and the Contract fully performed, CONTRACTOR shall prepare and submit the following related to the Hot Water Pipe:

A. Project Record Documents.

1. Maintain at Project Site for Duluth Energy System one (1) copy of Record Documents including Plans, Specifications, Addenda, Bulletins, Change Orders, and other Modifications to the Contract, plus Field Directives or other written instructions, reviewed submittals, and test reports to record actual construction conditions.
2. Format for Record Documents
   i. Project Manual and other information provided on 8 ½" x 11" or 11" x 17" paper, bound in a three-ring binder identified on the exterior with Project name.
      a. Legibly mark to record actual construction including manufacturers and catalog numbers used; suppliers of each product; and revisions to execution procedures.
      b. Include Addenda, Change Orders, and other modifications.
3. Availability of As-Bid Project Data
   i. Duluth Energy System will provide the CONTRACTOR with copies of construction plans in Autodesk Civil3D format at this size and scale to facilitate the surveying process as required in **SHW-15 Construction Stakes, Lines, and Grades**.

B. As Built Survey and Record Documents

1. All Project Work of the Duluth Energy System's facilities (including piping, communication system equipment, heating conversion or connection interfaces) shall have as-built survey points and red-line drawings provided.
2. As-built red-lines shall be submitted on 8 ½" x 11" or 11" x 17" plan sheets and shall include notes on both plan and profile views.
3. Data submitted as part of the survey points files shall consist of the following:
   i. Data points shall be submitted in a points file (*.txt, *.csv, or other approved points file that is compatible with Autodesk Civil3D formatting), and shall include survey point numbers, northings, eastings, elevations, and a description of what is being surveyed (top of pipe, weld, bend, valve, handhole, etc.).

ii. The survey should be conducted using northing and easting in an accepted coordinate system on all pipes at tie-in, bends, tees, valves, weld caps, service entries, etc.

iii. The survey shall be conducted along the centerline of the piping **at all welds.**

iv. On all valves, it needs to be noted whether the northing and easting were taken on the center of the valve (body), or the top nut of the valve operator (which can be offset from the valve on larger pipe sizes).

v. Survey accuracy shall be to the nearest 0.01' for elevations, and to the nearest 0.1' for horizontal locations.

vi. Survey points for the following appurtenances shall be included as part of this project records documentation:

    a. Valves (including mainline valves, vent valves, drain valves, bypass fill valves, recirculation valves, and hot-tap valves);

    b. Piping (including mainline, service line, piping leading to or from valves previously listed, and piping leading from vent standpipes or drain structures);

    c. Fittings (bends, tees, weld caps, startup compensators, steel/HDPE transition fittings, flanges, etc.);

    d. Vent standpipes;

    e. Drain structures;

    f. HS-25 Slabs for shallow piping;

    g. Communication conduit (outside the external limits of parallel piping); and

    h. Handhole boxes

vii. Survey points shall be taken at the location of **every weld** and depict the elevation and horizontal location of each weld.

    a. Survey of weld locations for hot water pipe should be taken at the top of pipe above the weld at the height of the HDPE Jacket or Sleeve.

viii. Survey points shall be taken of the surface adjacent to the excavation at a maximum of 25' intervals. Specific survey shots shall be taken at any surface grade changes (curbs, driveways, etc.) and specifically noted.

ix. Survey points shall be taken of all building corners (one shot at the corner, and one shot on each perpendicular wall) within or adjacent to the work site for record drawing use.

x. All facilities installed as part of the Work that cross the Duluth Energy's facilities within a three (3) foot vertical clearance, and facilities that run parallel to the Duluth Energy's facilities within a 5' horizontal clearance shall

be surveyed (minimum of two locations for pipes to show all horizontal and vertical alignments), and included on the survey point data.

xi. For existing subsurface facilities, utilities, or obstructions, all horizontal and vertical locations of such items that cross or run parallel with the Duluth Energy System's facilities that have been exposed due to the excavation shall be surveyed (minimum of two locations for pipes to show all horizontal and vertical alignments). This includes showing the location of:

a. Structural foundations or footings

b. Grade beams

c. Storm sewer

d. Water main

e. Sanitary sewer

f. Utility Manholes and Vaults

g. Valve stems

h. Light, signal, and overhead catenary pole bases

i. Electrical, fiber optic, telephone cables, gas pipes

j. Any other facilities encountered as directed by RPR.

The excavating CONTRACTOR will need to identify to the surveyor the utilities that have been exposed below the Duluth Energy's facilities that may be in the trench bedding or hidden from sight.

xii. Survey any changes to surface features such as adjacent curbs, sidewalks, buildings, and other physical construction that is modified from the as-bid construction documents.

4. In addition to the survey points file, the following supplemental information shall be provided in the form of red-line drawings to identify survey points and deviations from the Plans:

i. Approximate location of survey points.

ii. Isometric sketches of all pipe installations (may be combined with radiography/weld location sketch).

iii. Notation of modifications to the Conduit and Handhole layout.

5. It is the responsibility of the CONTRACTOR to ensure that they secure all of the necessary data and information to prepare and submit an accurate representation of the work completed in the field. Failure to secure required data prior to the concealment of the work may result in the re-excavation and surveying of the required components at the CONTRACTOR'S expense.

The CONTRACTOR shall obtain verification of survey being performed from Duluth Energy System through signature or initials on an approved HWP Inspection and Testing Plan. ***Duluth Energy System may halt pipe backfilling***

work around the Duluth Energy System's facilities at any time if it is known that the requisite survey has not taken place.

6. Submission and Approval Process

   i. The CONTRACTOR shall provide the red-lined plan to Duluth Energy System within one month of the substantial completion of each Phase of the Work. Following submittal, Duluth Energy System will provide a response to the CONTRACTOR within one month that shall include either an approval of the submittal or a request for correction and/or additional information with respect to the data required. Upon request for correction, the CONTRACTOR shall have two weeks (14 days) to make corrections and return to Duluth Energy System for review.

   ii. The CONTRACTOR shall provide all survey point data in the form of a flash drive, e-mail attachment, or other electronic media device to Duluth Energy System within 10 days of the survey being completed for Phase of the Work.

   iii. Duluth Energy System's receipt of Project Record Documents, including drawings, shall not be a waiver of any deviations from the Contract.

SHW-18 (1603) MATERIALS: SPECIFICATIONS, SAMPLES, TESTS, AND ACCEPTANCE

The provisions of MN/DOT 1603 are appended with the following:

MANUFACTURERS INSTRUCTIONS

A. Where Contract Documents require that installation of Work shall comply with manufacturer's printed instructions, **obtain and distribute copies of such instructions to parties involved in the installation**. Submit two (2) copies to Duluth Energy System. Maintain one (1) set of complete instructions at the Project Site during installation and until Final Completion.

   1. Copies of manufactures printed instructions, where provided, will accompany material being used for construction. The CONTRACTOR shall verify that the necessary manufacturer's documents are received at the time material is transferred from the Duluth Energy System's storage facility.

B. Handle, install, connect, clean, condition, and adjust products in accordance with such instructions and in conformity with Specifications. If Project conditions or Specifications conflict with manufacturer's instructions, consult with the Engineer for direction. Do not proceed with Work without clear instructions.

C. Perform Work in accordance with manufacturer's instructions. Do not omit any preparatory step or installation procedure unless expressly modified or exempted by Contract Documents.

D. Should a conflict exist between the Contract Documents and the Manufacturer's instructions, consult with Engineer for direction.

TRANSPORTATION AND HANDLING

A. Hot Water Pipe and appurtenant materials for construction of the items shown in the Plans have been purchased by Duluth Energy System, and will be stored at a location

provided by Duluth Energy System for the materials. The CONTRACTOR shall be responsible for transport of the necessary materials to the project site.

B. Arrange pick-up and delivery of products in accordance with construction schedules, and between the hours of 7:00 a.m. and 3:00 p.m., Monday through Friday. Should the CONTRACTOR need to obtain materials outside of these hours or on a Saturday, they shall provide Duluth Energy System a minimum of 24-hour notice. The CONTRACTOR shall not be allowed access to Duluth Energy System's storage location on a Sunday for any reason.

1. At time of pickup, a Duluth Energy System's representatives will complete and sign a *Materials Transfer Record* (see Appendix A). The CONTRACTOR shall review the Materials Transfer Record and sign it at the time material is picked up. No material provided by Duluth Energy System may be transferred to the CONTRACTOR without a Materials Transfer Record document being filled out and signed.
2. Deliver products in undamaged condition, in manufacturer's original containers or packaging, and with identifying labels intact and legible.
3. Immediately upon delivery, inspect shipments to ensure compliance with requirements of Contract Documents and approved submittals, and to ensure that products are properly protected and undamaged.

C. The CONTRACTOR shall be responsible for providing all equipment and sufficient personnel to handle products at time of pickup, delivery, and onsite storage.

D. The CONTRACTOR shall handle, haul, and distribute all materials and all surplus materials on the different portions of the Work, as necessary or required and shall be responsible for the protection, loss of, or damage to materials and equipment furnished by the CONTRACTOR or others until Final Completion and acceptance of the Work. CONTRACTOR and all subcontractors are responsible for all damaged items caused by their respective employees and agents (including subcontractors) and shall replace all such damaged items without additional cost to OWNER.

E. The CONTRACTOR shall deliver all surplus materials to the Duluth Energy System's storage facility at no additional cost at the completion of the Work.

F. The CONTRACTOR shall arrange with material suppliers and manufacturers for delivery and entry of equipment to the site at a suitable time. Inform appropriate parties of the size of access available for equipment so assembly of large units of equipment on site may be considered when they are being manufactured.

STORAGE AND PROTECTION

A. The CONTRACTOR is responsible for all costs of onsite storage and demurrage. Store products in accordance with manufacturer's instructions, with seals and labels intact and legible.

B. Store products subject to damage by the elements in weather-tight enclosures. Maintain temperature and humidity within the ranges required by manufacturer's instructions.

C. Exterior Storage: Store fabricated products above the ground, on blocking or skids, to prevent soiling or staining. Cover products that are subject to deterioration with impervious sheet coverings; provide adequate ventilation to avoid condensation.

D. Provide substantial coverings to protect installed products from damage from traffic and subsequent construction operations. Remove when no longer needed.

E. The CONTRACTOR is responsible for damaged items and shall replace such damaged items at no expense to OWNER.

1. Spare Materials for uncommonly used items such as hot water pipe, valve assemblies and fittings are not available from local vendors. Duluth Energy System orders materials well in advance of project commencement, and manufacture and delivery of such materials may take upwards of 16 weeks. ***It is imperative that the CONTRACTOR handle such materials in a manner to prevent damage.***

2. Hot water piping materials ***<u>are not available from local vendors</u>***. Duluth Energy System does not maintain select hot water pipe and fittings, nor additional hot water insulation kits and pipe ordered specifically for the Work. The CONTRACTOR will be required to purchase material requiring replacement from the Manufacturer for material damaged by the CONTRACTOR during the course of transport or installation.

F. All materials and equipment to be incorporated in the Work shall be placed so as not to injure any part of the Work or existing facilities and so that free access can be had at all times to all parts of the Work and to all public utility installations in the vicinity of the Work. Materials and equipment shall be kept neatly piled and compactly stored in such locations as will cause a minimum of inconvenience to public travel and adjoining owners, tenants and occupants

SHW-19 (1605) SUBSTITUTE MATERIALS

The provisions of MN/DOT 1605 are supplemented with the following:

Specific manufacturers, materials, products, and equipment have been used in preparing the Contract Documents and thus establish minimum qualities for performance and appropriateness. Comply with specifications and reference standards as minimum requirements.

All bidders, contractors, suppliers, and manufacturers herein agree that, where a particular product or manufacturer is indicated, followed by a description of materials, special features, or performance criteria, the bidder, contractor, supplier, or manufacturer shall make all necessary modifications to their "Standard or Custom Products" to fully comply with the description of materials, special features, or performance criteria specified.

Submit to the Duluth Energy System a complete list of all subcontractors, suppliers, and products proposed to be used, with the name of the manufacturer and the installing subcontractor.

A. <u>Reference Standard Specifications</u>

Where products or materials are specified only by reference standard, provide any product meeting that standard. If the reference standard is followed by a description of

materials, special features, or performance criteria, make all necessary modifications to "Standard or Custom Products" to fully comply with the description of materials, special features, or performance criteria specified.

B. Descriptive Specifications

Where products, materials, or pieces of equipment are specified by indicating a detailed description of the required properties, minimum attributes, special features, or performance criteria required, provide any product meeting that description. If descriptive specification is followed by a list of specified manufacturers and/or specified products, select product from only those manufacturers and specified products.

1. If manufacturer's standard product is listed in the specification and does not comply with the minimum description indicated, make all necessary modifications to "Standard or Custom Products" to fully comply with the description of materials, special features, or performance criteria specified.
2. If a list of specified manufacturers includes the following statement "Comparable Products of Other Specified Manufacturers", then select product only from manufacturers listed in the Special Provisions complying with the minimum attributes, special features, or performance criteria.
3. If list of specified manufacturers includes the following statement, "Comparable Products of Other Manufacturers", then select product from any manufacturer and product complying with the minimum attributes, special features, or performance criteria.

C. Proprietary Specifications

Where the desired products, materials, or equipment are indicated by specific manufacturer's name, brand name, model number, type designation, or other unique characteristics, provide only products listed in these Special Provisions, the Plans, or Details.

1. Where indicated in the Special Provisions as "No Substitution", bids must be based on the specific named products only.
2. Other manufacturers, even if listed as acceptable, must comply with the minimum levels of material, detailing, and dimensional restrictions established for the proprietary product.

SHW-20 (1609) DEPARTMENT PROVIDED MATERIAL

The provisions of MN/DOT 1609 are appended with the following:

A summary of Duluth Energy System furnished materials and equipment is as follows:

A. Rigid pre-insulated hot water piping (40 foot standard length) and fittings (elbows, bends, tees)
B. Pre-insulated hot water pipe jointing insulation kits
C. Pre-insulated main line valves, valve assemblies, air vent valves, and drain valves
D. Covalence WPCT shrink wrap (or equal)
E. Fibrelite casting frames and lids

F. Communications handholes

The Contractor shall assume that items not included in the preceding list of materials shall be the responsibility of the Contractor to furnish, and shall be considered as incidental to the corresponding unit price bid items.

SHW-21 (1702) PERMITS, LICENSES, AND TAXES

Contractor shall obtain the MS4 Erosion and Sediment Control Permit from the City

It is Contractor's responsibility to ascertain, identify, and comply with all applicable rules, codes, regulations, standards, specifications, and laws in furnishing and performing the Work, including all requisite permit applications, and to ascertain the most current edition or version of such rules, codes, regulations, standards, specifications, and laws.

SHW-22 (1806) DETERMINATION AND EXTENSION OF CONTRACT TIME

The Contract Time will be determined in accordance with the provisions of MN/DOT 1806 and the following:

1. Construction Commencement

   Construction operations shall be started on or before the following dates for each Phase Contract or within ten (10) calendar days after the date of Notice to Proceed, whichever is later.

   A. Phase 1 – August 14, 2017 (Performed under a separate contract. Shown for coordination and clarification purposes only.)
   B. Phase 2 – September 5, 2017

2. Substantial Completion. The following substantial completion dates apply to the project.

   A. Phase 1—All work on Phase 1 shall be complete on or before September 30th, 2017. Substantial Completion shall be defined as hot water pipe completed and installed, ready for use, including but not limited to backfilled up to street subgrade. (Performed under a separate contract. Shown for coordination and clarification purposes only.)
   B. Phase 2—All work on Phase 2 shall be complete on or before October 31, 2017. Substantial Completion shall be defined as hot water pipe completed and installed, ready for use, including but not limited to backfilled up to grade, hydroseeding or erosion control measures complete in preparation for winter and pipe filled with nitrogen gas.

3. Final Completion. ALL work required under this Contract including final clean up shall be complete on or before October 31st, 2017.

4. The third exemption listed under the second paragraph of the provisions of MN/DOT 1806.3 is modified to the extent that the phrase "(3) During the inclusive period from November 15 through April 15, except as specified in 1806.1…" is deleted.

5. No work which will restrict or interfere with traffic shall be performed between 12:00 noon on the day preceding and 6:30 a.m. on the day following any consecutive combination of a Saturday, Sunday, and legal holiday without written permission from the Engineer.

   (A) If the Contractor chooses not to work at all on the day preceding the holiday period, no working day charges will be assessed.
   (B) If the Contractor chooses to work prior to 12:00 noon on the day preceding the holiday period or if the Contractor obtains written permission to work after 12:00 noon on the day preceding the holiday period, working day charges will be assessed only for the actual hours worked.

7. When all, or a portion, of the Contract Time is specified as a calendar completion date, the time is presumed to have been determined by considering the Proposal quantities, normal weather for the locality and season of the year, and the necessity of having the work completed by the specified date. The time may be extended by the Engineer only if the delay is considered "Excusable" in accordance with MN/DOT 1806.2 Types of Delays.

SHW-23 METERING COMMUNICATIONS SYSTEM

Furnish all labor, materials, equipment, and incidentals required to install communications conduit, handholes, fiber-optic cable, and appurtenances completed as shown in the Plans and as specified herein.

REFERENCES AND STANDARDS

Other than by reference, list references, standards and specifications are not contained in this Specification. Unless otherwise noted, the most current version of the standard or reference at the time of bid is applicable. Obtain, become familiar with and, where indicated or inferred, conform to the listed references and standards. References and standards are considered minimum requirements unless indicated otherwise. Any references to methods of measurement or payment in references and standards are not applicable. Tolerances in references and standards are applicable only if not indicated otherwise in this Specification. In event of conflict between the references or standards and this Specification, this Specification applies.

A. <u>American Society for Testing and Materials (ASTM):</u>

   1. ASTM D2321: Standard Practice for Underground Installation of Thermoplastic Pipe for Sewers and Other Gravity-Flow Applications
   2. ASTM D3034: Specification for Type PSM Poly (Vinyl Chloride) (PVC) Sewer Pipe and Fittings

B. <u>Underwriters Laboratories Inc. (UL):</u>

   1. UL 651 and 651A: Rigid PVC Conduit.

C. <u>National Electrical Manufacturers Association (NEMA):</u>

   1. NEMA TC-2: Electrical Plastic Conduit
   2. NEMA TC-250: Electrical Enclosures.

D. <u>National Electric Code (NEC)</u>

1. NEC 346

DEFINITIONS

Certain words and phrases, used throughout this Section, shall be understood to mean:

"Reviewed" - Any product or method of installation, applied in conformance with its manufacturer's recommendations submitted and returned by Duluth Energy System.

"Listed" - Methods and materials, listed by Underwriters Laboratories, for the specific application and bearing the “UL” label.

SUBMITTALS

The following submittals are required for portions of the Work specified in this Section.

A. <u>Product Data & Drawings</u>

Provide manufacturer's data and technical specifications on the following products. Marketing/sales literature is not acceptable.

1. Conduit and Fittings
2. Conduit Jointing Cement/Bonding Agent
3. Nylon Cord

REGULATORY REQUIREMENTS

A. Comply with local/regional rules governing earthwork operations.

B. Comply with OSHA Excavation Rules.

DELIVERY, STORAGE AND HANDLING

A. Store conduit and fittings to prevent damage by heat, sunlight, weight deflection, or other environmental conditions.

B. Protect ends of conduit materials, including fittings from damage prior to jointing.

PRODUCTS

A. <u>Materials And Products Not Specified</u>

Any materials or products required or implied to accomplish the Work indicated or inferred by the Plans and not specified in this Project Specification or on the Plans shall be furnished in conformance with the applicable local municipal utility practice or specifications.

B. <u>Conduit And Fittings</u>

1. Buried Conduit
   i. Rigid non-metallic conduit shall be PVC, Schedule 80 pipe.
      a. Conduit size shall be 2” diameter.
      b. Pipe shall be capable of being installed by direct bury, stitching, plowing, or trenching.
      c. Pipe shall be GREY in color.

d. Pipe shall be marked on the outside surface indicating the manufacturer's name, size of conduit, type of material, UL Listing, and any additional markings required by NEC requirements.

e. All connection to existing pipe shall consist of PVC pipe of the same diameter of the pipe being connected to. Conduit from existing pipe connection points shall remain PVC into the nearest handhole.

ii. Fittings shall be from the same manufacturer as the PVC or HDPE conduit, and be approved by the manufacturer for use on PVC or HDPE pipe as a leak-free connections.

iii. All bends along hot water pipe alignments shall consist of long-radius sweeps. Sweeps shall be shop or field-fabricated using heat and a forming method determined by the CONTRACTOR. All sweeps shall have a minimum bend radius of 60" (5'), regardless of conduit pipe size.

iv. Factory bends may be used in lieu of sweeps to bring conduit vertically up into handholes. The total measurement of all factory bends on a segment of conduit pipe between handholes <u>shall not exceed 360-degrees</u>. If the total measurement of all factory bends exceed 360-degrees, the CONTRACTOR shall utilize long-radius sweeps in place of factory bends as summarized above.

v. Factory bends shall have a minimum radius of 18".

vi. Non-metallic bell ends shall be installed on all ends of conduit pipe. Bell ends shall be sized appropriately for the non-metallic conduit being used for installation.

vii. Upon completion of installation, the CONTRACTOR shall install nylon pull string for each conduit run. The pull string shall be of sufficient strength to handle up to 1250 lbs of pull force.

2. Interior Conduit

i. Electrical Metallic Tubing (EMT) meeting or exceeding the following requirements shall be used for all interior communications conduits:

a. Conduit shall be mild, electrically welded, galvanized steel.

b. Listed and manufactured in accordance with UL Safety Standard 797 (UL797) and ANSI C80.3.

ii. All changes in direction shall be field constructed using an approved bending method

iii. All EMT fittings shall be constructed to meet or exceed UL Safety Standard 514B (UL514B)

iv. Upon completion of installation, the CONTRACTOR shall install nylon pull string for each conduit run. The pull string shall be of sufficient strength to handle up to 1250 lbs of pull force.

C. <u>Sealants And Waterproofing</u>

1. Sealants shall be gun grade, silicone type, similar to GE type RTV.

i. On existing foundation walls, waterproofing shall be membrane type or brushed-on, bituminous base product equal to, and compatible with existing waterproofing system.

2. Waterproofing of new foundation walls is described in **SHW-25 Concrete & Utility Structures**.

3. Firestop sealants shall be used wherever required by applicable codes and shall be intumescent style sealants.

   i. Approved Products:

      a. Hilti, FS-ONE Intumescent Firestop Sealant

      b. SpecSeal, Series LCI Intumescent Sealant

      c. Tremco, TREMstop 1A+ Intumescent Sealant

      d. Or equal as approved by Duluth Energy Systems.

D. Utility/Conduit Identification

1. The CONTRACTOR shall supply Buried Warning Tape: 6" wide polyethylene underground utility warning tape with legend and color as follows:

   "Caution Fiber Optic Cable Below" Orange

2. Acceptable Manufacturers and Products:

   i. "Warnoline" tape by Safety Sign Company, Cleveland, Ohio, 216-238-7721.

   ii. "Shieldtec" tape by Empire Level, Inc., Mukwonago, WI. ***www.empirelevel.com***, 1-800-872-8425.

   iii. Or equal as approved by Duluth Energy Systems.

EXECUTION

A. Examination

1. Examine the areas and conditions under which electrical construction and associated work is to be performed. Do not proceed with the Work until unsatisfactory conditions have been corrected.

B. Preparation

1. Coordinate all electrical work operations to protect existing and/or new concurrent construction.

C. Alignment And Grade

1. In general, communication conduits are placed above the hot water pipe lines, as indicated on the Plans. Where placed over separate routes, maintain alignment and grade as described in **SHW-28 Exterior Hot Water Pipes, Execution Section, Part 3**. Any deviations from the location of the conduit above the hot water lines shall be noted and included in the As-Built Documentation in accordance with **SHW-17 Acceptance**.

D. Conduit Laying And Jointing

1. Conduit Laying:
    i. Remove all foreign matter or dirt from inside of conduit before it is lowered into its position in trench.
    ii. Keep conduit interior and joints clean during and after laying.
    iii. Replace any defective or damaged conduit, or conduit with grade or alignment disturbed after laying.
    iv. At suspension of work, place suitable closures to prevent earth or water from entering conduit.
    v. Lay no conduit in water.
    vi. Construct deflections from a straight line or grade as required by vertical or horizontal bends with radii not less than 60" (5') as noted in these Special Provisions. Riser stubs shall be made with manufactured bends.
    vii. Lay conduit per ASTM D2321 and manufacturer's recommendations.
    viii. Permanently label all handholes and conduits in handholes. Permanent labeling shall be visibly seen on inside of handhole cover, and conduits. Conduits identify what location each conduit runs (building name or handhole), and whether it is conduit No. 1, No. 2, No. 3, etc. for that direction or alignment.
    ix. The conduits shall be installed within the limits of the hot water pipes and centered above the pipes, including bends and offset areas.
2. Conduit Jointing Requirements:
    i. Make all joints with specified or approved materials in accordance with recommendations of manufacturer.
    ii. Visually inspect all conduit joints for bonding and strength prior to backfill.
3. Building/Structure Penetrations:
    i. Make penetrations in strict accordance with indicated details.
    ii. Restore damaged waterproofing with products equal to and compatible with the existing systems.
    iii. Where required by applicable codes, construct fireproof barrier around penetrations by use of an intumescent firestop sealant, constructed to manufacturer's instructions.

E. <u>Handhole Placement</u>

1. Handhole box shall be installed flush with proposed and adjacent surfaces.
2. Handhole box location:
    i. The proposed location shall be verified by the CONTRACTOR and approved by Duluth Energy Systems.
    ii. Handhole boxes shall not be placed within or directly adjacent to pedestrian curb ramps.

iii. Handhole boxes shall be square with adjacent structures, buildings, sidewalks, etc.

iv. Location of handhole boxes shall be surveyed and included in As-Built Documents in accordance with **SHW-17 Acceptance**.

3. Document all changes that deviate from the detail sheets.

F. Backfilling And Identification Requirements

1. Backfilling is described in **SHW-24 Earthwork and Pipe Backfill**.

   i. Conform to ASTM D2321 when backfilling plastic pipe.

2. Buried conduit warning tape is described in this Specification.

3. Location of conduit where it deviates from that shown in the plans shall be included in the conduit drawing on the As-Built Documentation in accordance with **SHW-17 Acceptance**.

SHW-24 (2105) EARTHWORK AND PIPE BACKFILL

REFERENCES

A. Minnesota Department of Transportation Standard Specifications for Construction, 2016 Edition (MN/DOT), Section 2105 – Excavation and Embankment.

B. American Society for Testing and Materials (ASTM):

1. ASTM C33: Specification for Concrete Aggregates;

2. ASTM D422: Method for Particle Size Analysis of Soils;

3. ASTM D1556: Standard Test Method for Density and Unit Weight of Soil in Place by the Sand-Cone Method

4. ASTM D2922: Test Methods for Density of Soil and Soil-Aggregate in Place by Nuclear Methods (shallow depth);

5. ASTM D3017: Test Method for Moisture Content of Soil and Soil-Aggregate Mixtures;

6. ASTM D4318: Test Method for Liquid Limit, Plastic Limit, and Plasticity Index of Soils.

SUBMITTALS

Submit material qualification tests, field density test reports and other noted items directly from testing laboratory. The following Submittals are required for portions of the Work specified in this Section.

A. Materials Qualification Test

A submittal is required directly from a testing lab to indicate that a proposed soils material complies with Contract Document requirements.

1. Provide the following information and qualification tests for each specified soils material type, including on-site materials, prior to use on project.

   i. Source Location prior to delivery to site;

ii. Name of material and gradation analysis, ASTM D422;

iii. Liquid limit, plastic limit and plasticity index, ASTM D4318 (cohesive soils materials only, but not required for topsoil);

iv. Proctor density or relative density information according to test method identified in compaction requirements paragraph (not required for topsoil);

v. Constituent analysis (topsoil only).

2. This requirement applies to each new source of similar materials, for every 3,000 cubic yards of soils material taken from the same source, and at any time a visual difference in the material is observed by the Owner, its representatives, or Duluth Energy Systems.

B. Testing Reports

A Submittal which reports the result of the following required tests.

1. Field Density Tests

SITE CONDITIONS

A. The Hot Water portion of the Work is not designed to create an earthwork excavation and backfill balance.

1. Additional soils material needed for bedding or backfill of the hot water pipe shall be imported.

2. Unsuitable, unstable, and excess soils material generated by the Work shall be disposed off-site in a legal manner unless noted otherwise.

3. There will be no change in Contract amount or time as a result of importation or disposal of soils materials.

B. All grade subsidence or loss of soils material resulting from required construction activities is considered incidental to the Work. No additional payment will be considered for furnishing or placing any material required to achieve indicated design grades or subgrades.

C. Protect all excavation bottoms against freezing when the atmospheric temperature may be less than 35 degrees Fahrenheit during the excavation and open trench period.

PRODUCTS

A. Soils Materials

1. Unless otherwise indicated, all specified soils materials are assumed to be imported.

2. Pipe Bedding Material

i. The following MN/DOT approved granular materials are acceptable for use a pipe bedding material:

a. MN/DOT 3149.2H – Coarse Filter Aggregate

ii. For all materials used for pipe bedding material:

a. A **maximum of 10%** crushed stone and rock by volume shall be allowed for bedding all piping materials.

iii. No frozen material shall be utilized as pipe bedding material. Where necessary during installations where the air temperature is below freezing, the CONTRACTOR shall use heated aggregate materials for pipe bedding.

3. Pipe Zone Backfill Material

   i. The following MN/DOT approved granular materials are acceptable for use as pipe zone backfill material:

      a. MN/DOT 3149.2D.1 – Granular Backfill

   ii. For ***all materials*** used for pipe zone backfill:

      a. Recycled crushed concrete or bituminous ***shall not be allowed***.

      b. A **maximum of 10%** crushed stone and rock by volume shall be allowed for pipe zone backfill of all other piping materials.

   iii. No frozen material shall be utilized as pipe backfill material. Where necessary during installations where the air temperature is below freezing, the CONTRACTOR shall use heated aggregate materials for pipe backfill.

4. Structure (vaults, manholes, etc.) Backfill

   i. Material meeting the requirements of MN/DOT 3149.2D.2 – Structural Backfill

EXECUTION

A. Examination

1. Examine the areas and conditions under which backfilling is to be performed. Contact Duluth Energy Systems to verify all pipe bedding and backfill is acceptable. The CONTRACTOR shall not proceed with pipe installation until unsatisfactory conditions have been corrected, ***and acceptance by the Duluth Energy Systems Representative is obtained through signature or initials on an approved HWP Inspection and Testing Plan***.

2. Verify and assume full responsibility for adequacy of bearing and foundation conditions for all construction equipment utilized for excavation and pipe and structure placement.

3. Footing/Foundation Subgrade

   i. Coordinate observation by Duluth Energy Systems of footing/foundation subgrade prior to associated concrete placement and comply with required corrective procedures to obtain satisfactory subgrade.

   ii. Provide documentation to Duluth Energy Systems indicating that subgrades meet or exceed design bearing values shown on plans.

B. Site Water Control & Dewatering

1. ***Do not allow*** groundwater, surface water or direct precipitation to accumulate in excavations or on exposed subgrades.

   i. Hot water piping insulation is particularly susceptible to damage from excessive water. ***Trenches must be maintained free from standing water at all times.***

ii. Remove water to prevent softening of foundation bottoms, undercutting footings, and soil changes detrimental to stability of subgrades and foundations.

iii. Provide and maintain pumps, sumps, suction and discharge lines, and other dewatering system components necessary to convey water away from excavations. Establish systems to ensure water is removed during non-construction periods.

2. ***Failure to adequately maintain a trench free of water will result in the rejection of the pipe installation at the discretion of Duluth Energy Systems, with no additional compensation provided to the CONTRACTOR. Replacement of any and all pipe rejected as a result of the Contractor's failure to maintain adequate trench drainage or dewatering shall be the responsibility of the Contractor. This shall include, but not be limited to, excavation, removal of previously installed components, purchase of replacement piping, fittings, valves, joint kits, etc., welding, insulating, jacketing, and backfilling of the replacement piping.***

C. Excavation And Rough Grading

1. Unless agreed to be extra work by Duluth Energy Systems, all excavation for the hot water piping installation shall be included in the Work and will not be subject to a Contract price adjustment, including stone/rock foundation wall removal and with the exception of rock/bedrock excavation.

2. Excavate to a depth and limits required for construction of hot water piping, valves, fittings, and structures.

3. Remove unsuitable and unstable materials in accordance with this Specification.

4. Excavate and grade to elevations and dimensions shown in the Plans within a tolerance of 0.10' (+/-) for pipe installation, and 0.05' (+/-) for footing/foundation installations.

   i. Once elevations are set, take care not to disturb the bottom of the excavation prior to pipe or concrete installation.

   ii. Excavations under joint locations, "bell holes", for welding, insulation, and jacketing will only be allowed where welding, insulation, and HDPE jacket jointing are not feasible outside of the trench or with pipe on cribbing. Where permitted, bell holes shall be constructed to provide approximately 1' of space below the pipe and long enough to permit proper welding of pipes, insulation, and HDPE jacket jointing.

   iii. The Contractor may choose to excavate the entire trench to a depth that allows workers to work under the pipe at its own risk, and no additional compensation for extra excavation or pipe bedding material will be provided.

5. Extend excavation limits a sufficient distance from footings and foundations to permit placing and removal of trench boxes, concrete form work, and other required construction and inspection tools.

6. For rock excavation and foundation wall removal areas, level all areas for pipe or footing foundations on rough or sloping rock planes.

7. CONTRACTOR shall coordinate work with the OWNER's environmental consultant for the testing of any soil that is suspected or appears to be contaminated. Any contaminated soil encountered will be paid for by the OWNER for an agreed to unit price by Change Order.

D. Backfill Construction Prerequisites

1. Backfill excavations and construct fills as promptly as work permits, but not until completion of the following activities:

   i. Testing and approval from Independent Testing Laboratory of all imported or select on-site fill materials;

   ii. Acceptance of construction below finish grade;

   iii. Inspection, testing, approval, and recording of locations of underground utilities;

   iv. Removal of concrete form work;

   v. Removal of shoring and bracing, and backfilling of voids with satisfactory materials;

   vi. Completion of waterproofing or damp-proofing, if required;

   vii. Removal of trash and debris;

   viii. Completion of permanent lateral bracing of foundations walls;

   ix. Testing and acceptance Independent Testing Laboratory of subgrades to receive fill, subbase or base course.

   x. All requisite pipe testing has occurred in accordance with **SHW-28 Exterior Hot Water Pipe**.

E. Compaction Requirements

1. Compact Pipe Bedding and Pipe Backfill materials according to the requirements of the "Specified Density Compaction" method as detailed in MN/DOT Section 2105 – Excavation and Embankment, Part 2105.3F and 2105.3F.1. The minimum sampling and testing for compaction shall be in accordance with the requirements found within the City of Duluth Construction Standards.

2. *Penetration Index (PI) testing shall not be performed on Pipe Backfill Material for hot water piping.*

3. The Contractor may request for compaction of Pipe Bedding Material to be performed under the provisions of MN/DOT 2105.3F.2 for the Quality Compaction Method. Such a request must be made in writing and approved by both the City of Duluth and Duluth Energy Systems. The City or Duluth Energy Systems reserve the right to request additional testing as provided for in the MN/DOT Grading and Base Manual to assist with visual inspection. These tests, where required, shall be performed at the expense of the CONTRACTOR.

4. Provide Duluth Energy Systems with testing results on the hot water bedding and backfill material (gradation analysis and proctor results) as part of the Project Submittals.

F. Filling And Backfilling

1. Support walls laterally as required to prevent displacement and protect waterproofing, insulation, and all underground piping utilities and structures.
2. Do not place fill on unsuitable material as defined, insufficiently compacted material, snow, ice, mud, or frozen material.
3. Do not operate heavy equipment closer to walls than a distance equal to height of backfill above bottom of footing. Do not operate tampers within six inches (6”) of pipe.
4. Commence filling at lowest portion of structure or backfill area.
5. Advance first lift of fill material in front of hauling and spreading equipment with that equipment traveling on the lift to avoid disturbance of sensitive subgrade soils or damage to the pipe.
6. Fill uniformly in horizontal layers, over approved subgrade.
    i. For compaction areas using heavy equipment, provide successive lifts of 9" maximum loose thickness.
    ii. For compaction areas using light weight equipment (e.g. "whacker"), use maximum loose thickness of 4".
7. Moisten or dry material(s) by selected methods to maintain moisture content per ASTM D3017 within 3 percent of optimum when placing and compacting to specified density.
    i. Provide water required to obtain optimum moisture content of materials to obtain specified density.
8. If there is a break in the continuity of filling operations in an area, scarify top 6" and compact constructed subgrade to same minimum percentage of maximum density as layer of new work immediately above subgrade before continuing fill operations.
9. Provide testing of each successive lift in conformance with compaction requirement paragraph.
10. Scarify, remove, recompact, or otherwise rectify all soft or yielding areas resulting from CONTRACTOR'S operations, rain, or other forces and test before new fill or construction is placed.
11. Maintain previously compacted material and recompact and fill as necessary to keep fill or subgrade to specified density and elevations.

G. Field Density Tests:

1. The City of Duluth, or its contracted third party testing company, shall perform compaction testing for Quality Control purposes. The Contractor shall coordinate and cooperate with the City to provide appropriate notification and access to perform the testing in the location specified.
2. Contractor shall excavate any areas of failing compaction tests, and replace at near optimum moisture, re-compact and retest all areas failing to meet compaction requirements at no additional cost to the Owner or Duluth Energy Systems.

MEASUREMENT AND PAYMENT

A. All costs of excavating to foundation grade, dewatering, preparing the foundation, furnishing and installing bedding materials, placing and compacting backfill materials, and other work necessary for prosecution and completion of the work as specified, shall be included for payment as part of the work without any direct compensation being made therefore.

1. No payment will be made for structure excavation or trench excavation of flash chamber or valve box structures. All costs for excavation, foundation preparation, dewatering, and separating unacceptable materials shall be considered incidental to relevant Contract bid items.

SHW-25 (2506) CONCRETE & UTILITY STRUCTURES

GENERAL

A. Summary

1. The CONTRACTOR, and/or a manufacturer selected by the CONTRACTOR and approved by Duluth Energy Systems, shall furnish all labor, materials, equipment, and incidentals required to construct concrete structures, structural slabs, and concrete wall penetrations in accordance with the Plans and these Specifications.

B. References and Standards

1. Other than by reference, listed references, standards and specifications are not contained in this Specification. Unless otherwise noted, the most current version of the standard or reference is applicable. Obtain, become familiar with and, where indicated or inferred, conform to the listed references and standards. References and standards are considered minimum requirements unless indicated otherwise. Any references to methods of measurement or payment in references and standards are not applicable. Tolerances in references and standards are applicable only if not indicated otherwise in this Specification. In event of conflict between the references or standards and this Specification, this Specification applies.

   i. Minnesota Department of Transportation Standard Specifications (MN/DOT)

      a. Section 2461 – Structural Concrete

      b. Section 2506 – Manholes and Catch Basins

   ii. American Society for Testing and Materials (ASTM):

      a. ASTM A123 – Standard Specification for Zinc (Hot-Dip Galvanized) Coatings on Iron and Steel Products

      b. ASTM A153 – Standard Specification for Zinc Coating (Hot-Dip) on Iron and Steel Hardware

      c. ASTM A307 – Standard Specification for Carbon Steel Bolts and Studs, 60 000 PSI Tensile Strength

      d. ASTM C150 – Standard Specification for Portland Cement

      e. ASTM C270 – Standard Specification for Mortar for Unit Masonry

f. ASTM C443 – Standard Specification for Joints for Concrete Pipe and Manholes, Using Rubber Gaskets

g. ASTM C476 – Standard Specification for Grout for Masonry

h. ASTM C478 – Standard Specification for Precast Reinforced Concrete Manhole Sections

i. ASTM C857 – Standard Practice for Minimum Structural Design Loading for Underground Precast Concrete Utility Structures

j. ASTM C858 – Standard Specification for Underground Precast Concrete Utility Structures

k. ASTM C990 – Standard Specification for Joints for Concrete Pipe, Manholes, and Precast Box Sections Using Preformed Flexible Joint Sealants

l. ASTM C1384 – Standard Specification for Admixtures for Masonry Mortars

m. ASTM C1677 – Standard Specification for Joints for Concrete Box, Using Rubber Gaskets

n. ASTM D7088 – Standard Practice for Resistance to Hydrostatic Pressure for Coatings Used in Below Grade Applications Applied to Masonry

C. <u>Submittals</u>

1. The CONTRACTOR shall be required to provide the following shop drawings to Duluth Energy Systems for review and acceptance prior to constructing any precast or cast-in-place concrete utility structure. Shop drawings will be required for the following types of structures, where applicable:

   i. Flash Chambers

   ii. Valve Chambers

2. The CONTRACTOR shall anticipate up to 10 working days upon receipt of a submittal for Duluth Energy Systems to review shop drawings. Shop drawings will be reviewed, redlined, and returned to the CONTRACTOR with one of the following notes:

   i. Reviewed → Reviewed for general conformance with the Contract Documents. No resubmittal is necessary.

   ii. Reviewed as Noted → Reviewed for general conformance with the Contract Documents. Notes are included for the CONTRACTOR'S benefit. No resubmittal is necessary.

   iii. Revise and Resubmit → Reviewed for general conformance and found to be outside the provisions of the Contract Documents. Resubmittal is necessary.

   iv. Rejected → Reviewed for general conformance and found to be outside the provisions of the Contract Documents. A "Rejected" item does not meet multiple portions of the Contract Documents, and will generally be accompanied with an explanation of why a rejection was provided.

3. Any precast or cast-in-place concrete utility structures constructed partially or in its entirety prior to the submittal and subsequent review of shop drawings may be

rejected at the discretion of Duluth Energy Systems, and shall be replaced by the CONTRACTOR with no additional compensation.

4. The CONTRACTOR shall submit all concrete mix designs used for cast-in-place structures to Duluth Energy Systems for approval.

PRODUCTS

A. Structures

1. The CONTRACTOR shall furnish and install all necessary materials required to construct sub-base, footings, install filter fabric, drain rock, and drain pipes to the storm sewer as specified in the plans. Structures shall be assembled in accordance with the structure manufacturer's recommendations.
2. Precast and cast-in-place structures shall conform to the dimension requirements as outlined in the Plans and the following:
   i. Be designed by a Professional Engineer licensed in the State of Minnesota to have wall, floor, and top slabs able to sustain an HS-25 loading.
   ii. Precast sections shall have tongue and groove or ship-lap joints with a butyl mastic sealant conforming to ASTM C990.
   iii. Cement used for concrete utility structures shall be Type IIA (air-entrained) or Type IIIA (air-entrained high-early strength) Portland cement conforming to ASTM C150 or equal as approved by Duluth Energy Systems.
   iv. All sections shall be cured by an approved method. Precast sections shall not be shipped until the concrete has attained a compressive strength of 4,000 psi or until 5 days after fabrication and/or repair, whichever is longer.
   v. The requirements for Grade B concrete as defined in MN/DOT Section 2461 shall be met where higher grade concrete is not specified in the Plans.
   vi. Forms for cast-in-place structures shall not be removed until the concrete has reached a minimum compressive strength of 2,500 psi.
   vii. Brick or masonry used to build any walls or provided for infill of pipe openings shall conform to ASTM C150.

B. Standpipes

The CONTRACTOR shall be responsible for furnishing and installing standpipes to final roadway grade. All standpipes shall be Schedule 80 PVC or equal as approved by Duluth Energy Systems.

C. Castings and Adjustment Rings

Duluth Energy Systems shall furnish castings to the Contractor for installation of all castings for valve access structures. Contractor shall be responsible for providing all adjustment rings necessary to bring the castings to final roadway grade.

1. Approved Manufacturers: Fibrelite

D. Sealing & Waterproofing

For all structures, the CONTRACTOR shall be required to complete sealing of the structure, pipe "knockouts", and any joints using the following approved materials:

1. Mortar Mix: One part Type 1, ASTM C150, cement by volume and three (3) parts clean, sharp sand by volume.
2. Non-Shrink Grout: Pour Rok®, Embeco® 636, or approved equal.
3. Water Sealing Material: SikaSet® Plug, or approved equal.
4. Joint Sealing Material: All precast concrete joints shall be sealed with a butyl rubber joint seal, "O-ring", or ram neck installed to ensure a waterproof seal along the entire length of a joint.

E. Structural Slabs

1. The CONTRACTOR shall be responsible for furnishing and installing all structural slabs (HS-25) shown in the Plans. The CONTRACTOR shall furnish and install all necessary materials required to construct the HS-25 or H20 slabs as shown in the Plans and details.
2. The location and approximate size of permanent HS-25 slabs are noted in the Plans. If the CONTRACTOR chooses to sequence the work in a manner that would place either construction haul roads or traffic above the Duluth Energy Systems's facilities with less than one (1) foot of cover for any amount of time, the CONTRACTOR shall be responsible for installing an H25 slab above the facility as a method of protecting the facility *with no additional compensation*. The exception to this cover requirement would be for the explicit installation of roadway subgrade, curb, gutter, and pavement installation directly above the Duluth Energy Systems's facilities. The CONTRACTOR may chose an alternative method for "bridging" over existing facilities ("blistering", steel plates, precast concrete slabs, etc.), and may submit any proposed method to bridge the pipe in lieu of an HS-25 to Duluth Energy Systems for review and approval.
3. Where applicable, the Plan details show concrete slabs to be installed above valve locations where castings are to be installed. These slabs may vary in size per the details. Standpipes, castings and concrete slabs shall be furnished and installed per the requirements of this Specification.
4. Where the structural slabs are located within the concrete pavement section, the structural slabs shall be constructed from concrete meeting the requirements of the concrete pavement.
5. Where the structural slabs are located outside of the concrete pavement section, the structural slabs shall be constructed from concrete meeting the following:
   i. Cement used for concrete structural slabs shall be Type IIA (air-entrained) or Type IIIA (air-entrained high-early strength) Portland cement conforming to ASTM C150 or equal as approved by Duluth Energy Systems.
   ii. Concrete structural slabs shall meet the requirements of Grade B or higher as outlined in MN/DOT 2461.

iii. The concrete mix design for concrete structural slabs shall be MN/DOT mix number 3Y40, or as approved by the ENGINEER.

6. Traffic shall not be allowed onto HS-25 slabs until the compressive strength of the concrete reaches a minimum of 3,000 psi.

F. Building Wall Penetrations

1. All concrete and masonry wall openings for hot water pipe, sleeves, casings, or conduit pipe shall be sealed with the following:

   i. Non-Shrink Grout: Pour Rok®, Embeco® 636, or approved equal.

   ii. Water Sealing Material: SikaSet® Plug, or approved equal.

   iii. Exterior Waterproofing: All building wall penetrations shall be sealed with an bitumastic sealant approved by Duluth Energy Systems for use on foundation walls. Approved sealants are:

      a. BASF MasterSeal HLM 5000

      b. RoofWorks Fibered Roof and Foundation Coating

      c. SealMaster Fibered Roof and Foundation Coating

      d. Gardner 0405-GA Fibered Roof & Foundation Coating

      e. APOC 202 Fibered Roof & Foundation Coating

      f. Or approved equal

2. All porous stone foundation wall openings for hot water pipe, sleeves, casings, or conduit pipe shall be covered with Portland Cement, troweled to a smooth finish, then sealed with the following:

   i. Water Sealing Material: SikaSet® Plug, or approved equal.

   ii. Exterior Waterproofing: All building wall penetrations shall be sealed with a bitumastic sealant approved by Duluth Energy Systems for use on foundation walls. Approved sealants are:

      a. BASF MasterSeal HLM 5000

      b. RoofWorks Fibered Roof and Foundation Coating

      c. SealMaster Fibered Roof and Foundation Coating

      d. Gardner 0405-GA Fibered Roof & Foundation Coating

      e. APOC 202 Fibered Roof & Foundation Coating

      f. Or approved equal

EXECUTION

A. Utility Structure Construction Requirements

1. General Requirements

   i. Conform to the requirements of **SHW-24 Earthwork and Pipe Backfill** for subgrade preparation. Placement on natural grade is preferred, if stable.

ii. Allow poured-in-place concrete footings and floor slabs to reach a strength of 3,500 psi before continuing structure construction.

iii. Provide continuous performed butyl rubber joint seal as specified in all horizontal joints of precast structures.

a. Install in accordance with manufacturer's recommendations.

b. Butt ends together and do not overlap material.

c. Leave protective paper in place during application and handling; remove just prior to coupling.

2. Storm Sewer Connections

The CONTRACTOR shall core drill into storm sewer to make the final drain connection, and in all instances close and seal all openings around the outside of the pipe in precast structures in accordance with these Special Provisions.

3. Sanitary Sewer Connections

The CONTRACTOR shall core drill into storm sewer to make the final drain connection, and in all instances close and seal all openings around the outside of the pipe in precast structures in accordance City of Duluth Standards.

4. Exterior Waterproofing Systems

i. Prior to backfilling structures and wall penetrations, install all exterior waterproofing seals and membranes.

ii. Waterproofing seals and membranes on flash chamber structures shall extend 24” in each direction from the pipe penetrations or to the corners of the structures, whichever is greater.

iii. Waterproofing must be left visible for the Duluth Energy Systems to inspect prior to backfilling.

iv. Backfilling around waterproofing prior to Duluth Energy Systems’s inspection may be grounds for rejection of work and re-excavation for inspection at the CONTRACTOR’S expense.

B. Quality Assurance

1. All concrete included into the Work for the hot water system shall be tested in accordance with City of Duluth Construction Standards.

SHW-26 (2451) EXCAVATION, BACKFILL AND COMPACTION FOR UTILITIES

This section is replaced by **SHW-24 Earthwork and Pipe Backfill**.

SHW-27 (2105/2451) ROCK BLASTING AND VIBRATION CONTROL

MEASUREMENT AND PAYMENT

A. Bid Items, "Rock Excavation", shall be measured by the cubic yard. The quantity will be determined daily in the field with the RPR and the Contractor's foreman, using the Method of Measurement set for in MnDOT Specification Section 2105.4A.

SHW-28 (2508) EXTERIOR HOT WATER PIPE

GENERAL

A. Summary

1. Install pre-fabricated, pre-insulated district energy heating pipes as indicated on the Plans and as herein specified. The district energy heating pipes will carry hot water under pressure in a district energy network and includes an alarm wire moisture detection system.
2. Pre-insulated piping materials will be furnished by Duluth Energy Systems. See **SHW-20 Department Provided Materials**.

B. References And Standards

1. Other than by reference, listed references, standards and specifications are not contained in this Specification. Unless otherwise noted, the most current version of the standard or reference is applicable. Obtain, become familiar with and, where indicated or inferred, conform to the listed references and standards. References and standards are considered minimum requirements unless indicated otherwise. Any references to methods of measurement or payment in references and standards are not applicable. Tolerances in references and standards are applicable only if not indicated otherwise in this Specification. In event of conflict between the references or standards and this Specification, this Specification applies.
   i. American Society for Testing and Materials (ASTM):
      a. ASTM A36: Specification for Structural Steel;
      b. ASTM A53: Specification for Pipe, Steel, Black and Hot-Dipped, Zinc Coated Welded and Seamless;
      c. ASTM D3034: Specification for Type PSM Poly (Vinyl Chloride) (PVC) Sewer Pipe and Fittings
   ii. American Society of Mechanical Engineers (ASME) / American National Standards Institute (ANSI):
      a. ASME B31.1 - Power Piping
      b. ASME BPV Section II: Material Specifications
      c. ASME BPV Section IX: Welding and Brazing Qualifications
      d. ANSI 16.3
      e. ANSI 16.4
   iii. American Welding Society (AWS):

a. AWS D10.12: Recommended Practices and Procedures for Welding Low Carbon Steel Pipe

b. A2.4: Symbols for Welding and Non-destructive Testing

c. A3.0: Welding Terms and Definitions

SUBMITTALS

The following submittals are required for portions of the Work specified in this Section.

A. Certificate of Compliance

A Submittal in letter form to indicate a product or portion of the Work complies with the Contract Documents.

1. Provide certificate of compliance for the following items. Certificate must be generated by the manufacturer or supplier and must be notarized.

   i. Welding electrode per the **PRODUCTS**: Section D "Welding Filler Metals", Paragraph 4.

B. Welding Procedure Specifications (WPS)

1. Welding procedures specifically covering all erection welds to be made as part of the Work shall be submitted to the Engineer for review and release before welding is initiated.

2. WPSs shall be prepared in sufficient detail to ensure that the following items, as a minimum, are included and clearly described:

   i. The applicable requirements of this Specification, of ANSI B31.1, Power Piping, and all of the essential and nonessential variables required by ASME BPV Section IX.

   ii. A dimensioned sketch of the actual weld joint to be used for the erection welding. Superimposed on this sketch or on a separate sketch for this purpose, shall be the pass sequence proposed to be used. Variations in thickness, joint geometry and pass sequence proposed to be covered and used shall be covered by separate sketches, but may be contained within the same procedure, provided essential variables are not violated.

   iii. The procedure to be followed for the handling and storage of low hydrogen electrodes and other welding materials. This item may be included in a separate procedure.

   iv. The weld joint preparation methods that are proposed for use on the piping components.

   v. The ASME or ASTM (as applicable) Specification, the grade and P-number of the base material to be welded.

   vi. The pipe diameter and/or base metal thickness range covered by the procedure.

   vii. The ASME Specification and AWS classification number of the filler metals to be used. Also the "F" and "A" numbers.

   viii. The type, polarity and range of current and the voltage to be used.

ix. Preheat, interpass and post-weld heat treatment temperatures and procedures involved.

x. Slag removal and/or other weld cleaning methods proposed for use.

xi. Quality control methods proposed to be used.

3. Each welding procedure submitted shall have an identifying title, unique number, revision number, or letter and date, identifying it in such a manner as to preclude it from being confused with any other procedure used for erection.

4. Each welding procedure shall be identified with the piping system on which it will be used. This may be accomplished by incorporating this information into the welding procedure or by a separate listing combining all piping systems and the welding procedures applicable to each piping system.

5. A typical Welding Procedure Specification (WPS) form is contained in Part QW, Appendix A, QW 482 of ASME BPV Section IX.

C. Welding Procedure Qualification Record (PQR)

1. Welding Procedure Qualification Records (PQR's) shall be submitted to the Engineer for review and release for each welding procedure submitted to be used in the piping system.

2. The PQR submittal shall include sufficient information in the test records to cover, but not necessarily be limited to:

i. The welding procedure number.

ii. The test plate(s) identification number(s).

iii. The identification of the welder used for welding the procedure qualification test plate.

iv. The ASME or ASTM Specification and grade of base material used, P-number and pipe diameter and/or wall thickness.

v. The ASME Specification and AWS Classification number of the filler metal used. Also the ASME "F" and "A" numbers.

vi. The configuration of the test specimen(s) used and their identification number(s).

vii. The individual and organization who conducted the test(s).

viii. The test(s) date(s) and results.

ix. The certification signed by person responsible for the qualification activity.

3. A typical Procedure Qualification Record (PQR) form is contained in Part QW, Appendix A, QW-483 of ASME BPB Section IX.

D. Welder Performance Qualification

1. The Certification of Qualification for all welders and tack welders that are to be used for erection welding on piping systems covered by this Specification shall be submitted to the Engineer for review prior to their use for erection welding.

i. Any erection welds made by a welder in piping systems covered by this Specification, prior to Engineer receiving written confirmation of welder qualification and demonstration of welding abilities on thin-walled steel piping shall be subject to radiography, if applicable, or removal, at Engineer's discretion, the cost of which shall be borne by the Contractor.

2. All welders and tack welders to be employed in the erection of piping systems covered by this Specification shall be qualified by tests in accordance with the requirements of ASME BPV Section IX.

3. The welder and tack welder qualification tests shall be conducted for or by the specific erection Contractor performing work on the Contract. The transfer of performance qualification tests between contractors or subcontractors is not permitted.

4. Sufficient information shall be included in the record of performance qualification test to cover but not necessarily be limited to:

   i. The name and identification number of the welder or tack welder being tested.

   ii. The welding procedure used.

   iii. The test plate(s) identification number.

   iv. The ASME or ASTM Specification and grade of the base material used, P-number and the pipe diameter and wall thickness.

   v. The ASME Specification and AWS Classification of the filler metal used. Also the ASME "F" and "A" numbers.

   vi. The configuration of the test specimen(s) used and their identification number(s).

   vii. The individual and organization who conducted the test(s).

   viii. The certification signed by person responsible for the qualification activity.

5. A typical record of welder or welding operator qualification test form is contained in Part QW, Appendix A, QW 484 of ASME BPV Section IX.

6. All welders and tack welders that are to perform work on the Duluth Energy Systems's piping as part of the Contract shall perform the Welder Performance Qualification Test on thin-walled steel piping at a location, as determined by Duluth Energy Systems, prior to the welder performing any work on the Contract. All tests will be prepared, welded, and tested in accordance with the requirements of ASME BPV Section IX. Test coupons shall be examined by radiography Duluth Energy Systems will provide piping materials for the purpose of such qualification, and OWNER will provide representatives to witness the testing, and reserves the right to reject acceptance of the Welder Performance Qualification tests through the Contract if the welder is unable to exhibit the ability to work on thin-walled steel piping during the qualification test.

E. <u>Welding Contractor Requirements</u>

The CONTRACTOR performing the work on the Duluth Energy Systems piping shall provide reference documentation attesting to their past experience installing thin-wall

steel piping. Such documentation shall include the name of the facility owner, location, date the work was performed, amount and size of pipe installed, and a contact name and phone number for verification purposes.

F. Product Data

Provide manufacturer's data and technical specifications on the following CONTRACTOR furnished products, where applicable. Marketing or sales literature is not acceptable.

1. SCH40 service entry and shunt assembly piping and fittings
2. Ductile iron drain piping
3. Wire standoffs (chairs)

G. Special Reports

1. Pipe Cleaning and Flushing Procedure
2. Alignment and Grade Report (Survey Points File)
3. Record Drawing
4. Weld Identification
   i. The weld identification method to be used for the Project shall be in the form of an “isometric” drawing showing the location of all welds with the corresponding welder I.D. for each weld The Welding Isometric Drawing shall be included with the Final Records and submitted to the Engineer at the conclusion of the project. The Welding Isometric Drawing should to show the location of all radiographs taken on the Project as well as Liquid Penetrant Examination weld numbers.
   ii. After completion of a weld joint, the welder shall identify his work in the manner specified by the erecting CONTRACTOR.

H. Testing Reports

1. Hydrostatic or Dye Penetrant Tests (if dye penetrant testing is approved by the Engineer)
2. Alarm Wiring Tests (See Appendix B)

DELIVERY, STORAGE, AND HANDLING

A. Materials Inspection

For OWNER supplied materials, the CONTRACTOR shall inspect materials at time of pickup and sign the Material Transfer Record indicating receipt of the materials in good condition.

B. Pipe Storage and Handling:

1. Store pipe and fittings to prevent damage by heat, sunlight, weight deflection, or other environmental conditions.
2. Protect ends of all piping materials, including fittings from damage prior to jointing.

3. If a specific pipe material is subject to deformation from specific environmental conditions, store and deliver pipe to trench in enclosed or shaded transport with controlled environment as necessary to protect pipe.
4. Take extreme care in the handling of pipe with interior and/or exterior coatings and wraps to prevent damage prior to installation.

Materials shall be stored as to facilitate inspection and ensure preservation of the quality and fitness of the work, including proper protection against damage by freezing and wet weather.

PRODUCTS

A. Materials and Products Not Specified

Any materials or products required or implied to accomplish the Work indicated or inferred by the Plans and not specified in this Project Specification or on the Plans shall be furnished by the CONTRACTOR in conformance with the applicable specifications, with no additional compensation thereto.

B. Owner Supplied Material and Equipment

The following items of material and equipment are to be separately purchased by Duluth Energy Systems and installed and tested by the CONTRACTOR.

1. Exterior piping and appurtenances for quantities specified on the Plans.
   i. Pre-insulated Carbon Steel Piping
      a. Longitudinally or spirally welded carbon steel piping according to EN 10217 Grade P235GH
      b. Polyurethane foam insulation (PUR) with diffusion barrier according to EN 253
      c. Copper moisture detection wires (1.5 mm^2 diameter, one tinned) embedded in the insulation 15 mm from steel pipe
      d. Corona treated HDPE outer jacket fully bonded to PUR foam insulation according to EN 253

e. The physical properties of typical hot water pipe are as follows:

Pipe Label	Steel Pipe Size	HDPE Jacket Size	Unsupported Length Allowed (when Filled) (ft.)	Weight of Filled HWP (lb./ft.)
20"/28"	20"	28"	35	202
16"/22"	16"	22"	30	135
12"/20"	12"	20"	25	95
10"/18"	10"	18"	20	70
8"/14"	8"	14"	20	45
6"/11"	6"	11"	15	30
4"/9"	4"	9"	10	15
3"/7"	3"	7"	10	10
2"/5.5"	2"	5.5"	10	6

2. Service Entry Valves: ANSI Class 300 pound rated weld-end, unibody ball valves manufacturer by Bohmer, or equal
3. Shunt Assembly Valves:
   i. Globe Valves: 1” weld-end, welded bonnet, forged steel globe valves manufactured by Bonney Forge
   ii. Ball Valves: Apollo 83B-240 (socket weld-end, steel ball valves, ANSI 600 Class)
4. Materials and equipment furnished by Duluth Energy Systems will be stored at a location which the Contractor will be provided access to. The CONTRACTOR shall pick up material from this location at a pre-scheduled time, which is agreeable to the Duluth Energy Systems Representative. The CONTRACTOR shall be responsible for providing all equipment needed to move and transfer equipment from the yard to the project site.
5. At the time of the pick-up, an inspection of material and equipment shall be jointly made by the Contractor and Duluth Energy Systems. Removal of material and equipment by the Contractor from the pick-up area will constitute approval of the condition of the materials and will be documented by signature on appropriate forms (Materials Transfer Record). The transfer of custody to the Contractor will be fully implemented at this time. The Contractor will be provided copies of the Materials Transfer Record once possession of the material is signed over to the CONTRACTOR.
6. The CONTRACTOR shall be responsible for adequate on-site storage of material and equipment after pick-up, during on-site storage and while constructing in the trench and shall protect items as necessary from damage, including damage from adverse effects of the weather and water.

C. <u>Hot Water Piping Products</u>

Some hot water piping materials (pipe, bends, tees, elbows, and valves) will be purchased and provided by Duluth Energy Systems, as outlined in **Section SHW-20**

Department Provided Materials. Where required, the CONTRACTOR shall purchase additional materials to install the pipe, and perform his/her work in accordance with the following:

1. Hot Water Piping and Fittings
   i. Steel pipe per ASTM A53; seamless, Grade A, or electric resistance welded, Grade B.
2. Caps: Use butt weld caps in accordance with ANSI B31.1 Standards.

D. Welding Filler Metals

1. General:
   i. All filler metals shall be fully identified by the ASME Specification number and the AWS classification number whenever referenced in a document.
   ii. When the filler metals are referenced in welding procedures specifications, procedure qualification records, or the record of welder qualification tests, the filler metals shall also be identified by the appropriate ASME group number (F-number) and weld metal analysis number (A-number).
2. Filler Metal Storage and Handling:
   i. Filler metal storage and handling procedures shall be required to maintain the material in a clean and dry condition up to the time of use.
   ii. Low hydrogen electrodes shall be handled and stored in accordance with the manufacturer's recommendations to avoid moisture pickup and to retain the low hydrogen characteristics of the electrode.
   iii. The methods to be used for handling and storing electrodes shall be covered in the welding procedure (See **SUBMITTALS**: Section B “Welding Procedure Specifications”, Subsection 2.iii) or shall be submitted separately.
3. Filler metals for use with carbon steel base materials:
   i. The filler metals used for SMAW shall conform to ASME Specification for Mild Steel Covered Arc Welding Electrodes, SFA-5.1, AWS Classification E7018, E6010, & E7010.
4. Certification:
   i. The erection CONTRACTOR shall submit to the ENGINEER for review and release a Certification of Compliance from the electrode manufacturer stating that the product provided meets the requirements of the Specification and classification for which it was purchased.

E. Ancillary Products

1. Miscellaneous Metals: Steel shapes, plate, bars, ASTM A36
   i. Modular Link Type Seals and Sleeves:
      a. Seals by Thunderline Corp. or equal;
      b. Sleeves - 0.25" thick steel with diameter as required to accommodate seal device;

c. Provide minimum 1/2" water stop ring welded to outside of sleeve where indicated;

2. Alarm Wiring Materials

   i. All electrical materials shall bear the UL label where applicable. Good workmanship shall be evidenced in the installation of all electrical materials and equipment. The National Electrical Contractors Association (NECA) Standard of Installation is hereby adopted to define such workmanship and the application of basic electrical materials.

   ii. Leak Detection System wiring is preinstalled in the piping system.

3. Insulation and Jointing Materials

   Insulating materials to be provided by Duluth Energy Systems, include sleeves, foam, foam halves, plugs, shrink film, shrink wrap, etc. Standard tools and equipment for insulating, other than specialty items will be provided by the CONTRACTOR and shall be considered incidental to the cost for hot water pipe installation.

4. Utility Identification

   i. Buried Warning Tape: 6" wide polyethylene underground utility warning tape with legend and color as follows:

HWP	"Caution Water Line Below"	Blue
Fiber Optic	"Caution Buried Fiber Optic Cable Below"	Orange

   ii. Acceptable Manufacturers and Products:

   "Warnoline" tape by Safety Sign Company, Cleveland, Ohio.
   www.safetysignco.com, 1-800-992-1177.
   "Shieldtec" tape by Empire Level, Inc., Mukwonago, WI.
   www.empirelevel.com, 1-800-872-8425

   iii. Or equal as approved by Duluth Energy Systems.

5. Ductile Iron Pipe

   All drain pipes between hot water pipe flash chambers and storm or sanitary sewer structures shall consist of ductile iron pipe at the size, schedule, and location noted in the Plans.

6. Polyvinyl Chloride (PVC) Standpipes

   All PVC valve standpipes and reducers shall consist of Schedule 80 pipe.

7. Standpipe Plugs

   All standpipe plugs shall be Cherne Original Gripper, or approved equal.

8. Expansion Pad

   Polyethylene foam with closed cells. Non-decomposable. Density 1.25-1.6 lbs/ft^3. Furnished by Duluth Energy Systems.

9. Polystyrene Insulation

   High-load (100 psi) compressive strength rigid insulation board shall be as Manufactured by Dow Chemical Company specifically for buried utility's insulation within traffic-loaded conditions.

10. Tracer Wire

    i. Wire Size or Gauge: 12 AWG

    ii. Jacket color: Blue

    iii. Jacket coating type: HDPE or High Molecular Weight Polyethylene (HMWPE)

    iv. Wire Type: Stranded, Copper Clad Steel or Copper

EXECUTION

A. General Requirements

1. Install hot water piping and all associated components in accordance with the Plans, this Specification, manufacturer's instructions, and reviewed submittals.
2. Hot water service entry valves shall be installed with the valve handles to the sides of the pipes and in a reasonably accessible and operable location, unless directed otherwise by the RPR.

B. Handling of Pipe

1. Protect all pipe from damage during shipping, hauling and handling. Pipe materials are specifically manufactured for each project and are not readily available for replacement.
2. During storage, transportation, and lying, carefully protect pipes so that the casing or insulation is not damaged in any manner. Cushion all saddles or bearings with burlap or other soft material. In handling the pipe, use a cushioned sling will or other devices and methods, as approved by the RPR. No un-cushioned ropes, chains, wedges or levers are to be used in handling the pipe.
3. The CONTRACTOR shall verify alarm wire continuity and resistance for each pipe prior to placement.
4. The CONTRACTOR shall lift the HWP at two location 20 feet to 25 feet apart using nylon lifting straps with a minimum width of 4".
5. The pipe shall not be dropped, walked on, rolled, or handled in any manner that might damage the casing or insulation. In lowering the pipe into the trench, care shall be taken to prevent impact with trench walls or scuffing of the pipe.
6. When pipe is placed in trenches with exposed rock cut, use padded wooden guides as necessary to prevent the pipe from swinging against exposed rock and damaging the pipe.
7. Place pipe along the side of the trench on cushioned blocks as close to the location where it will be laid. If the pipe is to be moved longitudinally along the trench, it shall be walked by crane, loaded on a truck and moved, or moved by other acceptable means.

8. Both ends of the pipe shall be securely capped at all times to keep out foreign matter.

C. Preparation of Work Site

1. Coordination: Coordinate all utility work operations to protect existing and/or new concurrent construction.

D. Alignment and Grade:

1. Protect and maintain all necessary stakes and bench marks for installing the pipe to the alignment and grade as shown in the Plans.
2. Verify all service entry locations prior to installing pipe. Report any discrepancies in location or elevation of connection points to Duluth Energy Systems. Failure to report discrepancies in locations and elevations of connection points prior to beginning pipe installation may result in re-work with no additional compensation to the CONTRACTOR.
3. The CONTRACTOR shall make no deviation from required alignment and grade without written approval from Duluth Energy Systems. Unapproved deviations may be cause for rejection and correction with no additional compensation to the CONTRACTOR.

E. Pipe Laying

1. The CONTRACTOR'S attention is directed to **SHW-24 Earthwork and Pipe Backfill** for specific requirements as they pertain to bedding and backfill materials.
2. Carefully inspect each pipe unit. Remove all foreign matter and dirt from inside the pipe. Damaged units will be rejected or repaired to the satisfaction of the RPR.
3. Install the piping to the alignment and grades indicated on the Plans. Support each pipe on bedding material to have firm bearing along its entire length. Temporary supports may be used to raise the piping or to allow rotating the pipe to facilitate welding joints. Bedding material may be excavated at pipe joints to provide clearance for welding.
4. The ends of the pipe in the trench not being fitted or welded shall be securely capped at all times to prevent the entrance of foreign matter.
5. Pipe shall not, under any circumstances, be placed in water or allowed to become submerged in a flooded trench.
6. Pipe shall be placed in the trench with the alarm wires in the 10 and 2 o'clock positions.
7. Elbows and tees shall have expansion pads installed according to the Plans and Details.
8. Mitered Joints: Deflections in piping that require less than 4 degrees to complete piping alignment may be mitered pipe connections if carefully cut to ensure proper alignment of pipe ends to allow for proper welded joint. Contractor shall utilize elastic flexibility of the pipe wherever possible by welding a minimum of three pipes together and bending the pipe without yielding.

F. Pipe Welding

1. Welders to be currently certified for pipeline welding in accordance with AWS standards. All welding on pipes, fittings, and valves to be done by personnel who have passed an approved competence test and have been certified.
2. Shielded Metal Arc Welding (SMAW) is the welding process to be used for the field erection of piping systems covered by this Specification. Gas Metal Arc Welding (GMAW) may be used for shop fabrication. The type of rods and filler used shall be selected to match the base metal alloy analysis.
3. Welding and weld quality per AWS D10.12.
4. Definitions
   i. The base terms and definitions to be used in conjunction with this Specification are found in ANSI B31.1, 100.2.
   ii. All other terms and definitions which apply to the scope of this Specification are to be in accordance with AWS A3.0-76.
5. Weld Joint Configuration
   i. Weld ends that are to be field welded shall be prepared to the joint configuration specified in the submitted Welding Procedure Specification.
   ii. Steel pipe ends shall be square cut with flat ends or be properly beveled and aligned and spaced for welding with no internal or external burrs.
   iii. Removal of a portion of pipe to facilitate welding of the joint and then replacing the cut out section, sometimes referred to as “fish mouth” or “window” welding, will not be permitted.
   iv. Prepare pipe ends in tees, laterals and reducers for weld penetration in accordance with ANSI B31.1 Standards.
   v. Pipe with wall thickness of 0.142 inches (1/4-in) or 3.6 mm or less shall have a square butt joint design; pipe with greater wall thicknesses shall have a weld preps beveled for welding.
   vi. Weld all pipe joints 3" in diameter and larger, including fittings with full penetration butt welds except where flanges are required.
   vii. On piping smaller than 3” diameter, socket weld components may be used.
   viii. Whenever possible, weld joints should be at least 3 pipe diameters apart, unless otherwise directed by the ENGINEER.
6. Permanent Attachments
   i. Permanent attachments shall be made from materials having a similar chemical composition and a weldable quality that is compatible with best piping material.
   ii. Permanent attachment welds, such as pipe supporting elements, etc., may be either of the full or partial penetration type as specified in the Plans.
   iii. All permanent attachment welds shall be welded in accordance with a qualified and detailed welding procedure that completely describes the specific

attachment, including joint configuration, preheat, welding technique and postweld heat treatment. **<u>The welding procedure shall be submitted to the ENGINEER for review and release before welding is initiated</u>**.

7. Temporary Attachments

   i. Temporary attachments shall be made from materials of weldable quality that are compatible with the base piping material.

   ii. Temporary attachment welds such as strong-backs, alignment clamps, etc., may be partial penetration welds.

   iii. Temporary attachments to the piping shall be welded by qualified welders using the same welding procedure and filler metals as specified and qualified for the piping system(s).

   iv. Welds shall be made using the same preheat, if any, as required for the piping system(s).

   v. All indications of temporary attachments used during erection shall be removed. The surface to which they were welded shall be restored to its original condition by grinding and, if necessary, the deposition of weld metal. The filler metal used shall have equivalent strength of the base material. The welders shall be qualified for the specific procedure used.

8. Preheat and Interpass Temperatures

   i. The following are the mandatory minimum preheat and interpass temperature for carbon steel materials:

Chemistry and Thickness Limitations	*Minimum Temperature*
Less than 0.30%C specified Max. & 1" thickness and less…….....	50° F
Over 0.30%C specified Max. & thickness over 1"……..….....	175° F

   ii. Preheat shall be done in such a manner that the minimum temperature is reached for the full thickness of the pipe wall for a distance of at least 3" on each side of the weld preparation.

   iii. The preheat temperatures shall be checked by use of temperature-indicating crayons, thermocouples, optical or contact pyrometers or other suitable means to assure that the required preheat temperature is obtainable prior to and during the welding operations.

   iv. Preheat temperature checking shall be done in such a manner that the actual temperature of the pipe wall is measured. Surface measurements shall not be taken immediately after removal of the heat source, since such measurements can give false readings.

9. Welding Technique and Workmanship

   i. Base Metal Preparation

a. Pipe end preparation for carbon steel weld joints may be accomplished by either machining or machine thermal cutting. When thermal cutting or beveling is used, the cut surfaces shall be ground or machined to remove a minimum of 1/16" of the heat affected metal.

b. The same preheat required for welding shall be used for thermal cutting and beveling.

c. Surfaces and edges to be welded shall be smooth, uniform and free from fins, tears, cracks, or other defects which would adversely affect the quality or strength of the subsequent weld.

d. Prior to welding, the pipe surfaces for 4" on each side of the joint shall be cleaned of all paint, oil, grease, water, rust, loose or thick scale or other deleterious materials that would have a detrimental effect on subsequent weld quality or produce objectionable fumes during welding.

ii. Joint Fit-Up

a. The geometry of pipe weld joints (i.e., joint preparation and root opening) shall be in accordance with the tolerances specified by the weld joint sketches contained in the welding procedures submitted to the ENGINEER.

b. In cases where the internal misalignment exceeds 1/16", the component with the wall extending internally shall be trimmed internally so that the adjoining internal surfaces are approximately flush. This trimming shall not result in a piping component wall thickness less than the minimum design thickness and the change in contour shall not exceed 30 degrees.

iii. Transition, Different Outside Diameters

a. When pipes of different outside diameters are to be welded together, either of the following two procedures shall be followed:

(1) Fill the weld joint with weld flush with the outside surface of the pipe having the larger diameter. The weld metal transition between the larger and smaller pipe shall have a slope not exceeding 1:3 which may be obtained by grinding.

(2) Taper the outside diameter of the larger pipe by grinding or machining before welding to the outside diameter of the smaller pipe, the angle not exceeding 30°.

iv. Tack Welds

a. Tack welds which are to be incorporated into the final weld shall:

(1) Be subject to the same quality requirements as the weld.

(2) Be made with electrodes of the same quality and strength as will be used for the first pass of the weld.

(3) Be of sufficient number and length to maintain alignment and dimensional tolerances prior to and during the welding of the root pass.

(4) Have all slag thoroughly removed prior to welding the root or other tack covering pass.

(5) Have a profile which can be welded over without adversely affecting the weld quality.

(6) Be made by qualified tack welders using procedures comparable to those to be used for the weld.

(7) Be visually inspected by the welder or inspector prior to the deposition of the first or root weld pass and any defective tact weld removed and repaired.

b. Tack welds which are not to be incorporated into the weld shall be removed completely after their need has been fulfilled.

c. The same preheat shall be used for all tack welds on pipe joints as is required for the final weld.

d. Sufficient tack welds and/or clamps shall be used to maintain the dimensional integrity of the pipe joint and system, as well as preventing significant stresses across the weld during welding.

v. Minimum Temperature

a. Welding shall not be done when the ambient temperature is lower than 0° F (-18° C) or when the pipe surfaces near the weld are wet, exposed to rain, snow, sleet or high wind, or when the welders would be exposed to inclement weather conditions. The ambient environmental temperature may be below 0° F, but a heated structure or shelter around the area being welded could maintain the temperature adjacent to the weldment of 0° F or higher and permit welding.

b. When the base materials are below the specified minimum temperature required in **EXECUTION**: Section F "Pipe Welding", Paragraph 8 "Preheat and Interpass Temperatures", Subsection i., they shall be preheated so that the parts are at or above the specified minimum temperature.

vi. Erection Welding Parameters

a. The welding parameters, i.e., joint configuration, polarity, current, voltage, etc., used in erection shall conform in every respect to the submitted, qualified, and released welding procedure. The pass sequence of the welding procedure shall be used as a guide for weld pass placement and may be modified for variations in base metal thickness electrode diameter, etc.

vii. Weld Cleaning

a. After each weld pass, any slag that is present shall be removed (by wire brushing, chipping or, if necessary, grinding), any undercut blended (by grinding) and any excessive bead convexity and/or surface defects removed (by grinding or chipping) prior to the deposition of the next weld pass or layer.

b. The completed weld shall be cleaned of all slag and weld spatter by chipping, wire brushing or grinding. Excessive convexity or surface roughness shall be corrected by grinding.

viii. Arc Strikes

a. Maximum effort shall be made to confine arc strikes to the areas to be covered by the finished weld.

b. Arc strikes made in areas not to be covered by the finished weld shall be ground and visually inspected to assure that the pipe surface is restored to its original condition.

ix. Weld Craters

a. Weld craters shall be filled to the full cross of the finished weld.

x. Weld Overlap

a. All welds shall be free of overlap.

xi. Weld Undercut Limitations

a. The welding technique employed shall be such as to minimize the undercutting of the adjacent base metal or weld metal.

b. Undercut in excess of 1/32" in or adjacent to a weld groove face shall be blended by grinding prior to the deposition of the next layer of weld metal.

c. Undercut of the edge of a finished weld (butt or fillet) in excess of 1/32" shall be corrected by the deposition of a cover pass of weld metal.

d. Undercuts shall not encroach on the minimum required section thickness or they must be corrected irrespective of depth.

e. Sharp changes in section at the toe of any finished weld shall be blended by grinding, or, where such grinding would result in thinning the base metal below design minimum, by the deposition of a weld cover pass.

xii. Weld Reinforcement

a. As-welded surfaces are permitted; however, the surfaces of welds shall be sufficiently free from coarse ripples, grooves, overlaps, abrupt ridges and valleys to allow the proper interpretation of radiographic and other nondestructive examinations when nondestructive examinations are required.

b. For single welded piping component butt welds, the thickness of the weld reinforcement (in inches) shall not exceed the amount shown below.

Base Metal Thickness	*Max. Reinforcement Thickness*
Up to 1/8 inclusive	3/32"
Over 1/8 to 3/16, inclusive	1/8"
Over 3/16 to 1/2, inclusive	5/32"
Over 1/2 to 1, inclusive	3/16"

c. The thickness of weld reinforcement shall be based on the thickness of the thinner of the materials being joined.

d. The weld reinforcement thickness shall be determined from the higher of the abutting surfaces involved.

e. Weld reinforcement may be removed if so desired.

xiii. Fillet Welds

a. Fillet weld configurations shall be in accordance with AWS provisions.

10. Weld Identification

i. The weld identification method to be used for the Project shall be in the form of an "isometric" drawing showing the location of all welds with the corresponding welder I.D. for each weld The Welding Isometric Drawing shall be included with the Final Records and submitted to the Engineer at the conclusion of the project. The Welding Isometric Drawing should to show the location of all radiographs taken on the Project as well as Liquid Penetrant Examination weld numbers.

ii. After completion of a weld joint, the welder shall identify his work in the manner specified by the erecting CONTRACTOR.

11. Postweld Heat Treatment

i. The permissible temperature range and minimum holding time for postweld heat treatment shall be in accordance with Table 132 of ANSI B31.1, except as modified by Table 132.1 of ANSI B31.1.

ii. Where postweld heat treatment is required, it shall be included in the qualified welding procedure.

G. <u>Moisture Detection Alarm Wiring</u>

1. The Contractor or Subcontractor responsible for the moisture detection alarm wiring on the hot water system will be required to obtain certification from the manufacturer for a minimum of three individuals through attendance in a two day training hosted by Duluth Energy Systems. All individuals responsible for the installation of the alarm wire system shall be certified through this training.

2. The Contractor shall connect the moisture detection alarm wiring pre-fabricated into the piping insulation according to the manufacturer's instructions and the following specifications. In case of a discrepancy between these documents, these specifications shall govern.

3. The CONTRACTOR shall electrically test the leak-detection wiring in each pipe length and fitting that has been installed by the piping manufacturer for the presence of moisture, short, and continuity. The test shall be conducted with a device capable of applying a voltage of 1000 volts for a period of 1 minute, and providing a reading of up to a minimum of 500 MΩ (Amprobe AMB-45 MegaTest or equal). The test parameters for each piece of pre-insulated hot water pipe and hot water fittings shall be as follows:

- Voltage Value. .....1000 V applied for minimum of 1 minute
- Resistance.....Minimum of 500 MΩ

The results of the electrical test shall be marked on each pipe length or fitting with the date of the test, test results and the individual performing the test and reported

to the RPR on the **Alarm Wire Test Form – Resistance** (see **Appendix B**) prior to the installation of each pipe section.

4. Wire connections at pipe joints shall be mechanically crimped and soldered using non-insulated butt connectors, and flux core solder, and positioned in an "S' pattern within the joint.
5. Wires shall be evenly spaced in the foam or plastic chairs, and securely taped to the steel pipe in sufficient quantity to prevent the wires from contacting the steel pipes, or embedded 1/4" to 1/2" deep in foam halves.
6. Electrical equipment and connections required for the operation of the system shall be installed as shown in the Plans.
   i. The CONTRACTOR shall take required special precautions to prevent moisture from entering the piping foam at the pipe joints. At no additional cost to Duluth Energy Systems, the CONTRACTOR shall correct wiring joints that indicate the presence of moisture.

H. <u>Insulation and Sealing of Hot Water Pipe Joints</u>

1. The Contractor or Subcontractor responsible for the insulation and jointing on the hot water system will be required to obtain certification from the manufacturer for a minimum of three individuals through attendance in a two day training hosted by Duluth Energy Systems. All individuals responsible for the installation of the hot water insulation and joints shall be certified through this training.
2. After completion of all alarm wiring and verification of signal through the alarm wiring joint, each field-welded joint shall be insulated according to the manufacturer's installation instructions and these specifications. Where a discrepancy exists, the manufacturer's instructions shall govern.
3. The style of jointing for each weld location has been identified in the plans. No deviation from the provided plan shall be made without the explicit written consent of the Engineer. The joint styles shall be as follows, which corresponds to the Plans:
   i. Shrink Sleeve Joint

      Shrinkable sleeves and foam halves. Sleeves shall be placed over pipe prior to welding, and protected from dirt, debris, mud, etc. through the welding, testing, and jointing process.

   ii. Split Sleeve Joint

      Shrinkable split-sleeves and foam halves.

      Split Sleeve Joints are **unsuitable** for locations where groundwater is present. CONTRACTOR shall promptly notify the ENGINEER of locations where Split Sleeve Joints are necessary due to joint configuration and groundwater is present.

   iii. Welded Joint

      Split or shrinkable sleeves which are fusion welded to the exterior jacket of the pre-insulated pipe and insulated using pour foam.

4. The most critical aspect of achieving water tight joints is the cleanliness of the component materials during installation. Joints that have visible debris or even a non-visible film of dust will result in joints that will eventually fail. While a joint installed with soiled sleeves may be able to seal against free water in the soil, vapor may still penetrate the joint and impact the moisture detection wiring system, rendering future leak detection system monitoring ineffective.
5. Prior to performing the initial Pipeline Alarm Loop Test, the CONTRACTOR shall obtain verification from Duluth Energy Systems through signature or initials on the HWP Inspection and Testing Plan that all insulation installation is completed in accordance with the specifications and is acceptable.
6. Damage to all hot water insulation joints, including, but not limited to jacket penetration, trench flooding prior to insulation jointing, and mud and debris deposits on the interior of jacket sleeves will require ***TOTAL REPLACEMENT*** of the insulation and joint sleeve at <u>no cos</u>t to Duluth Energy Systems. The replacement shall be with same type of joint sleeve originally installed (for instance, if the joint was a Shrink Sleeve Joint, the replacement shall be with a Shrink Sleeve Joint). The CONTRACTOR, at no cost to Duluth Energy Systems, may be required to slide new sleeves over long lengths of pipe, or cut out and re-weld sections of pipe to replace the damaged joint kit in-kind. Refer to **SHW-24 Earthwork and Pipe Backfill** for information regarding trench dewatering.

I. <u>Tracer Wire Installation</u>

1. Connections are not allowed in areas where there will be direct burial of the pipe.
2. Wire shall be placed top center of each pipe and securely taped to the pipe at intervals not exceeding 5'.
3. Tracer wire shall be routed through a separate 2" capped conduit penetration through the wall (holes drilled for wire) and sealed with silicone sealant on both sides of the conduit prior to backfill.
4. Wire shall be terminated at the Flush Fink test station at the service take off and within a 12" x 12" Hoffman enclosure within the building. A 5' coil of each wire shall be left in the enclosure.
5. Inspection and testing. Upon completion of the new system, the CONTRACTOR, with District Energy as a witness, shall perform a locating or conductivity test prior to any backfill.

J. <u>Backfilling and Identification</u>

1. Expansion Pad Installation
   i. See **Appendix C: Expansion Pad Details** for installation instructions.
2. Pipe/Structure Backfilling
   i. Backfill as soon as practical after pipe has been placed and in accordance with the As-Built Documentation requirements of **SHW-17 Acceptance**.
   ii. <u>Pipe Zone</u>: Backfill with granular material of the type indicated or specified, simultaneously on both sides of pipe in maximum 6" lifts.

a. Shovel-place and mechanically tamp to completely fill all spaces under and adjacent to pipe.

b. Conform to ASTM D2321 when backfilling plastic pipe.

iii. Above Pipe Zone: Deposit specified material in maximum 12" lifts to required final subgrade elevation and compact in accordance with requirements of **SHW-24 Earthwork and Pipe Backfill**.

3. Buried Utility Identification

During utility backfilling, place warning tape approximately 1' (or less if appropriate) above all on-site main line piping, service line piping, electrical conduits for communications, etc.; if lines are placed by other utility are disturbed, furnish tape and arrange placement by utility.

K. Pipe Cleaning

1. After installation but before backfilling, and sequencing the work such that all piping will be cleaned from a low point without cleaning through valves, the CONTRACTOR will thoroughly clean the interior of all pipes of all scale, dirt, and debris by water power jetting of the pipes. All scale and debris shall be flushed and removed from the pipeline.

2. For pipes smaller than 4 inch, after installation and before final in service test, a full flow pressurized flush may be performed in lieu of power jetting where the piping configuration will not allow power jetting to be properly performed.

3. To establish that pipe and fittings of smaller diameter can be successfully cleaned, submit for the Duluth Energy Systems' approval a method and procedure proposed to satisfy the cleaning requirements.

4. The cleaning procedure may be repeated at the discretion of Duluth Energy Systems. CONTRACTOR shall notify Duluth Energy Systems 48 hours in advance of flushing operations.

5. Take all precautions necessary to prevent damage to the pipe, insulation, or structures from the cleaning operation and remove the water from the excavations.

6. Take all necessary precautions to ensure that no oil or other lubricant comes in contact with either the inside or outside walls of the pipe.

7. Each segment shall be flushed in a manner to allow water to drain out of the pipe at low points.

8. At the conclusion of pipe flushing for a given segment of pipe, the CONTRACTOR shall obtain verification from Duluth Energy Systems through signature or initials on the HWP Inspection and Testing Plan.

L. Pipe Preservation

1. After Perform pipe cleaning and flushing in accordance with Part J above.

2. Once flushing is complete, the Contractor shall be responsible for drying out the pipe between end caps. Drying shall be accomplished through the use of dry-air heaters or blowers. No propane burners shall be allowed. The moisture level in the pipe will be measured utilizing a dew point meter. Dew point readings must be at or

below -15°F at each outlet (non-blower) end of the pipe. The results of the drying activities shall be recorded on the Pipe Cleaning and Preservation Form (attached).

3. At the conclusion of pipe flushing and drying for a given segment of pipe, the Contractor shall obtain verification from the RPR through signature or initials on the Pipe Cleaning and Preservation Form and HWP Inspection and Testing Plan.
4. Following the drying of the pipe, the Contractor shall install weld caps or weld pup pieces to each end of the pipe to "seal up" the dried section. On the end of each 20" weld cap, the Contractor shall install a ½" nozzle port, ¼ turn ball valve, and plug for the filling and venting of nitrogen.
5. Once drying is completed, the valves shall be closed, and the Contractor shall be responsible for introducing nitrogen into the pipe. These activities should occur within 48 hours, during which time the pipe shall be kept dry. If the Owner's Representative feels that the pipe has not been adequately kept dry, they may ask for a re-test of the dew point readings inside the pipe. Any re-testing shall be performed at the Contractor's expense.
6. Nitrogen charging shall be accomplished by filling each segment of pipe from the lowest point of air introduction (drain valves), and venting at the high point in each segment. Venting shall occur at each high point.
7. The Contractor shall be responsible for verifying all air/oxygen has been evacuated from each pipe segment by using an insertion probe on a gas detection instrument or monitor. A test at each high point air release and the low point where the nitrogen was introduced shall be taken, and the results recorded on the Pipe Cleaning and Preservation Form.
8. At the conclusion of the nitrogen purging, the Contractor shall install threaded plugs, wrapped with Teflon tape on the non-pressure side of the ½" ball valves and back weld the 1/2" threaded plug on the 1/2" ball valves.

QUALITY ASSURANCE

A. <u>Contractor's Responsibilities</u>

1. Establishment of an inspection and testing plan for HWP. This plan shall include all items requiring testing and inspection in accordance with these Special Provisions. See **Appendix A** for samples of inspection and testing plans.
2. The CONTRACTOR shall arrange and pay for the following tests and inspections required for performance of the Work:
   i. Tests and inspections associated with hydrostatic testing and/or liquid penetrant testing.
   ii. Tests and inspections of materials, products, or equipment to certify compliance with Contract Documents, before incorporation into the Work.
   iii. Tests, inspections, or laboratory services necessary with respect to substitutions.

iv. Additional tests and inspections when initial tests or inspections indicate Work does not comply with Contract Documents will be completed at the CONTRACTOR'S expense.

3. The CONTRACTOR shall maintain an adequate inspection system and perform such inspections to insure that the Work performed is in conformance with contract requirements. The CONTRACTOR is to make available to Duluth Energy Systems adequate records of such inspections.

4. If any Work to be done away from the construction site is to be inspected on behalf of Duluth Energy Systems during its fabrication, manufacture, or testing, or before shipment, the CONTRACTOR shall provide a minimum of 48 hours (2 working days) notice to Duluth Energy Systems to arrange for personnel to inspect the Work.

5. Where the CONTRACTOR is required to perform or submit material tests, they shall:

   i. Cooperate with parties requiring material or weld tests

   ii. Provide qualified personnel after due notice

   iii. Perform tests according to schedule

   iv. Promptly submit a copy of each test report to Duluth Energy Systems

6. For tests and inspections performed at the Site, promptly notify parties performing the Work and Duluth Energy Systems of observed irregularities or deficiencies of Work or materials to prevent proceeding with Work which may subsequently be determined to be defective.

7. Include the following in each report as applicable.

   i. Date report issued.

   ii. Project title and number.

   iii. Testing laboratory name, address, and telephone number.

   iv. Name and signature of laboratory inspector.

   v. Date and time of sampling, testing, or inspection.

   vi. Temperature and weather conditions.

   vii. Identification of product and Specification Section.

   viii. Location of sample or test in the Project.

   ix. Type of inspection or test.

   x. Results of tests and compliance with Contract Documents.

   xi. Interpretation of test results when requested by Duluth Energy Systems.

B. <u>Weld Inspection and Testing</u>

1. Welding and Testing procedures shall be in accordance with ANSI B31.1 and the following requirements. All repair and testing of defective welds shall be performed by the CONTRACTOR at no additional cost to Duluth Energy Systems.

2. All hot water piping shall be tested for leaks via pneumatic pressure testing, hydrostatic pressure testing, or dye penetrant testing in accordance with these specifications.
3. There shall be **NO** failed weld tests allowed in the piping system.
4. Inspection
    i. Visual inspection of the weld joint and weld shall be done in an area where suitable light is available. The use of spotlights, magnifiers, or other inspection devices is recommended whenever such devices will enhance the inspection operation.
    ii. Joints shall be visually inspected prior to welding for compliance with this Specification and the released welding procedure for items such as cleanliness, correct groove configuration, alignment, conditions of tack welds if present, the preheat temperature if specified filler metals to be used, etc.
    iii. The welds shall be visually inspected after each pass of multi-pass welds to assure that the weld bead has been properly cleaned of slag, and is free of surface cracks, porosity, excessive convexity, undercut, and other defects. Noted defects shall be removed prior to making the next weld pass.
    iv. Complete welds shall be visually inspected by a qualified weld inspector for the following:
        a. Weld Shape and Appearance:
            (1) The surface of welds shall be smooth and even, sufficiently free of coarse ripples, grooves, abrupt ridges and valleys to allow for proper evaluation of NDE, if required.
            (2) The welds shall be uniform in width and the weld reinforcement joined smoothly into the adjacent base metal.
            (3) Weld reinforcement per **EXECUTION**: Section F “Pipe Welding”, Paragraph 9 “Welding Technique and Workmanship”, Subsection xii.
            (4) Butt weld surface profile per **EXECUTION**: Section F “Pipe Welding”, Paragraph 9 “Welding Technique and Workmanship”, Subsection xii.
            (5) Fillet weld configuration per **EXECUTION**: Section F “Pipe Welding”, Paragraph 9 “Welding Technique and Workmanship”, Subsection xiii.
        b. Any cracks on the external surface of a weld or base metal shall be cause for rejection.
        c. Any visible evidence of lack of complete joint penetration of joints requiring 100 percent penetration shall be cause for rejection.
        d. Craters shall be filled to the full cross section of the required weld.
        e. Undercut shall be held to the requirements of **EXECUTION**: Section F “Pipe Welding”, Paragraph 9 “Welding Technique and Workmanship”, Subsection xi.

f. Evidence of overlap or visible lack of fusion shall be cause for rejection of the weld, if present. Lack of fusion is defined as a condition wherein the fusion between a weld bead and the adjacent material, either base or weld metal, is incomplete. Overlap is defined as the protrusion of weld metal beyond the limits of fusion (see **EXECUTION**: Section F "Pipe Welding", Paragraph 9 "Welding Technique and Workmanship", Subsection x).

g. Any surface porosity shall be removed by grinding. The ground area shall be built up by the addition of weld metal, if the minimum required section thickness has been infringed upon.

h. All weld spatter and slag shall be removed from the weld and adjacent areas in a manner that provides a surface finish conforming to the requirements of the base material specification.

i. All indications of arc strikes remaining after welding shall be removed (see **EXECUTION**: Section F "Pipe Welding", Paragraph 9 "Welding Technique and Workmanship", Subsection viii). This shall be confirmed by NDE.

j. All indications of tack welds, temporary attachments, strong backs, etc., used for fabrication and not specified on drawings shall be removed, and the surface to which they were welded restored to its original condition by grinding and, if necessary, the deposition of weld metal using the same filler metals as designated for the production welds in accordance with **EXECUTION**: Section F "Pipe Welding", Paragraph 7 "Temporary Attachments" and Paragraph 9 "Welding Technique and Workmanship", Subsection iv. prior to hydrostatic testing.

5. Nondestructive Examination (NDE)

i. Radiography of Piping Welds

a. Procedure Requirements

(1) Duluth Energy Systems will be responsible initial weld radiography in accordance with **QUALITY ASSURANCE**: Section B. "Weld Inspection and Testing", Paragraph 7 "Liquid Penetration Examination of Piping Welds" of this Specification. The CONTRACTOR shall schedule, pay for, and perform any additional weld radiography for all weld repairs in accordance with this Specification.

(2) The procedure shall include, but not be limited to, the requirements of ANSI B31.1; the American Society for Mechanical Engineers (ASME) Sec V Nondestructive Examination, Art. 2, Para. T281; and this Specification.

(3) In addition to the requirements of ANSI B31.1 and ASME Sec V, the following shall apply:

Type 4 film shall not be used.

Fluorescent screens shall not be used.

One film shall be used for each radiographic exposure.

The procedure shall be submitted to the ENGINEER for review and release prior to such examinations.

b. Personnel performing or assisting in radiographic examinations shall be qualified and certified in accordance with American Society for Nondestructive Testing (ASNT) SNT TC-1A.

c. Examination Procedure

(1) The surface condition of finished welds shall be suitable for proper radiographic examination.

(2) Welds shall be visually inspected prior to radiography.

(3) Welds shall be repaired if any of the following discontinuities are observed:

Cracks;

Surface Porosity;

Excessive weld reinforcement greater than specified in ANSI B31.1, Table 127.4.2;

Lack of surface penetration;

Incomplete penetration when interior surface is accessible;

Undercut shall not exceed 1/32" (0.8 mm) and shall not encroach on the minimum required section thickness;

Weld overlap and craters.

(4) Radiography of fabrication welds shall be performed in accordance with the written procedure.

d. Acceptance Standards

Welds shown by radiography to have any of the following types of discontinuities are unacceptable:

(1) Any type of crack or zone of incomplete fusion or penetration.

(2) Any elongated indication having a length greater than:

1/4" (6.0 mm) for t up to 3/4" (14.0 mm) inclusive;

1/3 t for t from 3/4" (19.0 mm) to 2-1/4" (57.0 mm) inclusive;

3/4" (19.0 mm) for t over 2-1/4" (57.0 mm) where t is the thickness for the thinner portion of the weld.

NOTE: "t" referred to in preceding Subparagraphs pertains to the thickness of the weld being examined; if a weld joins two members having different thickness at the weld, t is the thinner of the two thicknesses.

(3) Any group of indications in line with an aggregate length greater than t in a length of 12t, except where the distance between the

successive indications exceeds 6L, where L is the longest indication in the group.

(4) Porosity in excess of that shown as acceptable in App A-250 of Sec I of the ASME Boiler and Pressure Vessel Code.

e. Repairs of all defects disclosed by radiography shall be reexamined in accordance with this Specification.

f. Frequency of Field Radiographic Examination

(1) The ENGINEER will perform a minimum of twenty (20) percent of the total butt welds performed by each welder. The CONTRACTOR shall keep a log for each welder and shall notify the OWNER when radiographic examination is required to meet the requisite frequency.

(2) If defects are detected in the work of a welder, the inspection of the work done by that welder shall be expanded at CONTRACTOR expense, to comprise a total of at least three additional joints. These tracers may be taken anywhere on the Project where there are exposed and accessible welds **previously** made by the welder.

(3) If any joint in the expanded inspection is rejected, further radiography shall be conducted to provide 100 percent coverage of work **previously** done by that welder, until five joints in succession are satisfactory.

(4) When all joints in the expanded inspection are satisfactory, the inspection shall revert to 10 percent minimum random sampling.

(5) When defects are detected regularly, or when welding is carried out under poor conditions, the ENGINEER may expand radiographic control to 100 percent at the CONTRACTOR's expense, with notification in writing thereto.

g. Records and Submittals

(1) Copies of the following documents shall be submitted to the ENGINEER for review and release:

Radiographic testing procedure

Personnel Certifications;

Radiographic reader sheets, including film interpretation;

(2) One radiographic film of each radiographed location shall be submitted to the ENGINEER for review and release.

Included with the films shall be all radiographic films containing discontinuities requiring repair.

All radiographic films, including tracer and repair films, taken on the piping systems are the sole property of Owner.

(3) Each document and film shall contain, but not be limited to, the following identifying information:

Client Name (Owner)

Identification of the Piping System (Project Number)

Date of Radiography

Manufacturer's Name or Symbol

Weld Identification Number

Welder Identification

Signature of Interpreter

Examination Procedure Number

(4) The CONTRACTOR shall obtain verification from the OWNER'S Representative through signature or initials on an approved HWP Inspection and Testing Plan that all radiography is completed in accordance with the specifications and is acceptable.

6. Leakage Testing

i. General

a. Except as approved by the Engineer according to **QUALITY ASSURANCE**: Section B. "Weld Inspection and Testing", Paragraph 7 "Liquid Penetration Examination of Piping Welds" Subsection i.a, leak testing shall be performed in accordance with the requirements of ANSI B31.1, Section 137, and the local inspection requirements.

b. Design pressure of the hot water system is 140 psi. Hydrostatic test pressure shall be performed at 1.5 times the design pressure (210 psi). Pneumatic test pressure shall be 10 psi.

c. Under certain special conditions, such as during overnight connection sequences, the CONTRACTOR may request welds receive visual inspection by Duluth Energy Systems in lieu of hydrostatic pressure testing. The decision to accept visual inspection under special conditions shall be at the sole discretion of Duluth Energy Systems.

d. In lieu of hydrostatic or pneumatic testing, dye-penetrant testing on every weld may be performed in accordance with **QUALITY ASSURANCE**: Section B. "Weld Inspection and Testing", Paragraph 7 "Liquid Penetration Examination of Piping Welds", and in accordance with ASME standard specifications.

e. The CONTRACTOR shall notify the RPR 48 hours in advance of any testing operations, with the procedures subject to the RPR's approval.

f. There shall be no weld testing failures or leakage in the pipelines.

g. The CONTRACTOR is responsible for all costs associated with leak testing. The CONTRACTOR shall refer to **QUALITY ASSURANCE**: Section B. "Weld Inspection and Testing", Paragraph 7 "Liquid Penetration Examination of

Piping Welds" for the use of liquid penetration testing in lieu of hydrostatic testing for welded connections.

h. The CONTRACTOR shall be responsible for notifying the ENGINEER at least 24 hours prior to the proposed start of hydrostatic testing.

i. A copy of the Leakage Testing Record can be found in the Appendix.

ii. Procedure Requirements

a. Leak testing shall be performed in accordance with the Specification and the requirements of ANSI B31.1, Section 137.

b. All leak testing performed on the piping system shall be hydrostatic or pneumatic testing, unless the procedures of **QUALITY ASSURANCE**: Section B. "Weld Inspection and Testing", Paragraph 7 "Liquid Penetration Examination of Piping Welds" are followed by the CONTRACTOR.

c. The CONTRACTOR shall develop a procedure for leak testing and **submit it to the ENGINEER for review and release** prior to any leak testing occurring.

iii. Hydrostatic Examination Procedure

a. After the joints have been welded or connected and the pipe has been placed in its final position in the piping system, but before the pipe coating and/or insulation is applied, the CONTRACTOR shall Leak Test all joints.

b. All welded joints shall be open, clean and accessible for circumferential inspection prior to the start of and during hydrostatic testing.

c. The CONTRACTOR shall furnish and install suitable temporary testing plugs or caps for the pipeline, all necessary bracing, pressure pumps, pipe connections, meters, calibrated gages and other similar equipment, and all labor required.

d. The meter and gage shall be installed by the CONTRACTOR in such a manner that all water entering the section under hydrostatic test will be measured and the pressure in the section indicated, and shall be kept in use during the hydrostatic test.

e. The section of pipe to be hydrostatically tested shall be filled with water of approved quality.

f. All air shall be expelled from the pipe prior to hydrostatic testing.

(1) If air releases or blow-offs are not available at high points for releasing air, or if drains or blowdowns are not available at low points for draining water, the CONTRACTOR may, with the prior approval of the ENGINEER, add the necessary permanent attachments (nipples, hose connections, valves, fittings, etc.) in accordance with these Special Provisions to properly conduct the test.

(2) All permanent attachments shall be properly plugged upon completion of the test.

(3) The CONTRACTOR shall be responsible for all costs incurred for the installation of any permanent attachment as defined in Paragraph f.(1).

g. The water shall be allowed to stand under pressure a sufficient time to allow the escape of air from any air pockets.

h. The pressure should then be increased to 210 psi for primary piping per ANSI B31.1, Para. 137.3.4.

i. The test pressure shall be maintained for at least one hour without any pressure drop or leakage. During this time all welds shall be visually inspected for leakage. Care must be taken to ensure that very small weld leaks will be detected.

j. After successful completion of the pipeline hydrostatic test, the pressure shall be reduced to 140 psi and maintained at that pressure for the valve acceptance test.

(1) This test involves the temporary removal of the blind flanges and any screw-on caps/plugs to verify a bubble tight seal (per manufacturer's specifications) of <u>all</u> service entry valves including but not limited to: Main service entry valves, shunt valves, air/drain valves, DP sensor/control valves or chamber/isolation valves.

(2) The valve acceptance test shall be performed by the CONTRACTOR and witnessed by the ENGINEER.

iv. Pneumatic Examination Procedure

a. After the joints have been welded or connected and the pipe has been placed in its <u>final</u> position in the piping system, but before the pipe coating and/or insulation is applied, the CONTRACTOR shall Leak Test all joints.

b. All welded joints shall be open, clean and accessible for circumferential inspection prior to the start of and during pneumatic testing.

c. The CONTRACTOR shall furnish and install suitable temporary testing plugs or caps for the pipeline, all necessary bracing, pressure pumps, pipe connections, meters, calibrated gages and other similar equipment, and all labor required.

d. The air pressure in the pipe should be slowly increased to 10 psi.

e. The test pressure shall be maintained for at least 10 minutes without any pressure drop or leakage. During this time all welds shall be visually inspected for leakage with a solution of soap and water. Care must be taken to ensure that very small weld leaks will be detected.

v. Acceptance Standards

a. If, in the judgment of the ENGINEER, it is impractical to follow the foregoing procedure exactly for any reason, required modifications in procedure shall be made.

b. There shall be no leakage allowed in the piping system.

c. The CONTRACTOR shall be responsible for the ultimate leak tightness of the piping system.

d. After successful completion of leak testing, absolutely no welding will be allowed on the completed section of the piping system without additional hydrostatic testing being performed on those welds.

vi. Re-Examination of Repairs

a. If a section should fail to pass the leakage test, the section must be vented and/or drained of all water and all repairs made in accordance with approved repair procedures. No repairs will be made with water in the piping system unless previously authorized by the OWNER in writing.

b. The section shall then be retested by the above procedure, except that welded joints previously accepted need not be re-examined.

vii. Records and Submittals

a. Leak testing procedure

b. Leak Test Examination results shall be reported on a Leak Test Report form (see Appendix C) containing the following data:

(1) Client Name

(2) Contractor Name

(3) Date of Examination

(4) Test Location

(5) Test Section (i.e., Station to Station)

(6) Fill Water Source

(7) Start Test time

(8) End Test Time

(9) Start Test Pressure

(10) End Test Pressure

(11) Pipe Size(s)

(12) Results of Examination

(13) Signature of Contractor Representative

(14) Signature of Inspector

c. The CONTRACTOR shall obtain verification from the OWNER'S Representative through signature or initials on an approved HWP Inspection and Testing Plan that all leak testing is completed in accordance with the specifications and is acceptable.

7. Liquid Penetration Examination of Piping Welds

   i. General

      a. The Contractor may request that liquid penetration examination be used in lieu of hydrostatic or pneumatic pressure testing to test for leakage of the welded steel hot water piping. This request must be made in writing and addressed to the Owner and the Engineer.

      b. If liquid penetration examination is approved for use, 100% of the welds on the hot water piping shall be tested per the approved procedure. Under certain special conditions, such as during overnight connection sequences, the CONTRACTOR may request welds receive visual inspection by Duluth Energy Systems in lieu of liquid penetration examination. The decision to accept visual inspection under special conditions shall be at the sole discretion of Duluth Energy Systems.

      c. The CONTRACTOR is responsible for all costs associated with liquid penetration testing.

      d. The CONTRACTOR shall be responsible for notifying the ENGINEER at least 24 hours prior to the proposed start of liquid penetration testing.

   ii. Procedure Requirements

      a. The liquid penetration examination shall be performed in accordance with a detailed written procedure. The procedure shall be **submitted to the ENGINEER for review and release prior to such examinations**.

      b. The procedure shall include, but not be limited to, the requirements of ANSI B31.1; the American Society for Mechanical Engineers (ASME) Sec V - Nondestructive Examination, Art 6, Para. T681; and this Specification.

      c. In addition to the requirements of ANSI B31.1 and ASME Sec. V., the following shall apply:

         (1) Shot or sand blasting shall not be used on the surface prior to examination.

         (2) Cleaning solvents and penetration families shall be certified by the manufacturer to contain not more than one percent (1%) by weight of sulfur, nor more than one percent (1%) residual total halogens.

         (3) Intermixing of penetration families will not be permitted.

         (4) Fluorescent penetration examination not allowed.

   iii. Personnel performing or assisting in liquid penetration examinations shall be qualified and certified in accordance with American Society for Nondestructive Testing (ASNT),
   SNT TC-1A.

   iv. Examination Procedure

      a. The surface condition of finished welds shall be suitable for proper liquid penetration examination.

b. All welds shall be visually inspected prior to liquid penetration examination.

c. Welds shall be repaired if any of the following discontinuities are observed:

(1) Cracks;

(2) Surface porosity;

(3) Excessive weld reinforcement greater than specified in ANSI B31.1, Table 127.4.2;

(4) Lack of surface penetration;

(5) Incomplete penetration when ID surface is accessible;

(6) Undercut shall not exceed 1/32" (0.8 mm) and shall not encroach on the minimum required section thickness;

(7) Weld overlap or craters.

d. Liquid penetration examination shall be performed in accordance with the written procedure.

v. Acceptance Standards

a. Indications whose major dimensions are greater than 1/16" (1.6 mm) shall be considered relevant.

b. The following relevant indications are unacceptable:

(1) Any cracks or linear indications;

(2) Rounded indications with dimensions greater than 3/16" (5.0 mm);

(3) Four or more rounded indications in a line, separated by 1/16" (2.0 mm) or less, edge to edge;

(4) Ten or more rounded indications in any six square inch (3870 MM^2) of surface with the major dimension of this area not to exceed six inches (150 MM) with the area taken in the most unfavorably location relative to the indications being evaluated.

vi. Re-Examination of Repairs

a. Repairs of all defects disclosed by liquid penetration examination shall be re-examined in accordance with this Specification.

vii. Records and Submittals

a. Three copies of the following documents shall be submitted to the ENGINEER for review and release:

(1) Liquid penetration examination procedure

(2) Liquid Penetration Examination Report

(3) Personnel Certifications

b. Liquid penetration examination results shall be reported on a written report form containing at least the following data:

(1) Client Name (Owner)

(2) Identification of the Piping System (Project Number)

(3) Weld Joint Identification.

(4) Date of Examination.

(5) Signature of Examiner.

(6) Examination Procedure Number.

(7) Material Identification.

(8) Type of Penetration Method used.

(9) Results of examination and defect locations before repair.

c. The CONTRACTOR shall obtain verification from the OWNER'S Representative through signature or initials on an approved HWP Inspection and Testing Plan that all liquid penetrant examinations are completed in accordance with the specifications and is acceptable.

8. Repairs

i. All welds containing defects shall be repaired by first removing the defective area by either machining, grinding, chipping, flame or arc gouging or a combination of these methods. Whenever flame or arc gouging is used, an additional 1/16" of the gouged surface shall be removed by grinding or machining. The method selected shall be appropriate for the material involved.

ii. Base materials which require preheating for welding shall also be preheated to the same extent before flame or arc gouging.

iii. The defective portion of the weld shall be removed without substantial removal of the base material.

iv. Repair welds shall be made in accordance with the same procedure used for the original weld or by another welding process if it is part of a qualified procedure. The cavity to be repaired may differ in contour and dimensions from the original joint. The side walls of the excavated area shall have a minimum included angle of 75° and the ends shall have a minimum included angle of 120°.

v. The repaired area shall be examined by the same method, to the same extent and to the same acceptance requirements as the original weld.

vi. The ENGINEER shall be notified, prior to repair welding, of all weld defects which extend into the base material.

vii. Weld repairs that are required after postweld heat treatment in components which require postweld heat treatment shall again be postweld heat treated after repair welding.

9. Re-Examination of Repairs

i. If a weld should fail to pass a Liquid Penetration Examination, the repair must be made in accordance with approved repair procedures.

ii. The section shall then be retested be the above procedure except that welded joints previously accepted need not be re-examined.

iii. If in the judgment of Duluth Energy Systems, it is impractical to follow the repair procedure for any reason, required modifications in the procedure shall be subject to the Duluth Energy Systems' written approval.

iv. The CONTRACTOR shall be responsible for the ultimate leak tightness of the line subject to Duluth Energy Systems' approval. All repair and testing of defective welds shall be performed by the CONTRACTOR at no cost to Duluth Energy Systems.

C. Moisture Detection Alarm Wiring

1. The CONTRACTOR shall electrically test all wiring, equipment, and the operation of the newly constructed portion of the leak-detection system according to the procedure below. The results of the electrical tests shall be documented and reported to Duluth Energy Systems prior to the foaming and closing of the pipe joints. Contact Duluth Energy Systems to verify all alarm loop wiring is acceptable. Do not proceed with the Work until unsatisfactory conditions have been corrected, ***and acceptance by Duluth Energy Systems is obtained*** through signature or initials on the ***HWP Inspection and Testing Plan***.

2. Test from previous joint to the testing joint

   i. Wire to Wire Testing

      a. Loop testing joint to previous joint with alligator clip

      b. Measure resistance between the copper wires to ensure each full length of pipe is greater than 0.015 Ω/m and each fitting has a resistance greater than 0.1 Ω.

      c. If the value is ∞ Ω, then the circuit is open, and the wire is broken. Locate and repair.

      d. If the value does not reach the expected value, there is potential for the wire being crossed at the testing joint.

   ii. Wire to Pipe Testing

      a. Connect to each wire and steel pipe and test at 1000 volts.

      b. If the test result is less than 500 MΩ, the joint has moisture in the shell and must be repaired.

      c. If the test result is 0 MΩ, this indicates that the wire is touching the steel pipe, locate the short and retest.

3. Upon completion of the insulation joints by the CONTRACTOR, the "Pipeline Alarm Loop Test" will be conducted by the Duluth Energy Systems's personnel and witnessed by the CONTRACTOR. The Pipeline Alarm Loop Test shall consist of the following requirements:

   i. Upon completion of the wire connections and insulation joints by the CONTRACTOR, a final test will be conducted by Duluth Energy Systems personnel. These tests shall be witnessed by the CONTRACTOR and acknowledged by signature on the **Alarm System Loop Test Report** (See **Appendix B**).

ii. The final acceptance tests for this Project will be conducted at each Remote Monitoring Station handhole installed as part of the project and shown in the Plans.

iii. If any faults are indicated by the Pipeline Alarm Loop Test Equipment, the CONTRACTOR will be required to make the necessary corrections, at no additional cost to Duluth Energy Systems, and the system will be retested until the results meet the following parameters:

- Loop Resistance..... Verification of a completed loop. Resistance is based upon the length of the wire.
- Galvanic Voltage..... 0 mv
- DC Resistance 0
- AC Resistance ..... 9999 KΩ
- Status..... 0

iv. Prior to backfilling, the CONTRACTOR shall obtain verification from the RPR through signature or initials on the HWP Inspection and Testing Plan.

4. The "Pipeline Alarm Loop Test" shall be repeated after the piping system has been backfilled and is at operating temperature. The results of the tests shall be documented on the "Pipeline Alarm Loop Test" report and signed by the RPR and CONTRACTOR. The CONTRACTOR shall ***obtain verification from Duluth Energy Systems through signature or initials on the HWP Inspection and Testing Plan***.

5. Duluth Energy Systems is to be notified at least 24 hours in advance of testing of the leak-detection system. Duluth Energy Systems shall observe those tests demonstrating system operation. Improper connections and testing could result in damages to the electronic components of the system. The CONTRACTOR shall be responsible for any repair costs that result from improper connections.

Appendix A

Quality Assurance Documents

DULUTH ENERGY SYSTEMS
One Lake Place Drive
Duluth, Minnesota 55802
Phone: 218-723-3601

Materials Transfer Record

Contractor: _____

Date: _____

Custody of the following materials is hereby transferred from the Owner to the Contractor identified above. Ownership of the listed materials is retained by the Owner.

In accordance with Contract Document requirements, the Contractor hereby assumes responsibility for the proper installation and protection from loss or damage. All materials not incorporated in the Project installation will be returned to the Duluth Energy designated storage facility. Receiver's signature acknowledges receipt of materials undamaged and in good order.

Project: _____

Description: _____

Items Transferred:

Line Item	Qty	Size	Item Description

Acknowledgments:
The following signatures acknowledge physical custody transfer, acknowledgement of the terms and conditions of this transfer and acceptance of the items listed above:

Owner:	**Contractor:**
Transferer's Signature	Recipient's Signature
Typed or Printed Name _____ Date _____	Typed or Printed Name _____ Date _____

Copies to: Contractor, Owner

DULUTH ENERGY SYSTEMS

One Lake Place Drive
Duluth, Minnesota 55802
Phone: 218-723-3601

HWP Inspection and Testing Plan

Contractor: _____

Date: _____

Project: _____

Description of Location: _____

Item No.	Item Description	Checkpoint (Yes or No)	Contractor Initial		Owner Initial	
			Initial	Date	Initial	Date
1	Install Pipe Bedding	**Yes**				
2	Install New Piping					
	• Check Alignment & Grade	**Yes**				
	• Alarm Wiring Check (Pre-Installation)	**Yes**				
	• Insulation/Jacket Installation	**Yes**				
	• Alarm Wiring (Pipeline Alarm Loop Test (pre-backfill))	**Yes**				
	• Alarm Wiring (Pipeline Alarm Loop Test (post-backfill)	**Yes**				
3	NDE Examination of Welds					
	• Radiography	**Yes**				
	• Liquid Penetrant	**Yes**				
	• Hydrostatic Test	**Yes**				
4	Power Jetting (Cleaning)	**Yes**				
5	As-Built Survey Measurements	**Yes**				
6	Pipe Backfill					
7	Conduit Pipe Installation	**Yes**				
8	Warning Tape Installation	**Yes**				
9	Handhole Installation	**Yes**				

Testing Acknowlegements

Contractor: _____ *Date*: _____
Signature

_____ _____
Typed or Printed Name

Owner Representative: _____ *Date*: _____
Signature

_____ _____
Typed or Printed Name

DULUTH ENERGY SYSTEMS
One Lake Place Drive
Duluth, Minnesota 55802
Phone: 218-723-3601

HWP Alarm Wire Test Form - Resistance

Contractor: _____

Date: _____

Project: _____

Description of Location: _____

Alarm Wire Test - Resistance

Date	Location (HWP Alignment Station)	Supply or Return	Type of Fitting (pipe, valve, tee, bend, air release, etc.)	Wire 1 Reading (MΩ)	Wire 2 Reading (MΩ)	Pass/ Fail	Contractor Initials	Owner Initials

Testing Acknowlegements

Contractor: _____ *Date*: _____
Signature

_____
Typed or Printed Name

Owner Representative: _____ *Date*: _____
Signature

_____
Typed or Printed Name

Copies to: Contractor, Owner

DULUTH ENERGY SYSTEMS
One Lake Place Drive
Duluth, Minnesota 55802
Phone: 218-723-3601

HWP Alarm System Loop Test Report

Contractor: _____

Date: _____

Project: _____

Description of Location: _____

Alarm System Loop Test

Date	Location/Segment (HWP Alignment Station or Segment)	Loop Resistance	Galvanic Voltage	DC Resistance	AC Resistance	Status	Comments

Testing Acknowlegements

Contractor: _____ *Date:* _____
Signature

_____
Typed or Printed Name

Owner Representative: _____ *Date:* _____
Signature

_____
Typed or Printed Name

Copies to: Contractor, Owner

DULUTH ENERGY SYSTEMS
One Lake Place Drive
Duluth, Minnesota 55802
Phone: 218-723-3601

Pipe Cleaning and Preservation Form

Contractor: _____

Date: _____

Project: _____ **Location:** _____

Pipe Cleaning and Preservation Summary

Alignment	Supply/ Return	Pipe Begin Station	Pipe End Station	Pipe Cleaning		Pipe Drying			Nitrogen Charging				Notes/Comments
				Owner Initials	Date	Outlet Dew Point	Owner Initials	Date	Inlet N_2 Reading	Outlet N_2 Reading	Owner Initials	Date	

Testing Acknowlegements

Contractor: _____ *Date*: _____
Signature

_____
Typed or Printed Name

Owner's Representative: _____ *Date*: _____
Signature

_____
Typed or Printed Name

Copies to: Contractor, District Energy

DULUTH ENERGY SYSTEMS
One Lake Place Drive
Duluth, Minnesota 55802
Phone: 218-723-3601

Leakage Test Report

Contractor: _____

Date: _____

Project: _____

Description of Location: _____

Design Temperature: _____ ^{o} F

Design Pressure: _____ psi

Test Pressure: _____ psi[1]

Date	Location/Segment (HWP Alignment Station or Segment)	Required Test Pressure	Required Gauge Pressure[2]	Actual Gauge Pressure	Test Start Time	Test End Time	Comments

Testing Acknowlegements

Contractor: _____ *Date:* _____
Signature

_____
Typed or Printed Name

Owner Representative: _____ *Date:* _____
Signature

_____
Typed or Printed Name

[1] Test Pressure
= 1.5 x Design Pressure

[2] Hydrostatic Test Only
= ((High Point Elev. - Gauge Elev.) x 0.433)+125

Copies to: Contractor, Owner

Appendix B

Manufacturer's Hot Water Alarm Wiring and Joint sealing Installation Instructions

Checking alarm wires
General

Preparations

The two copper wires, embedded in the insulation, are delivered with protection against damage by winding and fixing them to the insulation by means of staples.
When installing the pipes in the trench follow the specifications of the wire position in the surveillance diagram.

Place the pipes so the wires face upwards (10-to-2-o'clock position), and so the tinned wires and the copper wires are installed in pairs opposite each other.

This facilitates the installation and is a must in systems with pulse measuring and coaxial cables.

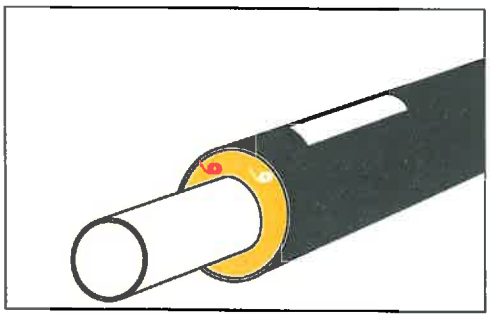

At each joint there must only be one pipe label and it must face upwards (12 o'clock position).

In the surveillance systems the alarm wires are placed at the top of the pipe in order to achieve i.a.:
- optimum installation conditions
- permanent accessibility of the wires when establishing branches.

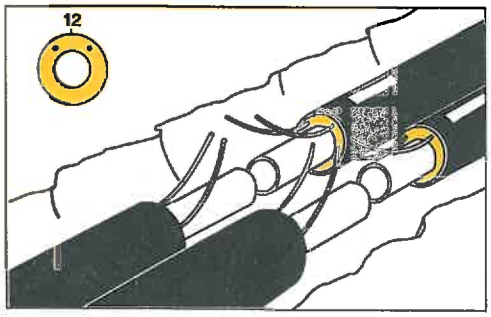

Straightening

Wind the coiled wires from the countersink holes in the insulation, when the pipes have been welded together.

Remove dirt and moisture from the insulation of the pipe ends.

Straighten the wires and clean the ends with a cloth of synthetic textile or emery cloth.

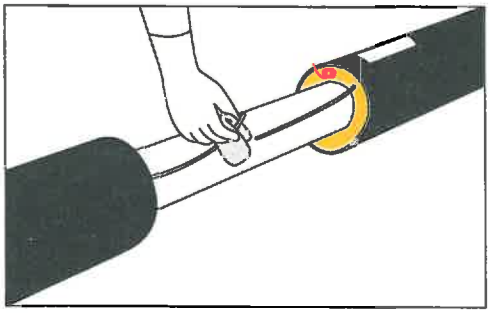

Repairing wires

Examine the wires for possible damage. If a wire has been damaged e.g. during removal of the insulation, remove the insulation around the wire end and solder a new piece of wire on as described in the following.

Note! Do not use a gas flame when soldering towards the insulation.

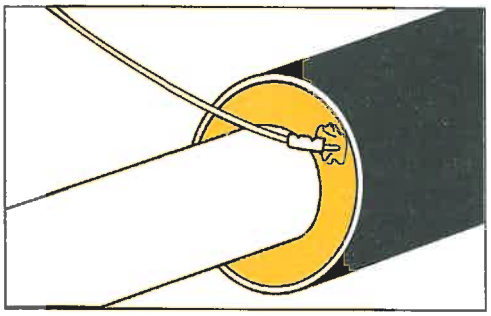

Checking alarm wires
The megger

Adjusting the control instrument

Carry out 2 kinds of tests:

1. Measuring the wire resistance to check that there is good electrical connection through the connected wires.
2. Measuing the insulation resistance to check that the wires have been correctly isolated from the steel pipe (15 mm).

These checks are carried out at each joint with a wire and insulation resistance tester, the megger MIT 320.

The megger is zero set by connecting the alligator clips and activating "Test" in "Ω" position.

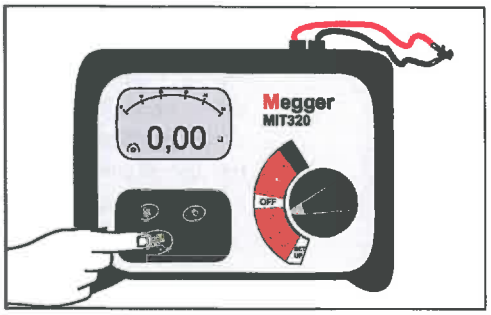

Warning

Never use the megger with connected detectors as the voltage emitted by the megger may damage the exits of the detectors.

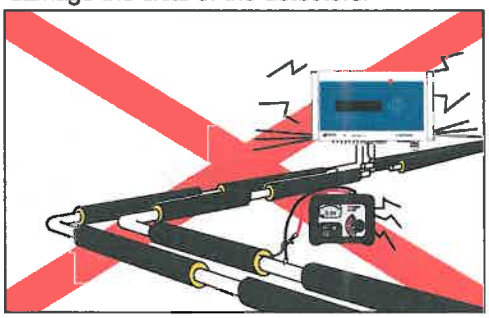

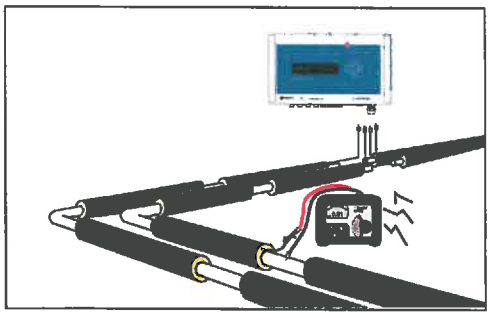

Checking alarm wires
Using the megger

Preparations for checking the joint

When beginning the wire installation, connect the wires in the two pipes as shown in the illustration. Tinned wire to copper wire in each pipe.

Hereby 2 measuring circuits are established which must be used to check the wire connections on the subsequent joints.

Naturally, in TwinPipes there are only 1 measuring circuit.

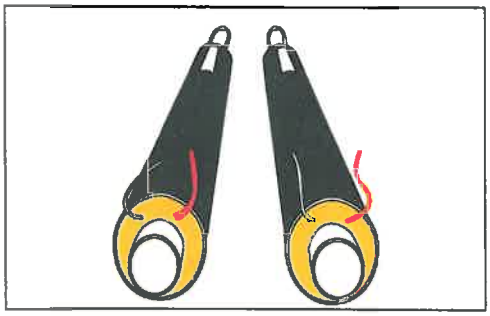

Test 1, wire resistance

- Connect the instrument wires to the cleaned wire ends
- Place the switch in measuring range "Ω" The megger shows the actual ohmic resistance in the wires.

At the beginning of the installation the deflection is insignificant, but it increases as more metres of wire are connected.

Resistance measurement: Approx. 1.2 Ω at 100 m 1.5 mm² wire.

If there is no deflection, there is no connection.

If the resistance does not correspond to the actual length, a poor wire connection has been made in the previous joint.

- Check this joint and repair it.
- Repeat the test.

Check both measuring circuits in the pipes in this way.

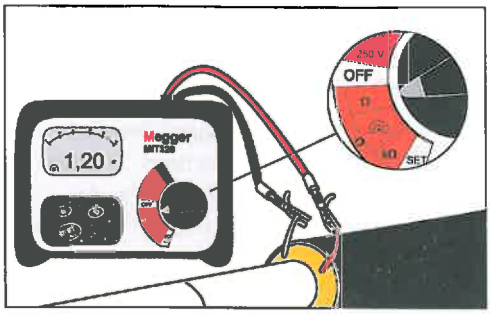

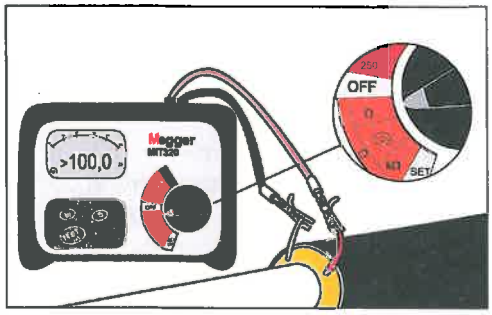

Checking alarm wires
Using the megger

Test 2a, insulation resistance in kΩ

- Place the switch in measuring range: kΩ.
- Connect one instrument wire to one of the wires in the pipe.
- Hold the other instrument wire against the steel pipe. Check that there is good electrical connection. Use the weld.

Read off the insulation resistance.

If the reading is < 1000 kΩ, note the resistance for possible later reference.

If the reading is lower, an incorrect installation (moisture) has been made in the previous casing joint.

- Check the joint.
- Remove possible moist foam. Repeat the test.
- Check all the wires in the joints in this way.
- Now move the instrument to the next pipe joint.

If the reading is > 1000 kΩ, continue to test 2b.

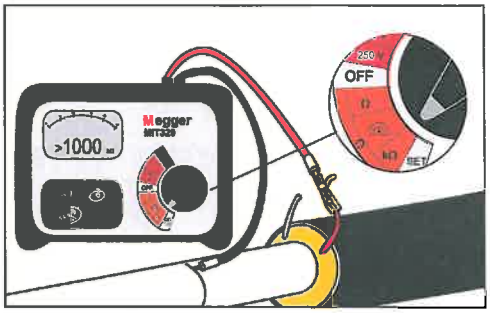

Test 2b, insulation resistance in MΩ

Note!
Before carrying out this test make sure that NO dectectors are connected to the pipe system to avoid damage.

- Place the switch in measuring range: MΩ, 250 V.
- Connect one instrument wire to one of the wires in a pipe.
- Hold the other instrument wire against the steel pipe. Check that there is good electrical connection. Use the weld.
- Press the test knob, until the reading appears.
- The actual insulation resistance can now be read

Acceptance value: ≥ 10 MΩ/km wire

To measure a fault location exactly use a pulse reflectometer.

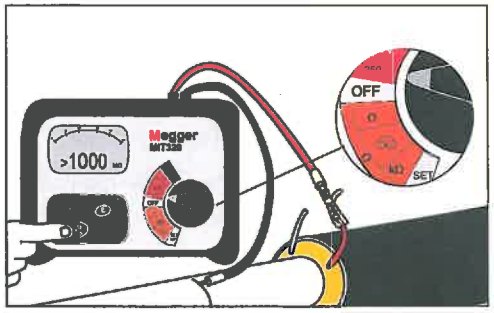

Connecting alarm wires
General

Connecting wires

Straighten the wires.

Cut the overlapping ends off.

Clean the wire ends with a synthetic textile or emery cloth.

Place a crimp connector on one of the wires and crimp it with the crimping tool, jaw width 1.5 mm.

The crimp connector has a stop in the middle and a "window" for visual control that the insertion is correct.

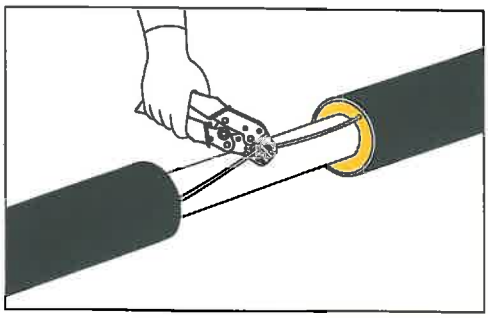

Insert the other wire into the crimp connector and crimp it.

A good mechanical connection is now ensured.

Note! The wires must be tight, i.e. the same length as between the foam ends.

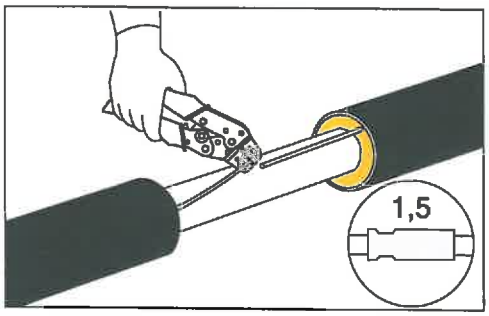

Soldering the wires

Heat the crimp connector with the soldering iron. When its colour changes and becomes shiny the temperature is correct.
Add tin solder with resin flux to both ends of the crimp connector. The soldering has been carried out correctly, when the tin has been absorbed in the ends of the crimp connector and becomes visible.
Now a good electrical connection has also been established.

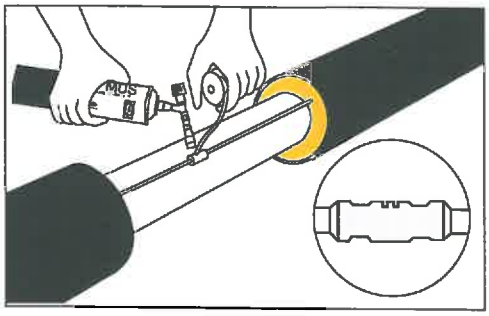

Connecting alarm wires
Straight joints with insulation shells

Preparing installation of insulation shells

Bend the wires backward to make them rest evenly on the insulation end and to disable contact with the steel pipe.

Adapt the insulation shell in accordance with the instructions for installing the joint type in question.

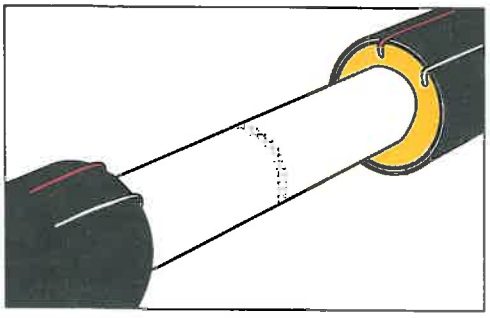

Insertion of wires in the insulation

Place the insulation shells and align the alarm wires on the outside of the shells. Pull the wires so they do not get in contact with the steel pipe.

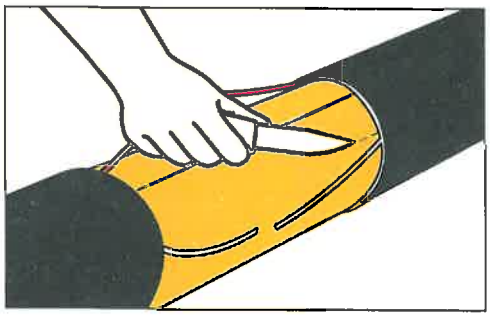

Make a slot in the insulation shells and make sure that the alarm wire does not touch the diffusion barrier, D under the casing.

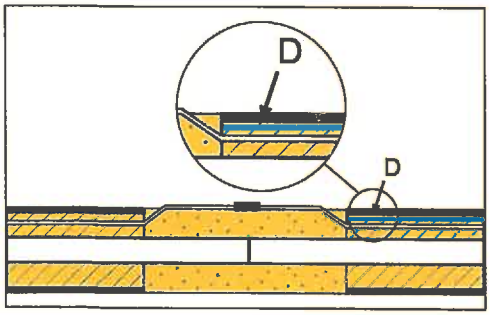

Connecting and fastening wires

Adjust, connect and solder the wires as described in the general section, 23.4.1.

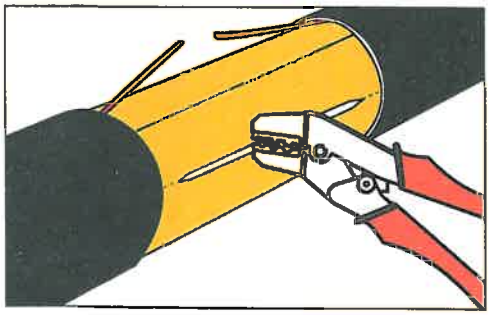

Connecting alarm wires
Straight joints with insulation shells

Connecting and fastening wires, ***continued***

Fasten the wires to the insulation shells by means of crepe tape.

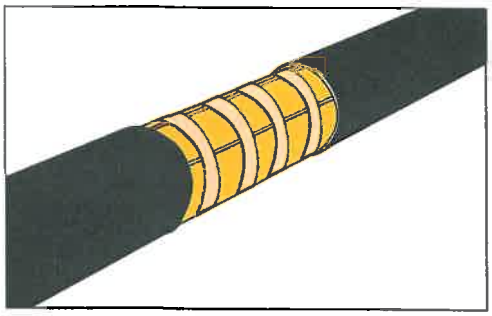

Appendix C

Manufacturer's Expansion Pad Installation Instructions

Appendix C

Manufacturer's Expansion Pad Installation Instructions

Expansion and anchorage
Establishing expansion zones with foam pads

Application

In a number of cases the use of foam pads has been replaced by sand pads.
However, the foam pad can be used to absorb expansion movements when the first movement does not exceed the following intervals:

- $10 < \Delta L \leq 35$ mm, 1 layer
- $35 < \Delta L \leq 70$ mm, 2 layers
- $70 < \Delta L \leq 105$ mm, 3 layers

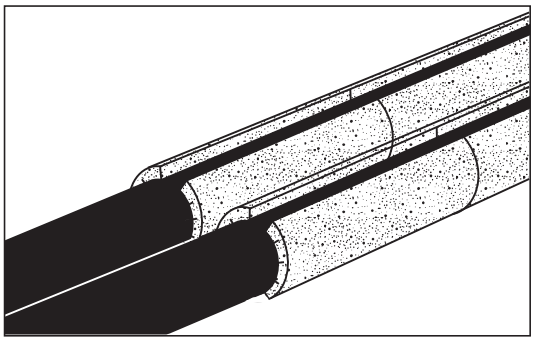

Square measure of foam pads

The foam pads are available in one size which is adjusted to the actual casing diameter.

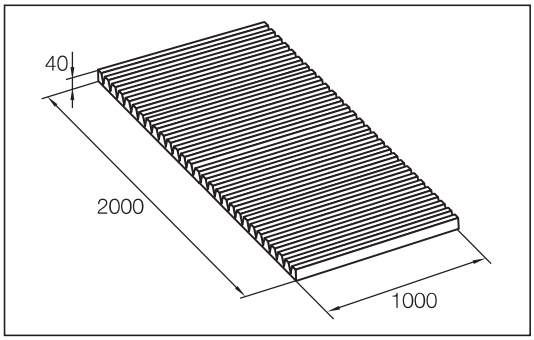

Actual foam pad measure

The casing diameter determines the height of the foam pad, which again determines the number of foam pads.

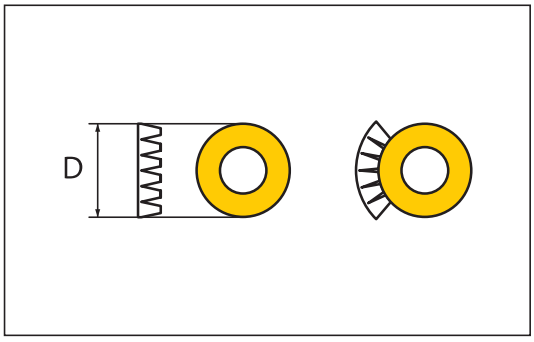

Installing foam pads

Install the pads on one or both sides of the outer casing in accordance with the project drawing.

In case of minor dimensions filament tape may be used to secure the pads.

For major dimensions and several layers it is recommended to wrap the pads in geotextile etc.

This prevents sand from entering between the foam pad and the outer casing, when backfilling the trench.

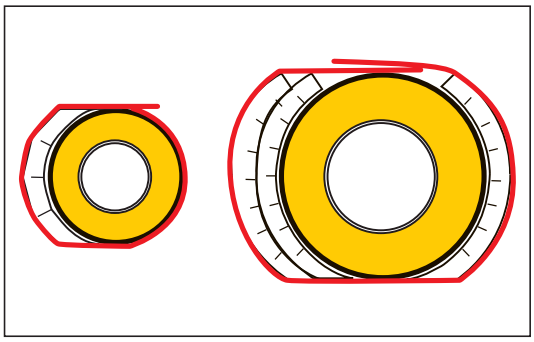

Expansion and anchorage
Establishing expansion zones with foam pads

The trench

When using foam pads the trench dimension must be increased in order to be able to absorb the movement from the pipes.
C = 1, 2 or 3 m
D = Total pad thickness: 40, 80 or 120 mm +200 mm
E = 150/250 mm according to section 1.2 Trench excavation

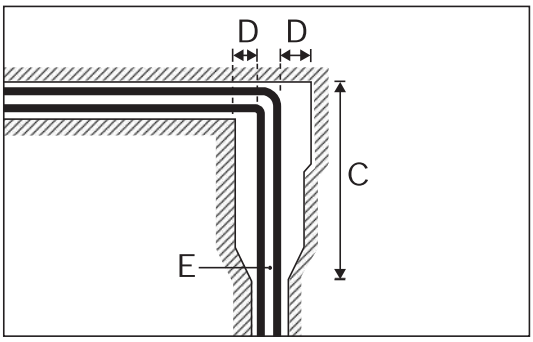

Position and number of foam pads

From the project drawing the position and number of foam pads to be used in the expansion zone will appear.

The number of pads is marked with lines at bends and branches.

In case there is no project drawing, see the number in the Design Manual or contact LOGSTOR.

NOTE! In connection with SteelJoints, the foam pads must not cover the sacrificial anodes.

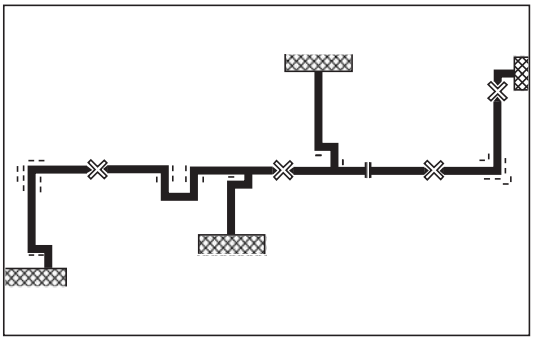

DULUTH ENERGY SYSTEMS
PROJECT #1601

HOT WATER DISTRIBUTION SYSTEM PLANT CONNECTION PHASE 1 & 2

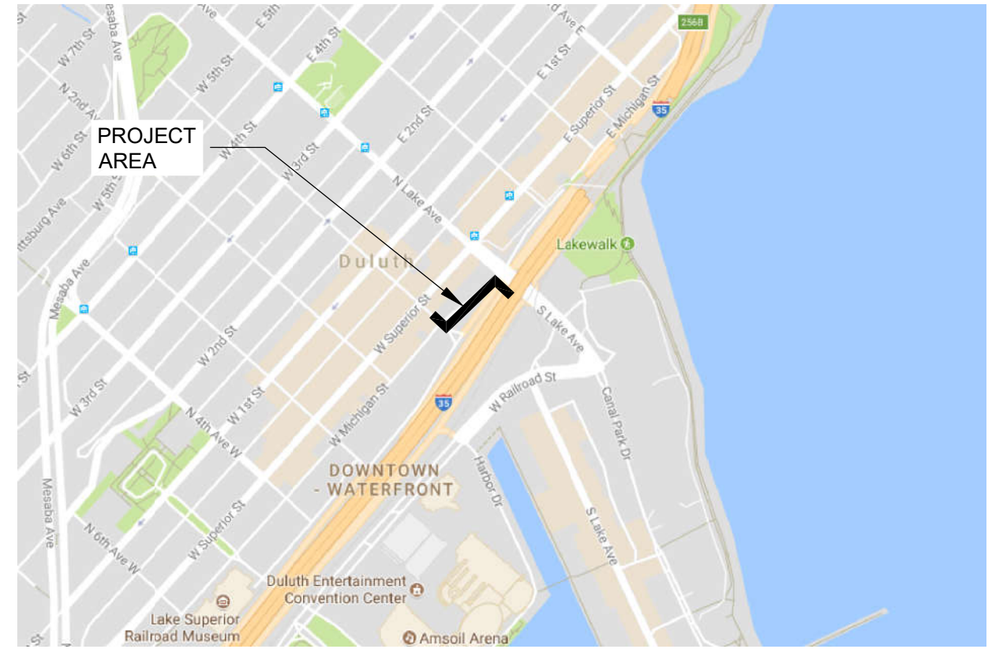

TABLE OF CONTENTS:

SHEET 1	TITLE SHEET
SHEETS 2-4	MICHIGAN STREET HOT WATER
SHEET 5	SURFACE IMPACTS
SHEETS 6-7	DETAILS
SHEET 8	CONDUIT & COMMUNICATIONS

EVER-GREEN ENERGY™

DULUTH ENERGY SYSTEMS

THE CITY OF DULUTH MINNESOTA

THE SUBSURFACE UTILITY INFORMATION SHOWN ON THESE DRAWINGS CONCERNING TYPE AND LOCATION OF PRIVATE UTILITIES HAS BEEN DESIGNATED UTILITY QUALITY LEVEL D. THESE QUALITY LEVELS WERE DETERMINED ACCORDING TO THE GUIDELINES OF CI/ASCE 38-02, ENTITLED "STANDARD GUIDELINES FOR THE COLLECTION AND DEPICTION OF EXISTING SUBSURFACE DATA". THE CONTRACTOR IS TO DETERMINE THE TYPE AND LOCATION OF PRIVATE UTILITIES AS MAY BE DEEMED NECESSARY TO AVOID DAMAGE THERETO.

I HEREBY CERTIFY THAT THIS PLAN, SPECIFICATION OR REPORT WAS PREPARED BY ME OR UNDER MY DIRECT SUPERVISION AND THAT I AM A DULY REGISTERED PROFESSIONAL ENGINEER UNDER THE LAWS OF MINNESOTA.

SEAN M. McFARLING, PE

DATE 7/28/17 REG. NO. 47062

REV.	DATE	PREP. BY	CHK'D BY	DESCRIPTION
A	7/28/17	RTG	SMM	IFB

EVER-GREEN ENERGY™ DULUTH ENERGY SYSTEMS THE CITY OF DULUTH MINNESOTA

DULUTH ENERGY SYSTEMS HOT WATER PLANT CONNECTION

DESIGN BY: SMM DATE: 7/28/17
DRAWN BY: RTG DATE: 7/28/17
VERT: 1"=10' HORZ: 1"=20'

TITLE SHEET

City Project No. 1601
Project No. EGE-0058

Sheet No. 1

\\dcserv\DUL\Projects\Duluth HW Distribution\HW Superior-Plant Connection\2 Design and Engineering\5 CAD\Title sheet.dwg

NOTES
1. PIPE STATIONING IS BASED ON SUPPLY PIPING
2. CONTRACTOR SHALL FOLLOW ALL GOPHER STATE ONE CALL REQUIREMENTS WHEN CROSSING EXISTING UTILITIES.
3. CROSSING UTILITIES SHOWN IN THE PROFILE ARE BASED ON THE BEST INFORMATION AVAILABLE. CONTRACTOR SHALL VERIFY ELEVATIONS PRIOR TO CROSSING.
4. BEDROCK LIMITS AND DEPTHS ARE SHOWN FOR REFERENCE ONLY. ROCK EXCAVATION LIMITS SHALL BE MEASURED ON SITE FOR QUANTITY DETERMINATION AND PAYMENT

EXPANSION PAD LEGEND

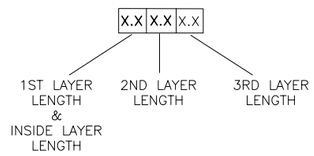

NOTES
1. SUPPLIED EXPANSION PADS ARE ONE (1) METER LONG AND FORTY (40) MILLIMETERS THICK. SOME PADS WILL NEED TO BE CUT TO LENGTH AND WIDTH
2. LENGTH OF LAYER IS SHOWN IN METERS (NUMBER OF PADS)

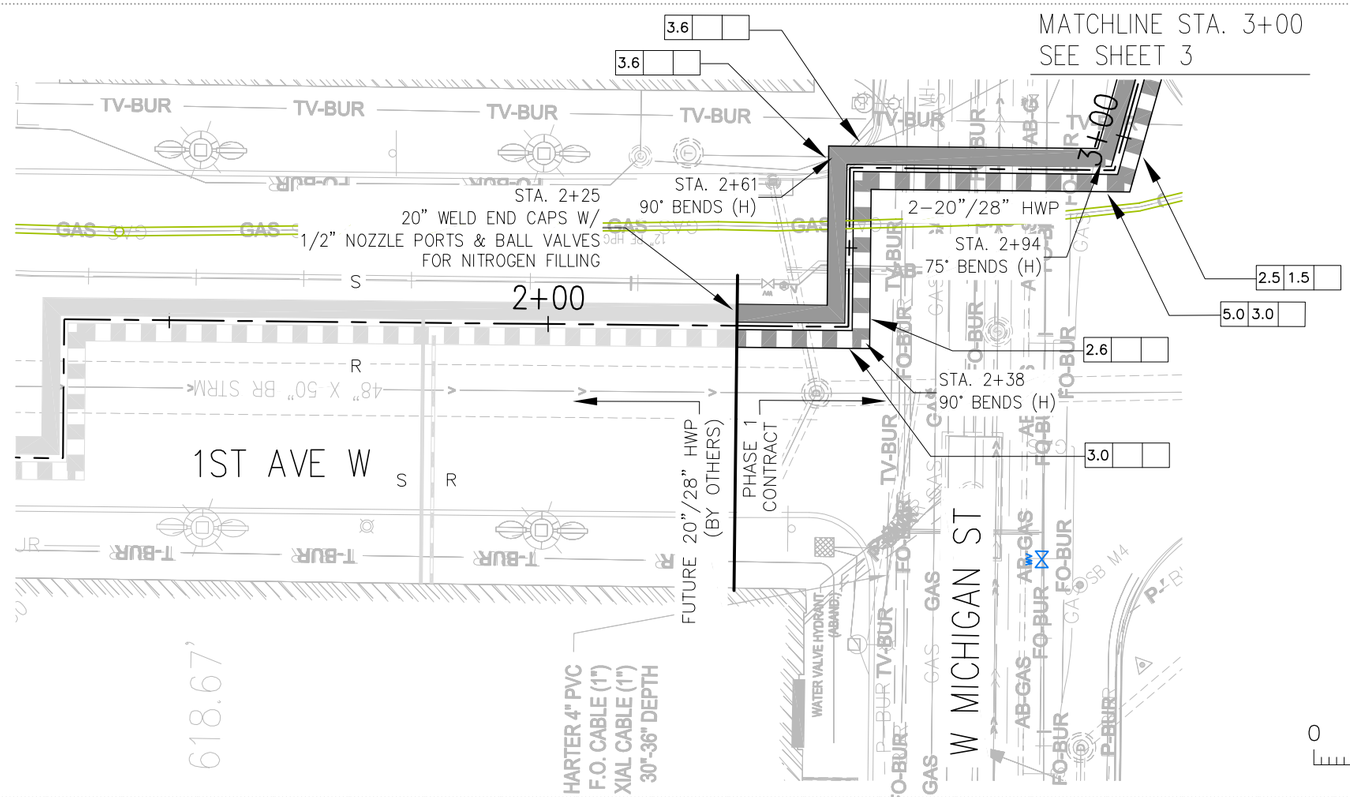

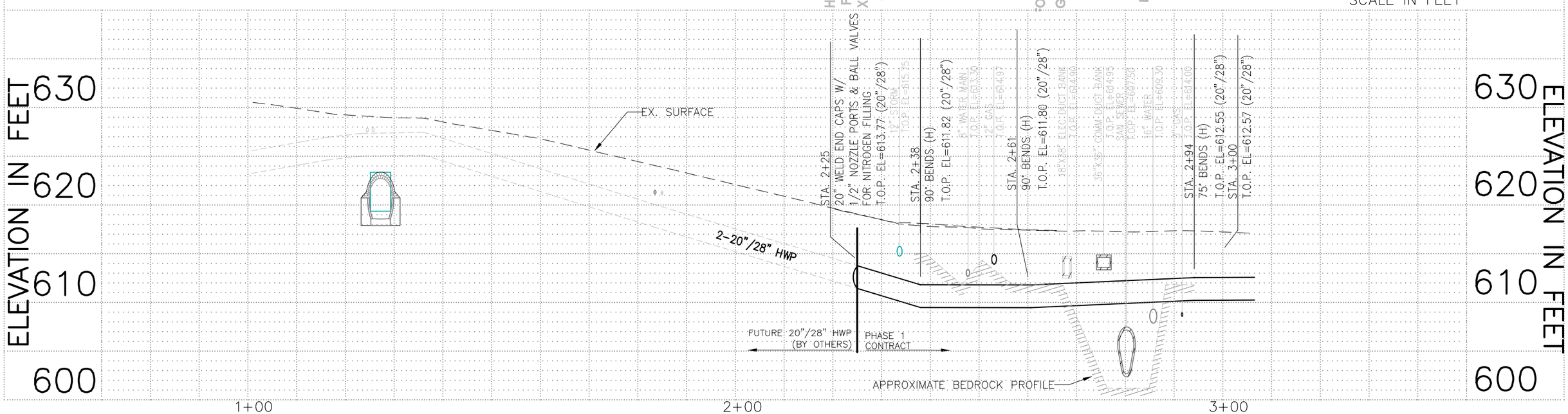

I HEREBY CERTIFY THAT THIS PLAN, SPECIFICATION OR REPORT WAS PREPARED BY ME OR UNDER MY DIRECT SUPERVISION AND THAT I AM A DULY REGISTERED PROFESSIONAL ENGINEER UNDER THE LAWS OF MINNESOTA.

SEAN M. McFARLING, PE

DATE 7/28/17 REG. NO. 47062

REV.	DATE	PREP. BY	CHK'D BY	DESCRIPTION
A	7/28/17	RTG	SMM	IFB

EVER-GREEN ENERGY™ DULUTH ENERGY SYSTEMS THE CITY OF DULUTH MINNESOTA

DULUTH ENERGY SYSTEMS HOT WATER PLANT CONNECTION

DESIGN BY: SMM DATE: 7/28/17
DRAWN BY: RTG DATE: 7/28/17
VERT: 1"=10' HORZ: 1"=20'

MICHIGAN STREET HOT WATER

City Project No. 1601
Project No. EGE-0058

Sheet No. 2

\\dcsrv\DULI\Projects\Duluth HW Distribution\HW Superior-Plant Connection\2 Design and Engineering\5 CAD\160811cPLAN_EGE.dwg

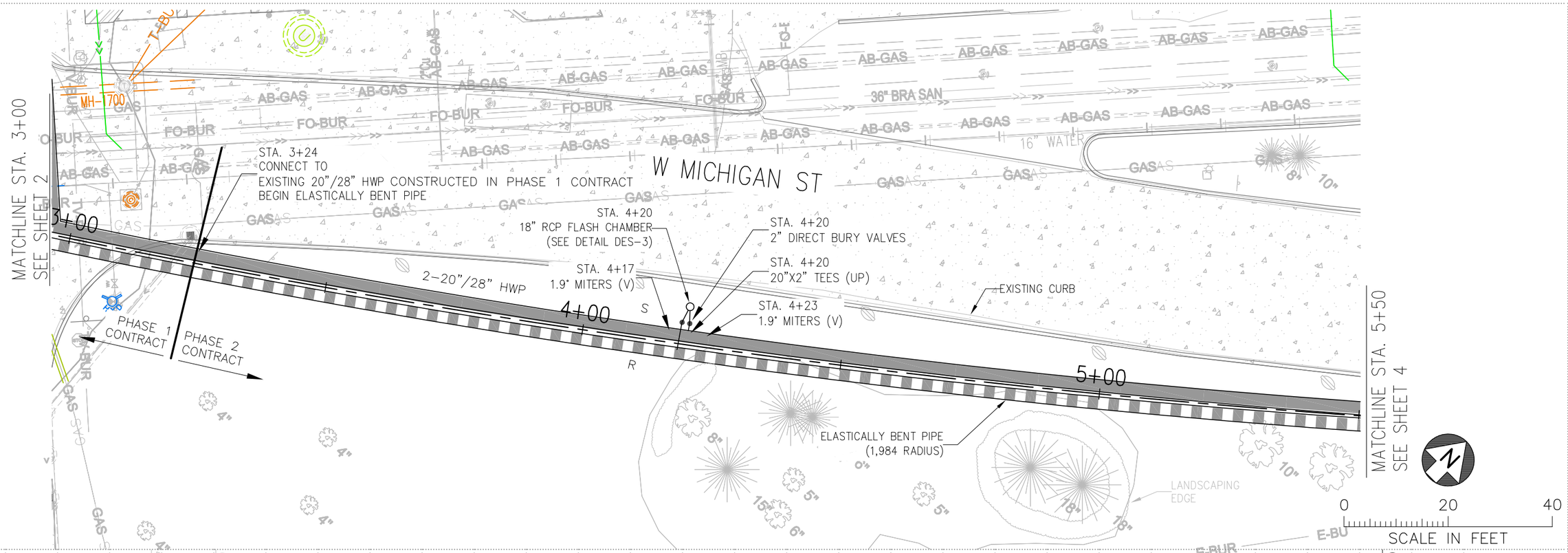

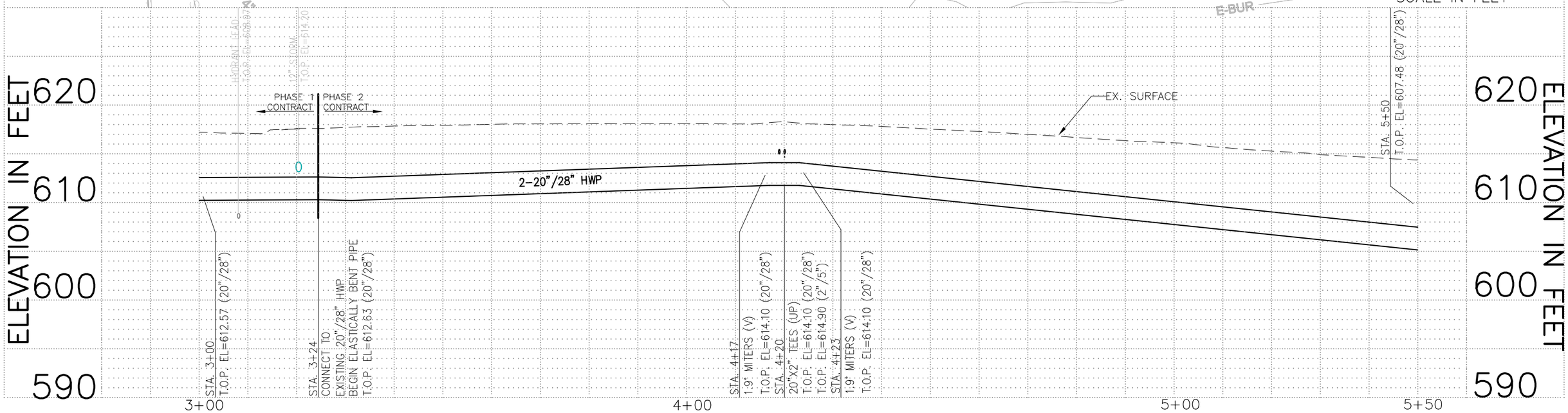

I HEREBY CERTIFY THAT THIS PLAN, SPECIFICATION OR REPORT WAS PREPARED BY ME OR UNDER MY DIRECT SUPERVISION AND THAT I AM A DULY REGISTERED PROFESSIONAL ENGINEER UNDER THE LAWS OF MINNESOTA.

SEAN M. McFARLING, PE

DATE 7/28/17 REG. NO. 47062

REV.	DATE	PREP. BY	CHK'D BY	DESCRIPTION
A	7/28/17	RTG	SMM	IFB

EVER-GREEN ENERGY™

DULUTH ENERGY SYSTEMS

THE CITY OF DULUTH MINNESOTA

DULUTH ENERGY SYSTEMS HOT WATER PLANT CONNECTION

DESIGN BY: SMM DATE: 7/28/17
DRAWN BY: RTG DATE: 7/28/17
VERT: 1"=10'
HORZ: 1"=20'

MICHIGAN STREET HOT WATER

City Project No. 1601
Project No. EGE-0058

Sheet No. 3

\\docserv\DUL\Projects\Duluth HW Distribution\HW Superior-Plant Connection\2 Design and Engineering\5 CAD\160811cPLAN_EGE.dwg

NOTES
1. CONTACT DULUTH ENERGY SYSTEMS IMMEDIATELY IF ASBESTOS CONTAINING MATERIAL OR ASSUMED ASBESTOS CONTAINING MATERIAL IS ENCOUNTERED. ANY REMEDIATION NECESSARY WILL BE PERFORMED BY A THIRD PARTY UNDER CONTRACT WITH DES
2. A DES REPRESENTATIVE SHALL BE PRESENT AT ALL TIMES WHEN WORK IS PERFORMED AROUND ACTIVE STEAM FACILITIES. CONTRACTOR SHALL PROVIDE DES 48 HOURS NOTICE PRIOR TO ANY WORK AROUND EXISTING STEAM PIPES

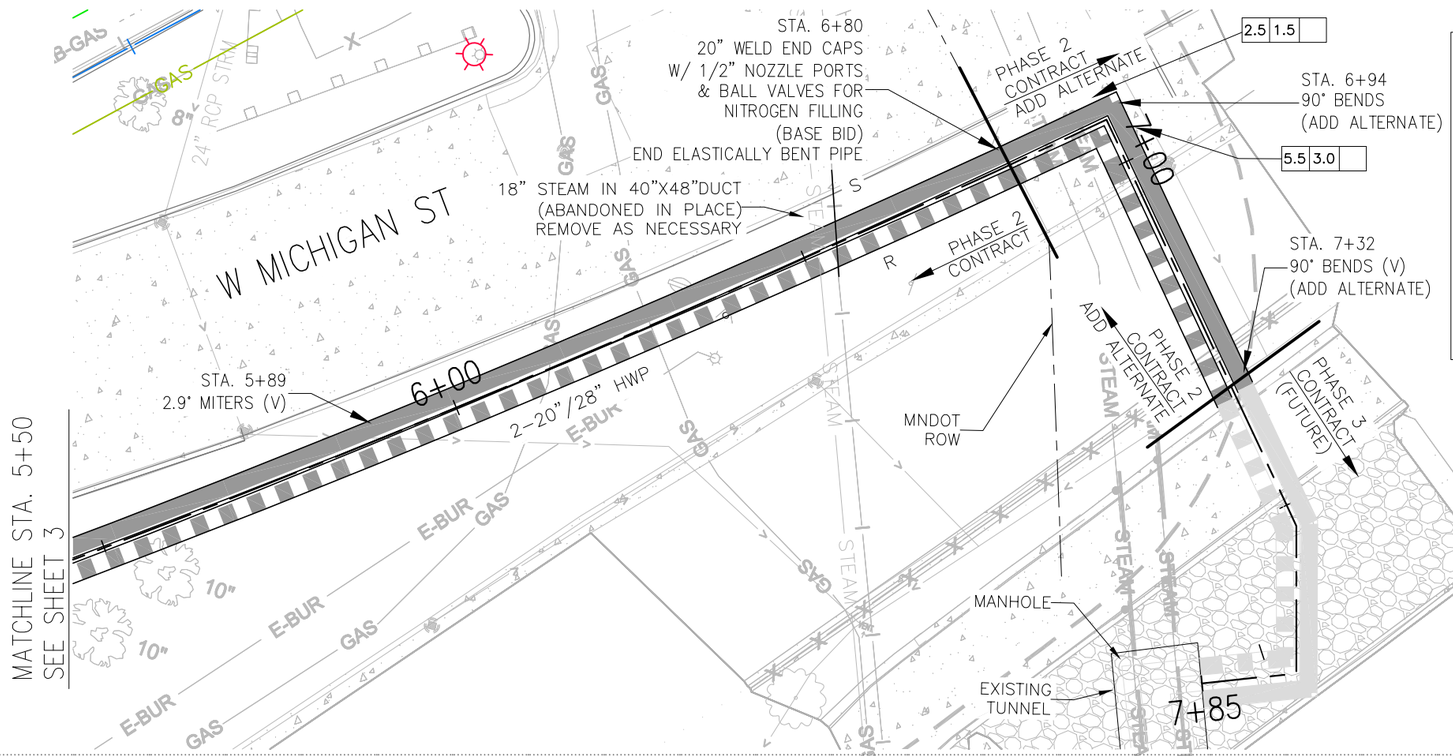

EXPANSION PAD LEGEND

X.X | X.X | X.X

1ST LAYER LENGTH & INSIDE LAYER LENGTH — 2ND LAYER LENGTH — 3RD LAYER LENGTH

NOTES
1. SUPPLIED EXPANSION PADS ARE ONE (1) METER LONG AND FORTY (40) MILLIMETERS THICK. SOME PADS WILL NEED TO BE CUT TO LENGTH AND WIDTH
2. LENGTH OF LAYER IS SHOWN IN METERS (NUMBER OF PADS)

N

0 20 40
SCALE IN FEET

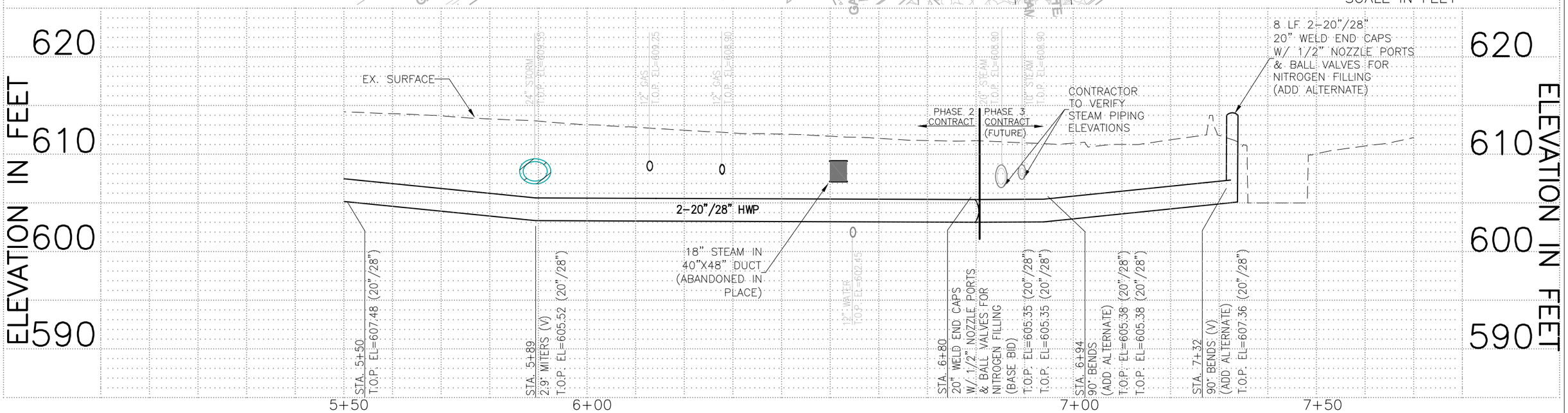

I HEREBY CERTIFY THAT THIS PLAN, SPECIFICATION OR REPORT WAS PREPARED BY ME OR UNDER MY DIRECT SUPERVISION AND THAT I AM A DULY REGISTERED PROFESSIONAL ENGINEER UNDER THE LAWS OF MINNESOTA.

SEAN M. McFARLING, PE

DATE 7/28/17 REG. NO. 47062

REV.	DATE	PREP. BY	CHK'D BY	DESCRIPTION
A	7/28/17	RTG	SMM	IFB

EVER-GREEN ENERGY™ — DULUTH ENERGY SYSTEMS — THE CITY OF DULUTH MINNESOTA

DULUTH ENERGY SYSTEMS HOT WATER PLANT CONNECTION

DESIGN BY: SMM DATE: 7/28/17
DRAWN BY: RTG DATE: 7/28/17
VERT: 1"=10' HORZ: 1"=20'

MICHIGAN STREET HOT WATER

City Project No. 1601
Project No. EGE-0058

Sheet No. 4

\\docserv\DUL\Projects\Duluth HW Distribution\HW Superior-Plant Connection\2 Design and Engineering\5 CAD\160811cPLAN_EGE.dwg

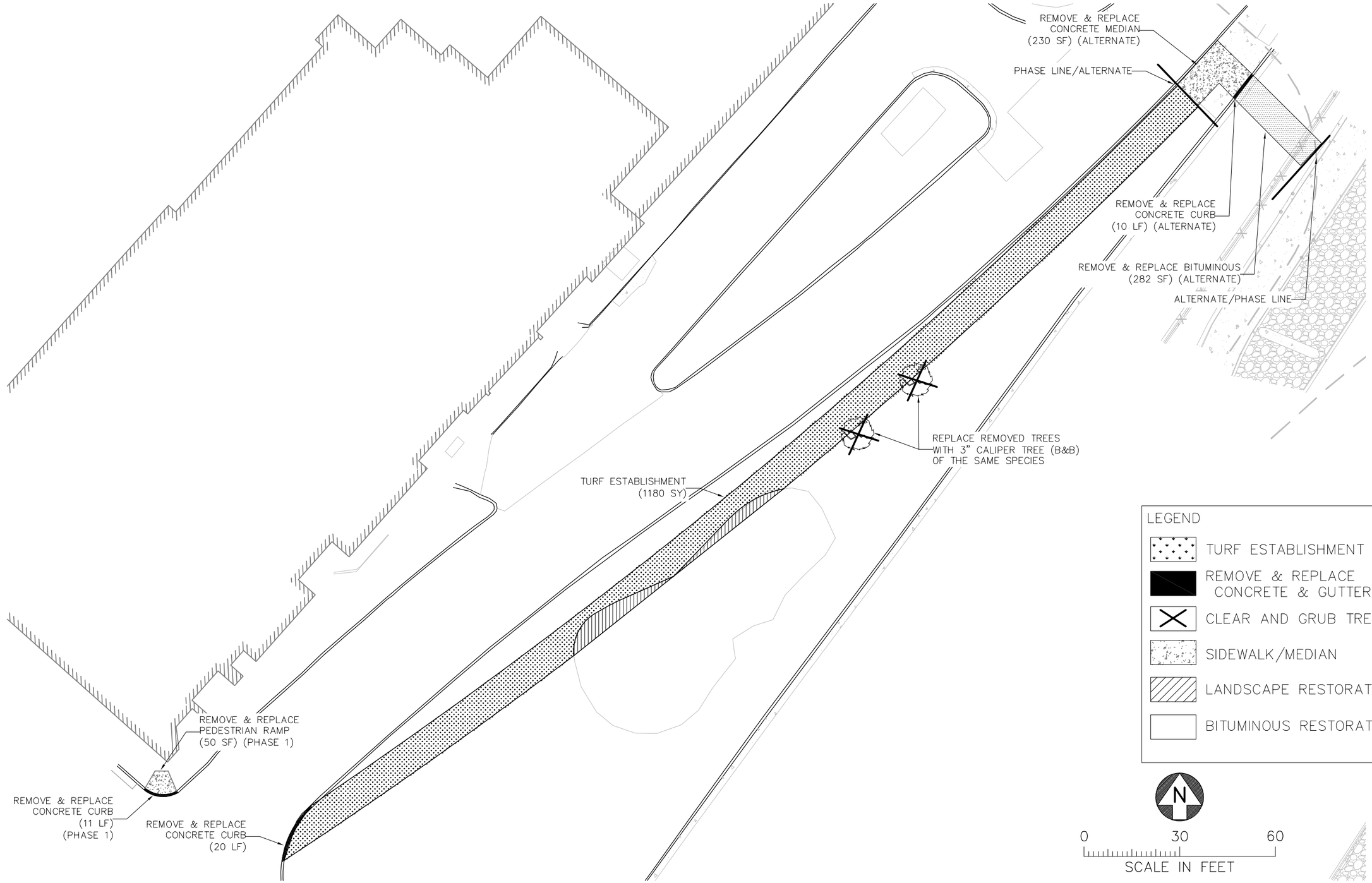

I HEREBY CERTIFY THAT THIS PLAN, SPECIFICATION OR REPORT WAS PREPARED BY ME OR UNDER MY DIRECT SUPERVISION AND THAT I AM A DULY REGISTERED PROFESSIONAL ENGINEER UNDER THE LAWS OF MINNESOTA.

SEAN M. McFARLING, PE

DATE 7/28/17 REG. NO. 47062

REV.	DATE	PREP. BY	CHK'D BY	DESCRIPTION
A	7/28/17	RTG	SMM	IFB

EVER-GREEN ENERGY™ DULUTH ENERGY SYSTEMS THE CITY OF DULUTH MINNESOTA

DULUTH ENERGY SYSTEMS HOT WATER PLANT CONNECTION

DESIGN BY: SMM DATE: 7/28/17
DRAWN BY: RTG DATE: 7/28/17
HORZ: 1"=30'

SURFACE IMPACTS

City Project No. 1601
Project No. EGE-0058

Sheet No. 5

\\docserv\DULI\Projects\Duluth HW Distribution\HW Superior-Plant Connection\2 Design and Engineering\5 CAD\Surface Impacts.dwg

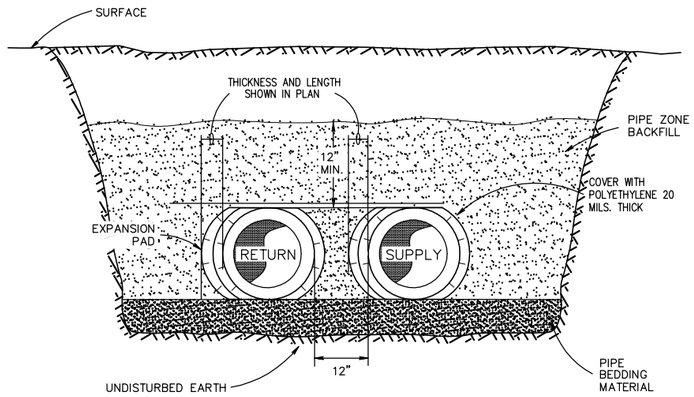

NOTES:
1. PIPE BACKFILL OR BEDDING MATERIAL TO FILL VOID UNDER PIPES.
2. EXPANSION PADS TO BE INSTALLED WHERE SHOWN IN PLANS OR AS DIRECTED BY ENGINEER.
3. CUT EXPANSION PADS TO MATCH JACKET DIAMETER
4. THICKER EXPANSION PAD SIDE TO BE INSTALLED ON SIDE WHERE THERMAL EXPANSION OCCURS

EXPANSION PAD INSTALLATION DETAIL
(DES–1)

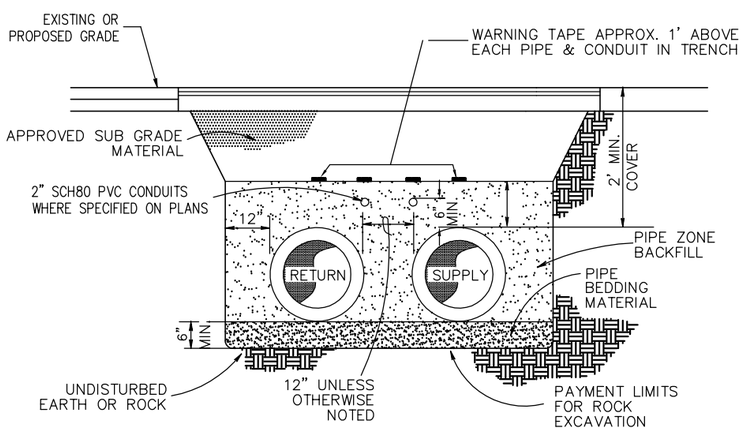

NOTES:

1. TRENCH BACKFILL MATERIAL ABOVE THE PIPE ZONE, BUT BELOW THE CLASS V AGGREGATE BASE IN THE STREET SECTION, SHALL MEET THE MATERIAL REQUIREMENTS OF THE STREET SUB BASE. A SEPARATE PROCTOR AND COMPACTION TEST SHALL BE PERFORMED ON MATERIAL DIFFERING FROM PIPE ZONE BACKFILL MATERIAL .
2. RECYCLED OR CRUSHED AGGREGATE IS NOT ACCEPTABLE AS PIPE ZONE BACKFILL OR PIPE BEDDING MATERIAL
2. MAXIMUM 10% CRUSHED MATERIALALLOWED IN PIPE BEDDING OR BACKFILL MATERIAL.

TYPICAL TRENCH DETAIL
(DES–1)

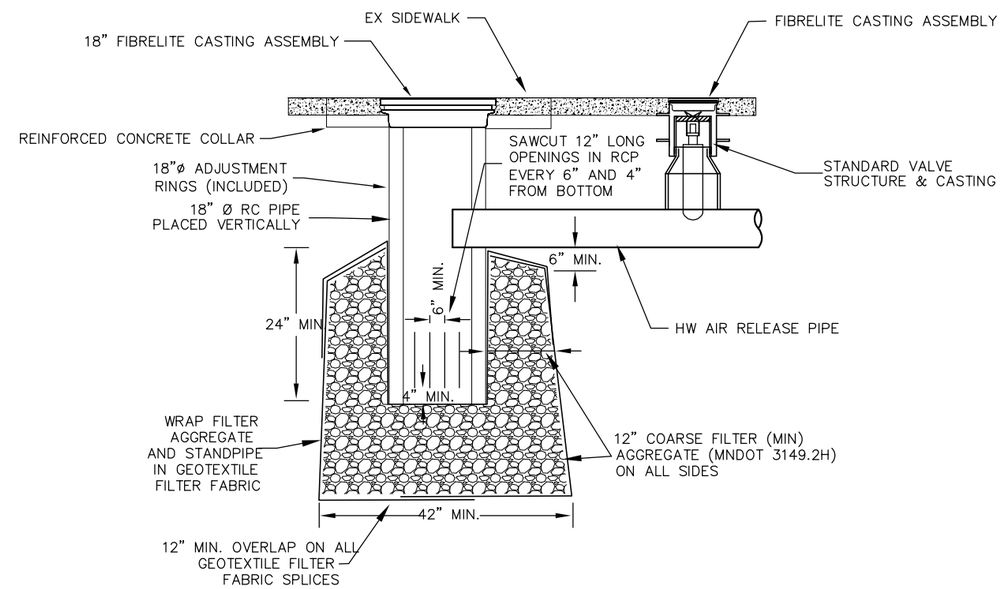

18" RCP DRAIN STRUCTURE DETAIL
(DES–3)

I HEREBY CERTIFY THAT THIS PLAN, SPECIFICATION OR REPORT WAS PREPARED BY ME OR UNDER MY DIRECT SUPERVISION AND THAT I AM A DULY REGISTERED PROFESSIONAL ENGINEER UNDER THE LAWS OF MINNESOTA.

SEAN M. McFARLING, PE

DATE 7/28/17 REG. NO. 47062

REV.	DATE	PREP. BY	CHK'D BY	DESCRIPTION

EVER-GREEN ENERGY™ DULUTH ENERGY SYSTEMS

DULUTH ENERGY SYSTEMS HOT WATER PLANT CONNECTION

DESIGN BY: SMM DATE: 7/28/17
DRAWN BY: RTG DATE: 7/28/17
HORZ: N.T.S.

DETAILS

City Project No. 1601
Project No. EGE–0058

Sheet No. 6

\\docserv\DUL\Projects\Duluth HW Distribution\HW Superior-Plant Connection\2 Design and Engineering\5 CAD\Details.dwg

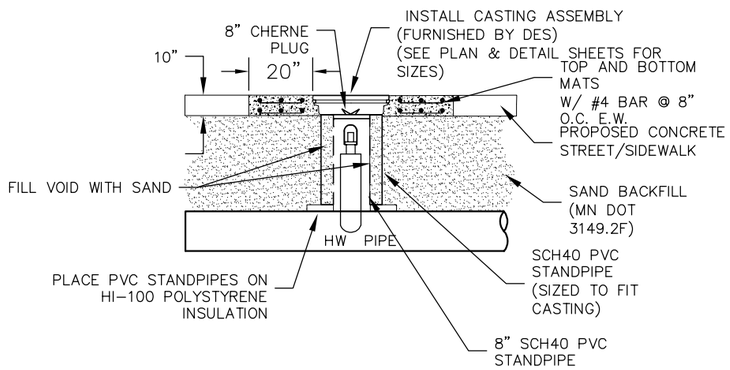

VALVE ACCESS STRUCTURE SECTION DETAIL (DES-5)

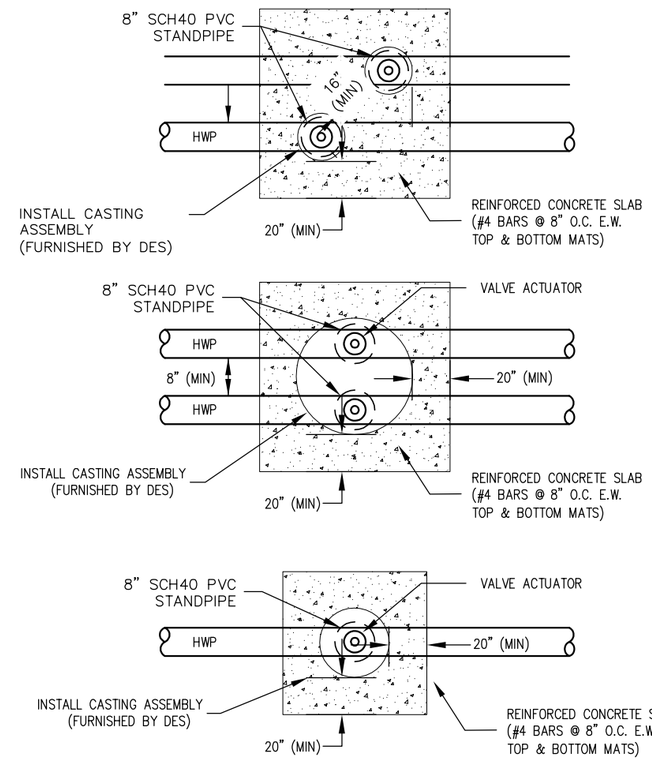

NOTES:
1. DES SHALL FURNISH CASTING ASSEMBLIES, ALL OTHER MATERIALS TO BE PROVIDED BY CONTRACTOR
2. DIMENSIONS SHOWN ARE MINIMUM FOR CLEARANCES. THE CONTRACTOR IS TO VERIFY ALL DIMENSIONS BASED ON INSTALLED PIPE LOCATION IN THE FIELD.
3. CASTINGS SHALL BE POSITIONED OVER VALVE ACTUATORS TO PROVIDE MAXIMUM THERMAL EXPANSION TRAVEL SPACE.

VALVE ACCESS STRUCTURES DETAIL (DES-6)

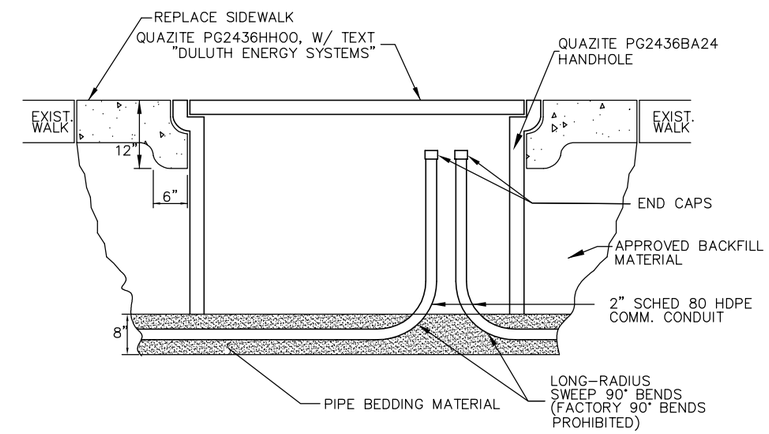

NOTES:
1. END CAPS ON CONDUITS SHALL BE LABELED FOR IDENTIFICATION
2. HANDHOLES TO BE INSTALLED IN SIDEWALK OR GRASSY AREAS IN THE LOCATION SHOWN ON THE PLANS, OR AS DIRECTED BY THE ENGINEER. HANDHOLES WILL NOT BE ALLOWED TO BE PLACED UNDER TRAFFIC.

HANDHOLE & COMMUNICATION DETAIL (DES-7)

I HEREBY CERTIFY THAT THIS PLAN, SPECIFICATION OR REPORT WAS PREPARED BY ME OR UNDER MY DIRECT SUPERVISION AND THAT I AM A DULY REGISTERED PROFESSIONAL ENGINEER UNDER THE LAWS OF MINNESOTA.

SEAN M. McFARLING, PE

DATE 7/28/17 REG. NO. 47062

REV.	DATE	PREP. BY	CHK'D BY	DESCRIPTION
A	7/28/17	RTG	SMM	IFB

EVER-GREEN ENERGY™ DULUTH ENERGY SYSTEMS THE CITY OF DULUTH MINNESOTA

DULUTH ENERGY SYSTEMS HOT WATER PLANT CONNECTION

DESIGN BY: SMM DATE: 7/28/17
DRAWN BY: RTG DATE: 7/28/17
HORZ: N.T.S.

DETAILS

City Project No. 1601
Project No. EGE 0058

Sheet No. 7

\\docserv\DULUTH\Projects\Duluth HW Distribution\HW Superior-Plant Connection\2 Design and Engineering\5 CAD\Details.dwg

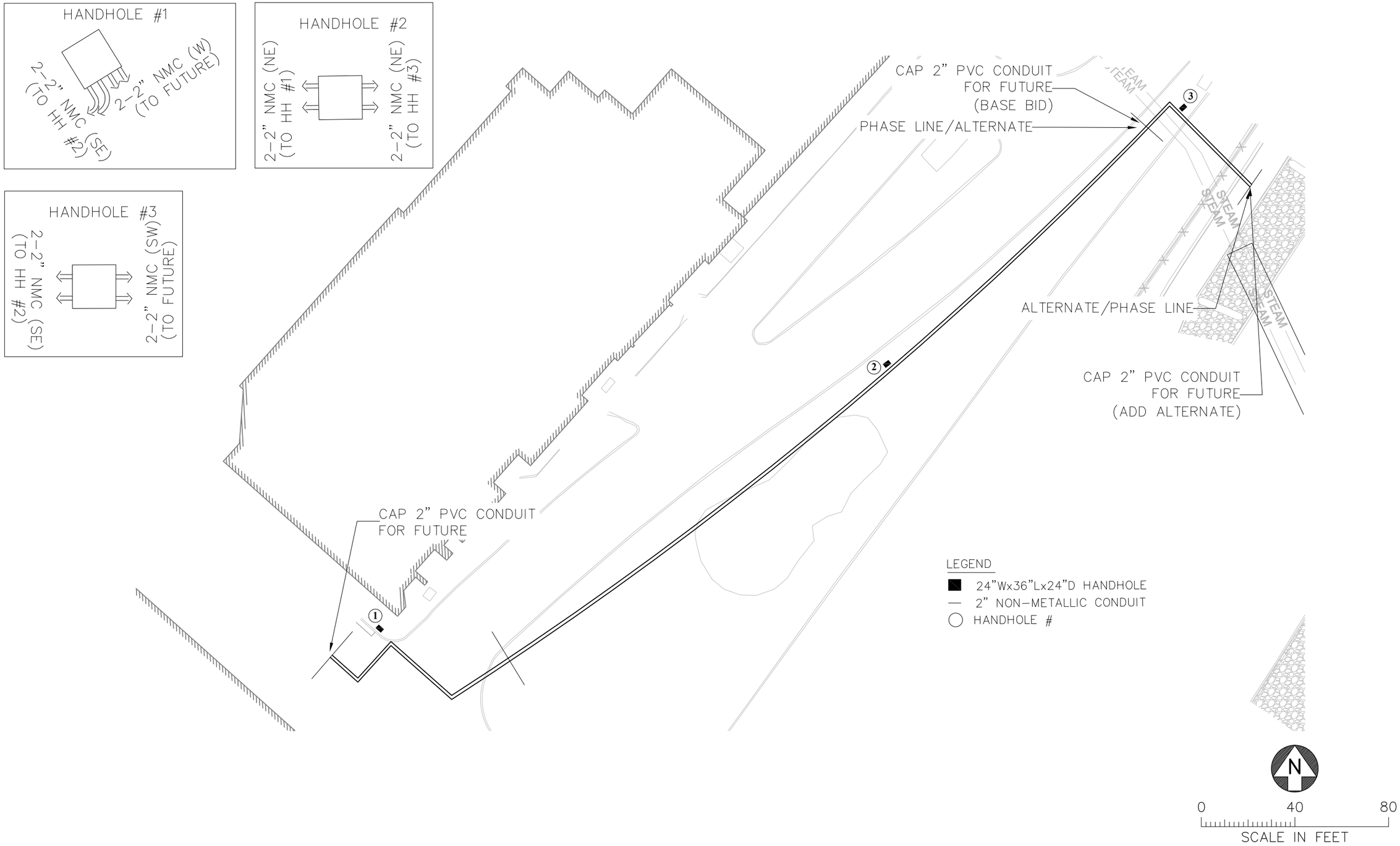

I HEREBY CERTIFY THAT THIS PLAN, SPECIFICATION OR REPORT WAS PREPARED BY ME OR UNDER MY DIRECT SUPERVISION AND THAT I AM A DULY REGISTERED PROFESSIONAL ENGINEER UNDER THE LAWS OF MINNESOTA.

SEAN M. McFARLING, PE

DATE 7/28/17 REG. NO. 47062

REV.	DATE	PREP. BY	CHK'D BY	DESCRIPTION
A	7/28/17	RTG	SMM	IFB

EVER-GREEN ENERGY™ DULUTH ENERGY SYSTEMS THE CITY OF DULUTH MINNESOTA

DULUTH ENERGY SYSTEMS HOT WATER PLANT CONNECTION

DESIGN BY: SMM DATE: 7/28/17
DRAWN BY: RTG DATE: 7/28/17
HORZ: 1"=40'

CONDUIT & COMMUNICATIONS

City Project No. 1601
Project No. EGE-0058

Sheet No. 8

\\dcserv\DUL\Projects\Duluth HW Distribution\HW Superior-Plant Connection\2 Design and Engineering\5 CAD\Conduit.dwg