INVITATION TO BID

Stewart Creek Bridge Restoration

Clyde Trail, near 95th Ave W. and Clyde Street, Duluth, MN

POSTED: AUGUST 1, 2017

Bid #: 17-0474

BIDS DUE: Thursday, August 17, 2017 @ 2:00 PM CST

Parks and Recreation
411 W. 1st Street, Ground Floor
Duluth, MN 55802

TABLE OF CONTENTS

BIDDING INFORMATION & FORMS

INVITATION TO BID & INSTRUCTIONS TO BIDDERS
ADDITIONAL CONDITIONS
BID FORM WITH EXHIBIT A
PROMPT PAYMENT TO SUBCONTRACTORS
RESPONSIBLE CONTRACTOR VERIFICATION
AFFIDAVIT OF NON-COLLUSION
EQUAL EMPLOYMENT OPPORTUNITY (EEO) POLICY STATEMENT & COMPLIANCE CERTIFICATE

CONDITIONS OF CONTRACT

DRAFT CONSTRUCTION CONTRACT
CITY OF DULUTH - PART II - SUPPLEMENTARY GENERAL CONDITIONS FOR FEDERALLY, STATE OF MINNESOTA, AND/OR CITY ASSISTED ACTIVITIES
PAYMENT & PERFORMANCE BONDS
PREVAILING WAGE RATES
PROJECT LABOR AGREEMENT

PLANS & SPECIFICATIONS

Purchasing Division
100 City Hall, 411 W. 1st Street
Duluth, MN 55802-1189
TEL. 218-730-5340
purchasing@duluthmn.gov

INVITATION TO BID

STEWART CREEK BRIDGE RESTORATION

BID NUMBER: **17-0474** **BID OPENING: Thursday, August 17, 2017 AT 2:00 PM**

PROJECT DESCRIPTION: The base portion of this project involves the rehabilitation of the Stewart Creek Bridge and removal of a dilapidated timber trestle bridge, both of which are bridges on the DWP Trail in Duluth, MN. Add/alternate bid items include DWP Trail grading improvements at the site of the timber trestle bridge as well as the rehabilitation of an existing concrete culvert under the DWP Trail and located just east of the Stewart Creek Bridge. Project work involves the removal and disposal of the existing treated deck material and railings on both the Stewart Creek Bridge and the timber trestle, repairs to the concrete footings/pedestals supporting the Stewart Creek Bridge, and constructing a new deck and railing system on the bridge.

The first add/alternate item includes grading work on the DWP Trail in each direction from the location of the timber trestle bridge being demolished as a part of the base bid. The additional grading may be beneficial to create access to the Stewart Creek Bridge from the west side for constructing the deck and rail improvements, and is meant to restore trail grades to ABA-compliant slopes once the timber trestle has been demolished. The second add/alternate item includes rehabilitating an existing concrete culvert under the DWP Trail by bypassing stream flows to allow for cleaning debris from the floor of the culvert and placing a concrete overlay in its floor.

PRE-BID/WALK-THROUGH: A pre-bid walk-through will be conducted on August 10, 2017 at 2:30 pm beginning at 95th Avenue West and Clyde Avenue in Duluth, MN. All interested bidders are *strongly* encouraged to attend.

QUESTIONS: Please submit any questions regarding this project via e-mail to purchasing@duluthmn.gov. Responses will be issued as an addendum to this solicitation.

The selected contractor will be issued a construction contract (draft attached). Notice to Proceed will be issued once the agreement is fully executed.

Proposal forms, contract documents, plans and specifications are on file at the following offices: Duluth Builder's Exchange, Minnesota Builder's Exchange, BXWI-Fox Valley Plan Room, and Blue Book Building and Construction Network.

INSTRUCTIONS TO BIDDERS

All bids must be complete, signed, and transmitted in a sealed envelope plainly marked with the bid number, subject matter, and opening date.

Bids may be mailed to the Purchasing Office, City Hall, 411 West 1st Street, Room 100, Duluth, MN 55802 or dropped off in person at the same address.

Bids must be received in Purchasing before 2:00 PM local time on the bid opening date specified on the Invitation for Bids. The City Purchasing Agent or her designee will conduct a public bid opening in Room 100 immediately following receipt of the bids. Once all bids have been reviewed, bid results will be posted online at http://www.duluthmn.gov/purchasing/bids-request-for-proposals/.

No alternatives to the specification will be considered unless specifically requested. Erasures or other changes to the bid must be initialed and dated, however no special conditions shall be made or included in the bid form by the bidder.

The City of Duluth reserves the right to split the award where there is a substantial savings to the City, to waive informalities and to reject any and all bids. Do not include sales tax in the unit price. Price may not be the only consideration for bid award. Bids must be firm for a minimum of 30 days.

The following documents must be submitted with your bid:

1. **Bid Bond** - A certified check or bank draft, payable to the order of the City of Duluth, negotiable U.S. Government Bonds (at par value), or a satisfactory bid bond executed by the bidder and acceptable surety, in an amount equal to five per cent (5%) of the total bid. Bids may be withdrawn without forfeiture of surety if the request is submitted by the Bidder and received at the Purchasing Office in writing or by e-mail prior to the scheduled bid opening.

2. **Acknowledgment of Addendum –** any changes to this solicitation will be announced via Addendum. Bidders must indicate that they have reviewed any addendum(s) by initialing and dating on the bid form where indicated. Failure to acknowledge addendum(s) may result in your bid being deemed non-responsive.

3. **Responsible Contractor** - No construction contract in excess of $50,000 will be awarded unless the Bidder is a "responsible contractor" as defined in Minnesota Statute §16C.285, subdivision 3. All Bidders submitting a proposal for this project must verify that they meet the minimum criteria specified in the statute by submitting a Responsible Contractor Verification and Certification of Compliance form (attached) with their bid. The owner or officer of the company must sign the form under oath verifying compliance with each of the minimum criteria. Making a false statement under oath will render the Bidder or subcontractor that makes the false statement ineligible to be awarded a construction project and may result in termination of a contract awarded to a Bidder or subcontractor that submits a false statement. Bidders must obtain verification of compliance from all subcontractors. Bidders must submit signed copies of verifications and certifications of compliance from subcontractors at the City's request.

Please note that the following requirements also apply to this project, and any additional required documents must be submitted prior to award/contract execution. Submitting these documents with your bid will assist in expediting the process.

1. **Insurance** – Contractor must provide proof of Public Liability and Automobile Liability Insurance with limits not less than $1,500,000 Single Limit prior to the commencement of work. The City of Duluth must be named as an additional insured. Please refer to the draft Contract, Section 7.

2. **Affidavit of Non-Collusion** – The successful bidder shall be required to execute the attached affidavit stating that he/she has not entered into a collusive agreement with any other person, firm, or corporation in regard to any bid submitted.

3. **Performance & Payment Bonds** – The awarded contractor will be required to submit performance and payments bonds in the full amount of the project cost prior to award.

4. **Affirmative Action/EEO** - The contractor must take affirmative action to ensure that the employees and applicants for employment are not discriminated against because of their race, color, creed, sex or national origin, and must meet the affirmative action goals. Contractors are encouraged to subcontract with Disadvantaged Business Enterprises (DBEs) when possible. A current list of certified DBEs is available on the Minnesota Unified Certification website at http://mnucp.metc.state.mn.us . Contractor will comply with all applicable Equal Employment Opportunity laws and regulations. Awarded contractor will submit the attached Equal Employment Opportunity (EEO) Affirmative Action Policy Statement & Compliance Certificate.

5. **Project Labor Agreement (PLA)** - A PLA will be required for any bid that is over or could virtually go over $150,000. A copy of the City standard PLA is included in this package.

6. **Out of State Contractor** - Unless a State of Minnesota Certificate of Exemption is provided, any out-of-state bidder receiving a bid award will have 8% retained from invoice payments on any contracts over $50,000. Submit a signed copy of the signed exemption form when submitting Payment and Performance

Bonds. This form may be found at: http://www.revenue.state.mn.us/Forms_and_Instructions/sde.pdf

7. **Prevailing Wage** - Not less than the minimum salaries and prevailing wages as set forth in the contract documents must be paid on this project.

The City of Duluth is an Equal Opportunity Employer. Contractor shall comply with all applicable Equal Employment Opportunity laws and regulations.

CITY OF DULUTH

Amanda Ashbach
Purchasing Agent

CITY OF DULUTH
ADDITIONAL CONDITIONS FOR 17-0474 STEWART CREEK BRIDGE RESTORATION

The awarded Contractor shall comply with the following additional conditions:

1. Invoicing

All invoices shall be itemized and include the following information:

a. Name and address of Contractor
b. Name of invoice recipient and organization (City of Duluth)
c. Date of purchase or work
d. Description of item(s) or work purchased
e. Quantity of item(s) or work purchased
f. Unit price for each item
g. Total amount spent for each item

2. Permits

All applicable permits shall be obtained by the Contractor and turned in to the City Project Coordinator before work related to the permit commences.

3. Invasive Species Prevention

The Minnesota Department of Natural Resources (MNDNR) requires grantees (the City) and Contractors to take active steps to prevent or limit the introduction, establishment, and spread of invasive species during contracted work. Contractors and subcontractors shall prevent invasive species from entering into, spreading within, or leaving a project site by performing the following preventive measures:

a. Contractor will clean equipment prior to arriving at the project site.

b. Contractor shall inspect all equipment, vehicles, gear, and/or clothing at the project site for soil, aggregate material, mulch, vegetation (including seeds) or animals upon arrival to the job site and prior to leaving the job site. If any soil, aggregate material, mulch, vegetation (including seeds) or animals are found, they must be removed/cleaned using a contractor-furnished brush or broom, compressed air or a pressure washer at the staging area. The contractor shall dispose of material cleaned from equipment and clothing onsite. If the material cannot be disposed of onsite, secure material prior to transport in a sealed container, covered truck, or wrap the material with a tarp and legally dispose of the material offsite.

c. Contractor shall ensure that all equipment and clothing used for work in infested waters has been adequately decontaminated for invasive species (ex. Zebra mussels) prior to being used in non-infested waters. All equipment and clothing including but not limited to waders, tracked vehicles, barges, boats, turbidity curtain, sheet pile, and pumps that come in contact with any infested waters must be thoroughly decontaminated.

d. When moving materials:

   i. Do not plant or introduce prohibited or regulated invasive species or other invasive species as listed on the MNDNR website (http://www.dnr.state.mn.us/invasives/dnrlands.html) and in the MNDNR's Operational Order 113 Invasive Species List (http://files.dnr.state.mn.us/assistance/grants/habitat/heritage/oporder_113.pdf see page 2).

ii. Use only mulch, soil, gravel, etc. that is invasive species-free or has a very low likelihood of having invasive species. When possible, use certified weed-free products such as weed-free seed or hay.

iii. Inspect transplanted vegetation for signs of any other plant material and/or animals, that may be attached to the vegetation and remove any that are found.

iv. Do not move soil or raw wood products that may harbor invasive species from infested sites.

e. Parking, staging areas, and travel routes shall not be within areas known to have infestations of invasive species.

BID FORM
BID # 17-0474
STEWART CREEK BRIDGE RESTORATION

ITEM	PRICE
Base Bid	$
Alternate 1 – Grading DWP Trail by Removed Trestle	$
Alternate 2 – Culvert Repair	$
TOTAL (enter this amount in writing below)	$

_____
TOTAL PRICE IN WRITING

ACKNOWLEDGMENT OF ADDENDA

ADDENDUM # _____ INITIAL/DATE _____

ADDENDUM # _____ INITIAL/DATE _____

ADDENDUM # _____ INITIAL/DATE _____

ADDENDUM # _____ INITIAL/DATE _____

Signature _____ Date _____

Name/Title _____

Company Name _____

Address _____

City, State, Zip _____

Tel. _____ E-Mail _____

If your organization is certified as a Disadvantaged Business Enterprise, please check here: ☐

Revised 6.3.16

EXHIBIT A to Bid Form
17-0474 Stewart Creek Bridge Restoration

BASE BID							
LINE NO.	NOTE NO.*	MN DOT SPEC NO.	ITEM DESCRIPTION	UNIT OF MEASURE	ESTIMATED QUANTITY	UNIT PRICE	TOTAL
1		2021.501	MOBILIZATION	Lump Sum	1	$	$
2	1	2101.501	CLEARING (BRUSH)	Acre	0.7	$	$
3	2	2101.502	CLEARING (4" OR GREATER)	Tree	12	$	$
4	7	2105.602	GRAVEL ENTRANCE RESTORATION	Lump Sum	1	$	$
5		2401.602	REPAIR CONCRETE PEDESTAL	Each	3	$	$
6		2403.601	TIMBER BRIDGE DECK	Lump Sum	1	$	$
7		2403.603	BRIDGE RAILING	Linear Foot	484 (P)	$	$
8		2403.603	TIMBER LEAD-IN RAILING	Linear Foot	64 (P)	$	$
9		2433.507	REMOVE REGULATE WASTE MATERIAL (BRIDGE)	Lump Sum	1	$	$
10		2433.507	REMOVE REGULATED WASTE MATERIAL (TRESTLE)	Lump Sum	1	$	$
11		2557.602	TRAIL GATE, TYPE SPECIAL	Each	4	$	$
12	10	2563.601	TRAFFIC CONTROL	Lump Sum	1	$	$
13		2564.550	DELINEATOR, TYPE SPECIAL	Each	4	$	$
14		2573.502	SILT FENCE, TYPE HI	Linear Foot	100	$	$
15		2573.533	SEDIMENT CONTROL LOG TYPE COMPOST	Linear Foot	50	$	$
16	5	2575.523	EROSION CONTROL BLANKET, CATEGORY 3	Square Yard	250	$	$
17	5	2575.502	SEED TYPE 36-311 (WOODLAND EDGE NE)	Pound	2	$	$
18	5	2575.501	SEEDING	Square Yard	250	$	$
TOTAL FOR BASE BID (transfer this amount to the Bid Form)							$

ALTERNATE 1 - GRADING NEAR REMOVED TRESTLE							
LINE NO.	NOTE NO.*	MN DOT SPEC NO.	ITEM DESCRIPTION	UNIT OF MEASURE	ESTIMATED QUANTITIES	UNIT PRICE	TOTAL
19	2	2101.502	CLEARING (4" OR GREATER)	Tree	4	$	$
20	3	2105.501	COMMON EXCAVATION	Cubic Yard	550	$	$
21	12	2118.501	SALVAGE AGGREGATE	Cubic Yard	45	$	$
22		2573.533	SEDIMENT CONTROL LOG TYPE COMPOST	Linear Foot	300	$	$
23	5	2575.523	EROSION CONTROL BLANKET, CATEGORY 3	Square Yard	600	$	$
24	5	2575.502	SEED TYPE 36-311 (WOODLAND EDGE NE)	Pound	2	$	$
25	5	2575.501	SEEDING	Square Yard	600	$	$
TOTAL FOR ALT 1 (transfer this amount to the Bid Form)							$

ALTERNATE 2 - CULVERT REPAIR							
LINE NO.	NOTE NO.*	MN DOT SPEC NO.	ITEM DESCRIPTION	UNIT OF MEASURE	ESTIMATED QUANTITIES	UNIT PRICE	TOTAL
26	1	2101.501	CLEARING (BRUSH)	Acre	0.1	$	$
27	2	2101.502	CLEARING (4" OR GREATER)	Tree	2	$	$
28	3	2105.501	COMMON EXCAVATION	Cubic Yard	25	$	$
29	6	2105.601	TEMPORARY STREAM DIVERSION SYSTEM	Lump Sum	1	$	$
30	7	2105.602	GRAVEL ENTRANCE RESTORATION	Lump Sum	1	$	$
31	4	2105.604	GEOTEXTILE FABRIC TYPE VII	Square Yard	25	$	$
32		2411.501	STRUCTURAL CONCRETE (3G52)	Cubic Yard	14	$	$
33		2433.602	GROUTED REINFORCEMENT BARS	Each	121	$	$
34	11	2501.603	CULVERT REPAIR - SPECIAL	Lump Sum	1	$	$
35	4	2511.501	RANDOM RIPRAP CLASS IV	Cubic Yard	24	$	$
36		2573.533	SEDIMENT CONTROL LOG TYPE COMPOST	Linear Foot	150	$	$
37	5	2575.523	EROSION CONTROL BLANKET, CATEGORY 3	Square Yard	200	$	$
38	5	2575.502	SEED TYPE 36-311 (WOODLAND EDGE NE)	Pound	4	$	$
39	5	2575.501	SEEDING	Square Yard	200	$	$
TOTAL FOR ALT 2 (transfer this amount to the Bid Form)							$

* Note numbers referenced can be found on plansheet 2.

NOTICE TO BIDDERS

Minnesota Statutes that require prompt payment to subcontractors:

471.425 Prompt payment of local government bills.

Subd. 1. Definitions. For the purposes of this section, the following terms have the meanings here given them.

(d) "Municipality" means any home rule charter or statutory city, county, town, school district, political subdivision or agency of local government. "Municipality" means the metropolitan council or any board or agency created under chapter 473.

Subd. 4a. Prompt payment to subcontractors.

Each contract of a municipality must require the prime contractor to pay any subcontractor within ten days of the prime contractor's receipt of payment from the municipality for undisputed services provided by the subcontractor. The contract must require the prime contractor to pay interest of 1-1/2 percent per month or any part of a month to the subcontractor on any undisputed amount not paid on time to the subcontractor. The minimum monthly interest penalty payment for an unpaid balance of $100 or more is $10. For an unpaid balance of less than $100, the prime contractor shall pay the actual penalty due to the subcontractor. A subcontractor who prevails in a civil action to collect interest penalties from a prime contractor must be awarded its costs and disbursements, including attorney's fees, incurred in bringing the action.

HIST: 1985 c 136 s 5; 1995 c 31 s 1

THIS FORM MUST BE RETURNED WITH YOUR BID

PRIME CONTRACTOR RESPONSE

RESPONSIBLE CONTRACTOR VERIFICATION AND CERTIFICATION OF COMPLIANCE

STATE PROJECT NUMBER: _____

This form includes changes by statutory references from the Laws of Minnesota 2015, chapter 64, sections 1-9. This form must be submitted with the response to this solicitation. A response received without this form, will be rejected.

Minn. Stat. § 16C.285, Subd. 7. **IMPLEMENTATION.** … any prime contractor or subcontractor or motor carrier that does not meet the minimum criteria in subdivision 3 or fails to verify that it meets those criteria is not a responsible contractor and is not eligible to be awarded a construction contract for the project or to perform work on the project…	
Minn. Stat. § 16C.285, Subd. 3. **RESPONSIBLE CONTRACTOR, MINIMUM CRITERIA**. "Responsible contractor" means a contractor that conforms to the responsibility requirements in the solicitation document for its portion of the work on the project and verifies that it meets the following minimum criteria:	
(1)	The Contractor: (i) is in compliance with workers' compensation and unemployment insurance requirements; (ii) is in compliance with Department of Revenue and Department of Employment and Economic Development registration requirements if it has employees; (iii) has a valid federal tax identification number or a valid Social Security number if an individual; and (iv) has filed a certificate of authority to transact business in Minnesota with the Secretary of State if a foreign corporation or cooperative.
(2)	The contractor or related entity is in compliance with and, during the three-year period before submitting the verification, has not violated section 177.24, 177.25, 177.41 to 177.44, 181.13, 181.14, or 181.722, and has not violated United States Code, title 29, sections 201 to 219, or United States Code, title 40, sections 3141 to 3148. For purposes of this clause, a violation occurs when a contractor or related entity: (i) repeatedly fails to pay statutorily required wages or penalties on one or more separate projects for a total underpayment of $25,000 or more within the three-year period, provided that a failure to pay is “repeated” only if it involves two or more separate and distinct occurrences of underpayment during the three-year period; (ii) has been issued an order to comply by the commissioner of Labor and Industry that has become final; (iii) has been issued at least two determination letters within the three-year period by the Department of Transportation finding an underpayment by the contractor or related entity to its own employees; (iv) has been found by the commissioner of Labor and Industry to have repeatedly or willfully violated any of the sections referenced in this clause pursuant to section 177.27; (v) has been issued a ruling or findings of underpayment by the administrator of the Wage and Hour Division of the United States Department of Labor that have become final or have been upheld by an administrative law judge or the Administrative Review Board; or (vi) has been found liable for underpayment of wages or penalties or misrepresenting a construction worker as an independent contractor in an action brought in a court having jurisdiction. Provided that, if the contractor or related entity contests a determination of underpayment by the Department of Transportation in a contested case proceeding, a violation does not occur until the contested case proceeding has concluded with a determination that the contractor or related entity underpaid wages or penalties;*

(3)	The contractor or related entity is in compliance with and, during the three-year period before submitting the verification, has not violated section 181.723 or chapter 326B. For purposes of this clause, a violation occurs when a contractor or related entity has been issued a final administrative or licensing order;*
(4)	The contractor or related entity has not, more than twice during the three-year period before submitting the verification, had a certificate of compliance under section 363A.36 revoked or suspended based on the provisions of section 363A.36, with the revocation or suspension becoming final because it was upheld by the Office of Administrative Hearings or was not appealed to the office;*
(5)	The contractor or related entity has not received a final determination assessing a monetary sanction from the Department of Administration or Transportation for failure to meet targeted group business, disadvantaged business enterprise, or veteran-owned business goals, due to a lack of good faith effort, more than once during the three-year period before submitting the verification;*
	* Any violations, suspensions, revocations, or sanctions, as defined in clauses (2) to (5), occurring prior to July 1, 2014, shall not be considered in determining whether a contractor or related entity meets the minimum criteria.
(6)	The contractor or related entity is not currently suspended or debarred by the federal government or the state of Minnesota or any of its departments, commissions, agencies, or political subdivisions that have authority to debar a contractor; and
(7)	All subcontractors and motor carriers that the contractor intends to use to perform project work have verified to the contractor through a signed statement under oath by an owner or officer that they meet the minimum criteria listed in clauses (1) to (6).

Minn. Stat. § 16C.285, Subd. 5. **SUBCONTRACTOR VERIFICATION**.

A prime contractor or subcontractor shall include in its verification of compliance under subdivision 4 a list of all of its first-tier subcontractors that it intends to retain for work on the project. Prior to execution of a construction contract, and as a condition precedent to the execution of a construction contract, the apparent successful prime contractor shall submit to the contracting authority a supplemental verification under oath confirming compliance with subdivision 3, clause (7). Each contractor or subcontractor shall obtain from all subcontractors with which it will have a direct contractual relationship a signed statement under oath by an owner or officer verifying that they meet all of the minimum criteria in subdivision 3 prior to execution of a construction contract with each subcontractor.

If a prime contractor or any subcontractor retains additional subcontractors on the project after submitting its verification of compliance, the prime contractor or subcontractor shall obtain verifications of compliance from each additional subcontractor with which it has a direct contractual relationship and shall submit a supplemental verification confirming compliance with subdivision 3, clause (7), within 14 days of retaining the additional subcontractors.

A prime contractor shall submit to the contracting authority upon request copies of the signed verifications of compliance from all subcontractors of any tier pursuant to subdivision 3, clause (7). A prime contractor and subcontractors shall not be responsible for the false statements of any subcontractor with which they do not have a direct contractual relationship. A prime contractor and subcontractors shall be responsible for false statements by their first-tier subcontractors with which they have a direct contractual relationship only if they accept the verification of compliance with actual knowledge that it contains a false statement.

Subd. 5a. **Motor carrier verification.** A prime contractor or subcontractor shall obtain annually from all motor carriers with which it will have a direct contractual relationship a signed statement under oath by an owner or officer verifying that they meet all of the minimum criteria in subdivision 3 prior to execution of a construction contract with each motor carrier. A prime contractor or subcontractor shall require each such motor carrier to provide it with immediate written notification in the event that the motor carrier no longer meets one or more of the minimum criteria in subdivision 3 after submitting its annual verification. A motor carrier shall be ineligible to perform work on a project covered by this section if it does not meet all the minimum criteria in subdivision 3. Upon request, a prime contractor or subcontractor shall submit to the contracting authority the signed verifications of compliance from all motor carriers providing for-hire transportation of materials, equipment, or supplies for a project.

Minn. Stat. § 16C.285, Subd. 4. **VERIFICATION OF COMPLIANCE.**
A contractor responding to a solicitation document of a contracting authority shall submit to the contracting authority a signed statement under oath by an owner or officer verifying compliance with each of the minimum criteria in subdivision 3, with the exception of clause (7), at the time that it responds to the solicitation document. A contracting authority may accept a signed statement under oath as sufficient to demonstrate that a contractor is a responsible contractor and shall not be held liable for awarding a contract in reasonable reliance on that statement. A prime contractor, subcontractor, or motor carrier that fails to verify compliance with any one of the required minimum criteria or makes a false statement under oath in a verification of compliance shall be ineligible to be awarded a construction contract on the project for which the verification was submitted. A false statement under oath verifying compliance with any of the minimum criteria may result in termination of a construction contract that has already been awarded to a prime contractor or subcontractor or motor carrier that submits a false statement. A contracting authority shall not be liable for declining to award a contract or terminating a contract based on a reasonable determination that the contractor failed to verify compliance with the minimum criteria or falsely stated that it meets the minimum criteria. A verification of compliance need not be notarized. An electronic verification of compliance made and submitted as part of an electronic bid shall be an acceptable verification of compliance under this section provided that it contains an electronic signature as defined in section 325L.02, paragraph (h).

CERTIFICATION	
By signing this document I certify that I am an owner or officer of the company, and I swear under oath that: **1) My company meets each of the Minimum Criteria to be a responsible contractor as defined herein and is in compliance with Minn. Stat. § 16C.285, and** **2) if my company is awarded a contract, I will submit Attachment A-1 prior to contract execution, and** **3) if my company is awarded a contract, I will also submit Attachment A-2 as required.**	
Authorized Signature of Owner or Officer:	**Printed Name:**
Title:	**Date:**
Company Name:	

NOTE: Minn. Stat. § 16C.285, Subd. 2, (c) If only one prime contractor responds to a solicitation document, a contracting authority may award a construction contract to the responding prime contractor even if the minimum criteria in subdivision 3 are not met.

ATTACHMENT A-1

FIRST-TIER SUBCONTRACTORS LIST

SUBMIT PRIOR TO EXECUTION OF A CONSTRUCTION CONTRACT

STATE PROJECT NUMBER: _____

Minn. Stat. § 16C.285, Subd. 5. A prime contractor or subcontractor shall include in its verification of compliance under subdivision 4 a list of all of its first-tier subcontractors that it intends to retain for work on the project. Prior to execution of a construction contract, and as a condition precedent to the execution of a construction contract, the apparent successful prime contractor shall submit to the contracting authority a supplemental verification under oath confirming compliance with subdivision 3, clause (7). Each contractor or subcontractor shall obtain from all subcontractors with which it will have a direct contractual relationship a signed statement under oath by an owner or officer verifying that they meet all of the minimum criteria in subdivision 3 prior to execution of a construction contract with each subcontractor.

FIRST TIER SUBCONTRACTOR NAMES* (Legal name of company as registered with the Secretary of State)	**Name of city where company home office is located**

*Attach additional sheets as needed for submission of all first-tier subcontractors.

SUPPLEMENTAL CERTIFICATION FOR ATTACHMENT A-1	
By signing this document I certify that I am an owner or officer of the company, and I swear under oath that: **All first-tier subcontractors listed on attachment A-1 have verified through a signed statement under oath by an owner or officer that they meet the minimum criteria to be a responsible contractor as defined in Minn. Stat. § 16C.285.**	
Authorized Signature of Owner or Officer:	**Printed Name:**
Title:	**Date:**
Company Name:	

ATTACHMENT A-2

ADDITIONAL SUBCONTRACTORS LIST

PRIME CONTRACTOR TO SUBMIT AS SUBCONTRACTORS ARE ADDED TO THE PROJECT

STATE PROJECT NUMBER: _____

This form must be submitted to the Project Manager or individual as identified in the solicitation document.

Minn. Stat. § 16C.285, Subd. 5. … If a prime contractor or any subcontractor retains additional subcontractors on the project after submitting its verification of compliance, the prime contractor or subcontractor shall obtain verifications of compliance from each additional subcontractor with which it has a direct contractual relationship and shall submit a supplemental verification confirming compliance with subdivision 3, clause (7), within 14 days of retaining the additional subcontractors. …

ADDITIONAL SUBCONTRACTOR NAMES* (Legal name of company as registered with the Secretary of State)	**Name of city where company home office is located**

*Attach additional sheets as needed for submission of all additional subcontractors.

SUPPLEMENTAL CERTIFICATION FOR ATTACHMENT A-2	
By signing this document I certify that I am an owner or officer of the company, and I swear under oath that: **All additional subcontractors listed on Attachment A-2 have verified through a signed statement under oath by an owner or officer that they meet the minimum criteria to be a responsible contractor as defined in Minn. Stat. § 16C.285.**	
Authorized Signature of Owner or Officer:	**Printed Name:**
Title:	**Date:**
Company Name:	

AFFIDAVIT AND INFORMATION REQUIRED OF BIDDERS

Affidavit of Non-Collusion:

I hereby swear (or affirm) under penalty of perjury:

1) That I am the bidder (if the bidder is an individual), a partner in the bidder (if the bidder is a partnership), or an officer or employee of the bidding corporation having authority to sign on its behalf (if the bidder is a corporation);

2) That the attached bid or bids have been arrived at by the bidder independently and have been submitted without collusion with and without agreement, understanding, or planned common course of action with any other vendor of materials, supplies, equipment or services described in the invitation to bid, designed to limit independent bidding or competition;

3) That the contents of the bid or bids have not been communicated by the bidder or its employees or agents to any person not an employee or agent of the bidder or its surety on any bond furnished with the bid or bids and will not be communicated to any such person prior to the official opening of the bid or bids;

4) That a family relationship between a City of Duluth employee and bidder/proposer are in non-collusion; and

5) That I have fully informed myself regarding the accuracy of the statements made in this affidavit.

Signed: _____

Firm Name: _____

Subscribed and sworn to me before this _____ day of _____, _____

NOTARY PUBLIC _____

My commission expires: _____

Bidder's Federal Identification Number _____

EQUAL EMPLOYMENT OPPORTUNITY EEO AFFIRMATIVE ACTION
POLICY STATEMENT & COMPLIANCE CERTIFICATE

TO: City of Duluth, MN PROJECT NUMBER & DESCRIPTION _____

_____

FROM: _____

_____
(Vendor's name, address, telephone number)

A) Employment: It is the policy of the above named FIRM to afford equal opportunity for employment to all individuals regardless of race, color, creed, religion, national origin, ancestry, age, sex, marital status, status with respect to public assistance and/or disability. The FIRM will take affirmative action to ensure that we will: (1) recruit, hire, and promote all job classifications without regard to race, color, creed, religion, national origin, ancestry, age, sex, marital status, status with respect to public assistance, and/or disability, except where sex is a bona fide occupational qualification; (2) base decisions on employment so as to further the principle of equal employment opportunity; (3) ensure that promotion decisions are in accord with the principles of equal employment opportunity by imposing only valid requirements for promotional opportunities; (4) ensure that all personnel actions such as compensation, benefits, transfers, layoffs, return from layoff, FIRM sponsored training, education tuition assistance, social and recreational programs will be administered without regard to race, color, creed, religion, national origin, ancestry, age, sex, marital status, status with respect to public assistance, and/or disability. The FIRM also intends full compliance with Veteran affirmative action requirements. Additionally, minority and female employees shall be encouraged to participate in all FIRM activities and refer applicants.

I have designated (name) _____to direct the establishment of and to monitor the implementation of personnel procedures to guide the FIRM's affirmative action program. Where PROJECTS exceed $500,000, this official shall also serve as the liaison officer that administers the FIRM's "Minority Business Enterprise Program." This official is charged with designing and implementing audit and reporting systems that will keep management informed on a monthly basis of the status of the equal opportunity area.

Supervisors have been made to understand that their work performance is being evaluated on the basis of their equal opportunity efforts and results, as well as other criteria. It shall be the responsibility of the FIRM and its supervisors to take actions to prevent harassment of employees placed through affirmative action efforts.

B) Reports: Unless exempted by law and regulation, the FIRM shall make available and file those reports related to equal opportunity as may be required by the City of Duluth and State and Federal compliance agencies. Requirements and Reports are defined in 41CFR60 "Compliance Responsibility for Equal Opportunity" published by the U. S.Department of Labor which is incorporated herein by reference. Additional requirements are defined in various State and Federal Civil Rights Legislation and Rules promulgated thereunder.

C) Nonsegregated Facilities: The FIRM certifies that it does not maintain or provide for its employees any segregated facilities at any of its establishments and that it does not permit its employees to perform their services at any location, under its control, where segregated facilities are maintained. The FIRM certifies that it will not maintain or provide for its employees any segregated facilities at any of its establishments and that it will not permit its employees to perform their services at any location, under its control, where segregated facilities are maintained. The FIRM agrees that a breach of this certification is a violation of the Equal Opportunity Clause in this certificate. As used in this Certification, the term "segregated

facilities" means any waiting rooms, work area, rest rooms and wash rooms, restaurants and other eating areas, time clocks, locker rooms and other storage or dressing areas, parking lots, drinking fountains, recreation for entertainment area, transportation, and housing facilities provided for employees which are segregated by explicit directive or are, in fact, segregated on the basis of race, color, religion, or national origin, because of habit, local custom, or otherwise.

D) Affirmative Action Compliance Program: Unless exempted by regulation and law, the FIRM–if the FIRM has 50 or more employees and if the value of current contracts with the City of Duluth exceeds $50,000–shall prepare and maintain a written affirmative action compliance program that meets the requirement as set forth in 41CFR60.

E) Non-Compliance: The FIRM certifies that it is not currently in receipt of any outstanding letters of deficiencies, show cause, probable cause, or other such notification of non-compliance with EEO Laws and Regulations.

F) Employment Goals - "Construction" Projects: It shall be the goal of the FIRM if the PROJECT is of a construction nature that in all on-site employment generated that no less than 3% of the on-site workforce will be minority employees and that no less than 7% of the on-site workforce will be female employees. Further, it is the goal of the FIRM if the PROJECT is of a construction nature that in all on-site employment generated that no less than 3% of the work hours generated shall be worked by minority employees and that no less than 7% of the work hours generated shall be worked by female employees.

G) Subcontractors: The FIRM will for all its PROJECT subcontractors regardless of tier (unless exempted by law and regulation) that received in excess of $2,500 require that: (1) the subcontractor shall execute an "EEO Statement and Certification" similar in nature to this "Statement and Certification", (2) said documentation to be maintained on file with the FIRM or subcontractor as may be appropriate.

Executed this _____ day of _____, 20__ by:

_____

Printed name and title

_____

Signature

NOTE: In addition to the various remedies prescribed for violation of Equal Opportunity Laws, the penalty for false statements is prescribed in 18 U.S.C. 1001.

CONTRACTOR
&
CITY OF DULUTH

THIS AGREEMENT, effective as of the date of attestation by the City Clerk, is made by and between the **CITY OF DULUTH**, a municipal corporation, hereinafter referred to as the "CITY," party of the first part, and **Contractor, address,** hereinafter referred to as the "Contractor," party of the second part;

WITNESSETH: That the Contractor and the City agree as follows:

1. The following shall be deemed to be part of this contract:
   a. The annexed resolution and legal advertisement of the City Council.
   b. The bid request and specifications, as modified by irreconcilable language in this written contract.
   c. The bid by Contractor, as modified by irreconcilable language in this written contract.
   d. The performance bond and payment bond certification.
   e. All provisions of law applicable to a contract of this nature.

2. The Contractor agrees to furnish and deliver to the Department all labor, supervision, material, equipment, supplies, insurance, performance bond, payment bond and everything else necessary for general construction of Project at location, all in strict accordance with plans and specifications prepared by design co. or city architect, your bid of $ and resolution no. passed on date. Contractor shall not commence performance of any work under this contract until Contractor receives authorization from the City's Purchasing Agent in writing and dated.

3. The City agrees to pay progress payments and make final payments to the Contractor as stated in the contract specifications. The total amount payable under this contract shall not exceed **dollar amount spelled out ($)** unless the contract is modified by formal amendment or change order. Payments under this Agreement shall be made from the following funding and RQ no. Due to the dollar amount of this contract, a Project Labor Agreement is or is not included as part of this contract (City Code Section 2-29).

4. The Contractor shall furnish and maintain in full force and effect until this contract is completely performed by the Contractor, a performance bond and payment bond if and when required by law, or if and when required by the City.

5. Inasmuch as this contract concerns work, materials and equipment needed for the public benefit, the provisions of this contract relating to the time of performance and completion of work and delivery of materials or equipment are of the essence of this contract.

6. The Contractor will defend, indemnify and save the City harmless from all costs, charges, damages, and loss of any kind that may grow out of the matters covered by this contract.

DRAFT

Said obligation does not include indemnification of the City for claims of liability arising out of the sole negligent or intentional acts or omissions of City but shall include but not be limited to the obligation to defend, indemnify and save harmless the City in all cases where claims of liability against the City arise out of acts or omissions of City which are derivative of the negligence or intentional acts or omissions of Contractor such as, and including but not limited to, the failure to supervise, the failure to warn, the failure to prevent such act or omission by Contractor and any other such source of liability. In addition Contractor will comply with all local, state and federal laws, rules and regulations applicable to this contract and to the work to be done and things to be supplied hereunder.

7. Insurance

a. Contractor shall provide the following minimum amounts of insurance from insurance companies authorized to do business in the state of Minnesota, which insurance shall indemnify Contractor and City from all liability described in Paragraph 6 above, subject to provisions below.

(1) Workers' compensation insurance in accordance with the laws of the State of Minnesota.

(2) Public Liability and Automobile Liability Insurance with limits not less than **$1,500,000** Single Limit, and twice the limits provided when a claim arises out of the release or threatened release of a hazardous substance; shall be in a company approved by the city of Duluth; and shall provide for the following: Liability for Premises, Operations, Completed Operations, Independent Contractors, and Contractual Liability.

(3) City of Duluth shall be named as **Additional Insured** under the Public Liability, Excess/Umbrella Liability* and Automobile Liability, or as an alternate, Contractor may provide Owners-Contractors Protective policy, naming itself and the City of Duluth. Contractor shall also provide evidence of Statutory Minnesota Workers Compensation Insurance. Contractor to provide Certificate of Insurance evidencing such coverage with 30-days' notice of cancellation, non-renewal or material change provisions included. The City of Duluth does not represent or guarantee that these types or limits of coverage are adequate to protect the Contractor's interests and liabilities.

**An umbrella policy with a "following form" provision is acceptable if written verification is provided that the underlying policy names the City of Duluth as an additional insured.*

(4) If a certificate of insurance is provided, the form of the certificate shall contain an unconditional requirement that the insurer notify the City without fail not less than 30 days' prior to any cancellation, non-renewal or modification of the policy or coverages evidenced by said certificate and shall further provide that failure to give such notice to City will render any such change or changes in said policy or coverages ineffective as against the City.

(5) The use of an "ACORD" form as a certificate of insurance shall be accompanied by two forms – 1) ISO Additional Insured Endorsement (CG-2010 pre-2004) and 2) Notice of Cancellation Endorsement (IL 7002) or equivalent, as approved by the Duluth City Attorney's Office.

b. The insurance required herein shall be maintained in full force and effect during the life of this Agreement and shall protect Contractor, its employees, agents and representatives from claims and damages including but not limited to personal injury and death and any act or failure to act by Contractor, its employees, agents and representatives in the negligent performance of work covered by this Agreement.

c. Certificates showing that Contractor is carrying the above described insurance in the specified amounts shall be furnished to the City prior to the execution of this Contract and a certificate showing continued maintenance of such insurance shall be on file with the City during the term of this Contract.

d. Contractor shall be required to provide insurance meeting the requirements of this Paragraph 7 unless Contractor successfully demonstrates to the satisfaction of the City Attorney, in the exercise of his or her discretion, that such insurance is not reasonably available in the market. If Contractor demonstrates to the satisfaction of the City Attorney that such insurance is not reasonably available, the City Attorney may approve an alternative form of insurance which is reasonably available in the market which he or she deems to provide the highest level of insurance protection to the City which is reasonably available.

8. No claim whatsoever shall be made by the Contractor against any officer, agent or employee of the City for, or on account of, anything done, or omitted to be done, in connection with this contract. If this contract is not made in conformity with mandatory provisions of any statute or of the ordinances and charter of the City of Duluth, the Contractor agrees to raise no defense and make no claim against the City on the basis of ratification, laches, estoppel, or implied contract.

9. The Contractor shall not assign, transfer, convey or otherwise dispose of this contract, or his right to execute it, or his right, title or interest in or to it, or any part thereof, without the consent of the City, evidenced by a resolution duly adopted by the City Council. The prohibition contained in this paragraph shall not be deemed to prevent the contractor from subcontracting. Contractor shall remain primarily responsible for all work performed by any subcontractor.

10. The Contractor agrees that in the hiring of common or skilled labor for the performance of any work under this contract, Contractor will not discriminate by reason of race, creed or color, religion, national origin, sex, marital status, status with regard to public assistance, disability or age.

11. The Contractor agrees that Contractor shall not in any manner discriminate against or intimidate or prevent the employment of any person or persons, or on being hired, prevent or conspire to prevent any person or persons from the performance or work under this contract on account of race, creed or color, religion, national origin, sex, marital status, status with regard to public assistance, disability or age.

12. The contractor agrees that, as provided in Minnesota Statutes 16C.05, Subd. 5, contractor's books, records, documents, and accounting procedures and practices are subject to examination by the City or the state auditor for six years from the date of final payment under this contract.

13. This contract may be cancelled or terminated by the City and all moneys due or to become due hereunder may be forfeited for any failure to perform any terms or conditions of this contract including but not limited to any violation of the terms or conditions of Section 10 or 11 of this contract.

14. Any waiver by any party of any provision of this contract shall not imply a subsequent waiver of that or any other provision.

15. This contract is made in the state of Minnesota and shall be construed and interpreted in accordance with the laws of the State of Minnesota. The appropriate venue and jurisdiction for any litigation hereunder shall be in a court located in St. Louis, County, Minnesota, and the parties to this Agreement waive objection to the jurisdiction of this court, whether based on convenience or otherwise.

16. This Agreement constitutes the entire agreement between the City and the Contractor on the subject matter hereof. It may not be changed, modified, discharged or extended except by written instrument duly executed on behalf of the City and the Contractor. The Contractor agrees that no representations or warranties made by the City shall be binding upon the City unless expressed in writing herein.

17. This Agreement shall not be in force and effect, or in any way binding upon the City until the same shall have been approved by the Department Head, signed by the Mayor, attested by the Clerk, and countersigned by the City Auditor.

18. The Contractor unconditionally guarantees to perform all work pursuant to this contract in a good and workmanlike manner, in strict compliance with the specifications and instructions hereto attached, and to the satisfaction of the City of Duluth.

19. This Agreement may be executed in counterparts, each of which shall be deemed to be original and all of which together shall constitute the binding and enforceable agreement of the parties hereto. This Agreement may be executed and delivered by a party by facsimile or PDF transmission, which transmission copy shall be considered an original and shall be binding and enforceable against such party.

Countersigned:

_____
City Auditor
Approved this_____day of _____

_____
Department Director
Approved this_____day of _____

_____
Purchasing Agent
Approved this_____day of _____

_____
Assistant City Attorney
Approved this_____day of _____

CITY OF DULUTH-Client

By

_____
Mayor

Attest:

_____
City Clerk
Attested this_____day of _____

CONTRACTOR/COMPANY
Contractor

By

_____
Company Representative

Its

_____
Title of Representative
Approved this_____day of _____

CITY OF DULUTH - PART II -

SUPPLEMENTARY GENERAL CONDITIONS FOR FEDERALLY, STATE OF MINNESOTA, AND/OR CITY ASSISTED ACTIVITIES

(revised 4/15/11)

The following conditions take precedence over any conflicting conditions in this Contract.

Section	Title
1	Restrictions on Disbursements, Subcontractors Federal Agency Requirements, Separability, Property
2	Miscellaneous Provisions
3	Definitions
4	Environmental Provisions
5	Contract Compliance
6	Records, Reports and Information, Audits and Inspections
7	Conflict of Interest and Lobbying
8	Labor Standards - Physical Improvement Projects
9	Minnesota Department of Transportation Specification 1960 Partial Payments
10	Housing and Urban Development (HUD) Section 4010
11	Equal Opportunity and Affirmative Action
12	Employment Opportunities - "HUD Section 3"
13	Federal Requirements for Minority/Women Business Enterprises Contract Guidance - MPFA
14	Forms

E-Mail Addresses

For ease in communication, the e-mail address of the person(s) responsible for preparing certified payroll reports (CPRs) is required from the prime contractor and all subcontractors (regardless of tier). This information will be provided to the project engineer prior to the pre-construction meeting OR with materials required in the Letter of Intent.

Section I

Restrictions on Disbursements

No money under this Contract shall be disbursed by the City to any Contractor except pursuant to a written contract which incorporates the applicable PART II, Supplementary General Conditions for Federally, State of Minnesota, and/or City Assisted Activities, and unless the Contractor is in compliance with the Federal Agency requirements with regard to accounting and fiscal matters to the extent they are applicable.

Subcontractors

(A) The Contractor shall include in any subcontract the clauses set forth in the PART II, Supplementary General Conditions for Federally, State of Minnesota and/or City Assisted Activities in their entirety and also a clause requiring the subcontractors to include these clauses in any lower tier subcontracts which they may enter into, together with a clause requiring this insertion in any further subcontracts that may in turn be made.

(B) The Contractor shall not subcontract any part of the work covered by this Contract or permit subcontracted work to be further subcontracted without the City's prior written approval of the subcontractors. The City will not approve any subcontractor for work covered by this Contract who is at the time ineligible under the provisions of any applicable regulations issued by a Federal Agency or the Secretary of Labor, United States Department of Labor, to receive an award of such subcontract.

Federal Agency Requirements

Unearned payments under this Contract may be suspended or terminated upon refusal to accept any additional conditions that may be imposed by the Federal Agency at any time; or if the grant, if applicable, to the City under which this Contract is made is suspended or terminated.

Separability

If any provisions of this Contract is held invalid, the remainder of this Contract shall not be affected thereby if such remainder would then continue to conform to the terms and requirements of applicable law.

Property

Acquisition, use, and disposal of all property, materials and goods acquired as a result of activities made possible by this Contract shall be accomplished in accordance with the applicable provisions of Federal Management Circular (FMC)-74-7, as amended.

Section 2

Miscellaneous Provisions

(A) **Copyrights.** In the event this Contract results in a book or other copyrightable material, the author is free to copyright the work, but Federal Agency and the City reserve a royalty-free, nonexclusive, and irrevocable license to reproduce, publish or otherwise use, all copyrighted material and all material which can be copyrighted.

(B) **Patents.** Any discovery or invention arising out of or developed in the course of work aided by this Contract shall be promptly and fully reported to the Federal Agency and the City for determination by the Federal Agency as to whether patent protection on such invention or discovery shall be sought and how the rights in the invention or discovery, including rights under any patent issued thereon, shall be disposed of and administered in order to protect the public interests.

(C) **Political Activity Prohibited.** None of the funds, materials, property or services provided directly or indirectly under this Contract shall be used in the performance of this Contract on any partisan political activity, or to further the election or defeat of any candidate for public office.

(D) **Lobbying Prohibited.** None of the funds under this Contract shall be used for publicity or propaganda purposes designed to support or defeat legislation pending before the Congress or the City.

(E) **Prohibition of and Elimination of Lead-Based Paint Hazard.** Notwithstanding any other provision, the Agency and Contractor agree to comply with the regulation issued by the Secretary of Housing and Urban Development set forth in 37 F. R. 22732-3 and all applicable rules and orders issued thereunder which prohibit the use of lead-based paint in residential structures undergoing Federally assisted construction or rehabilitation and require the elimination of lead-based paint hazards. Every contract or subcontract, including paint, pursuant to which such Federally assisted construction or rehabilitation is performed shall include appropriate provisions prohibiting the use of lead-based paint.

(F) **Architectural Barriers Act.** The design for and construction of any facility funded in whole or in part by this Contract shall be in conformance with the American Standard Specification for Making Buildings and Facilities Accessible and Usable by the Physically Handicapped, Number A-117.1-1971, as modified.

(G) **Relocation and Acquisition.** Any relocation or acquisition resulting from activities funded in whole or in part by this Contract shall be in conformance with the provisions of the Uniform Relocation Assistance and Real Property Acquisition Policies Act of 1970 (40 U.S.C. 4601) and the implementing regulations 24CFR Part 42.

(H) **Prohibition Against Payments of Bonus or Commission.** The assistance provided under this Contract shall not be used in the payment of any bonus or commission for the purpose of obtaining Federal Agency approval for such assistance, or Federal Agency approval of applications for additional assistance, or any other approval or concurrence of a Federal Agency required under this Contract, Federal Law or Federal Regulations thereto; provided, however, that reasonable fees or bonafide technical, consultant, managerial or other such services, other than actual solicitation, are not hereby prohibited if otherwise eligible as project costs.

(I) **Hatch Act.** Where applicable, the Contractor will comply with the provisions of the Hatch Act which limits the political activity of the Contractor's employees.

Section 3
Definitions

(A) City means the City of Duluth, Contracting Officer, or other persons authorized to act on behalf of the City of Duluth.

(B) Contracting Officer is the delegated representative of the City who has the responsibility for administering the Project.

(C) Contractor means an entity, whether public or private, which furnishes (other than standard commercial supplies, office space or printing services) to the City, products, services or supplies as described in this project Contract.

(D) Federal Agency means the United States, the District of Columbia, and any executive department, independent establishment, administrative agency, or instrumentality of the United States or of the District of Columbia, including any corporation, all or substantially all of the stock of which is beneficially owned by the United States, by the District of Columbia, or by any of the foregoing departments, establishments, agencies, and instrumentalities. The term Federal Agency shall also include the person or persons authorized to act on behalf of said Federal Agency.

(E) Project means the activities to be undertaken by the Contractor as described in this Contract, which from time to time may be amended by mutual consent of the City and Contractor.

(F) Subcontractor means an entity, regardless of tier, which has entered into an agreement with the Contractor or another Subcontractor, to undertake certain Project activities as described in that agreement.

(G) The term labor standards, as used in the Contract, means the requirements of the Davis-Bacon Act, the Contract Work Hours and Safety Standards Act (other than those relating to safety and health), the Copeland Act, and the prevailing wage provisions of the other statutes listed in 20 CFR 5.1.

(H) Work means all labor necessary to produce the construction required by the Contract Documents, all materials and equipment incorporated or to be incorporated in such construction, products, services, or supplies required by the Contract Documents, or any other requirements set forth in the Contract.

(I) Additional Definitions, that are applicable to the Labor Standards provisions - Section 8 - of this Contract can be found in 29CFR5.2 as published by the U.S. Department of Labor and said definitions are hereby incorporated by reference into the provisions of this Contract.

Section 4
Environmental Provisions

(A) The Contractor agrees to follow the regulations, requirements, policies, goals and procedures set forth by the Council on Environmental Quality (CEQ) under provisions of the National Environmental Policy Act (NEPA) (Pub. L 91-190, 42 U.S.C. 4321 et seq.), Executive Order 11514, and 40 CFR Part 1500.

(B) **Historic Properties.** The Contractor agrees to follow the regulations, requirements, policies, goals, and procedures set forth under provisions of the National Historic Preservation Act of 1966 (Pub. L. 89-665); Preservation of Historic and Archeological Data Act of 1974 (Pub. L. 93-291); Executive Order 11593; 36 CFR , Part 800 and applicable State legislation or regulations.

(C) **Coastal Zones and Wetlands.** The Contractor agrees to follow the regulations, requirements, policies, goals and procedures set forth under provisions of the Coastal Zone Management Act of 1972 (Pub. L. 92-583) and applicable State legislation or regulations.

(D) **Noise.** The Contractor agrees to comply with provisions set forth in the U.S. Department of Housing and Urban Development Handbook 1390.2, Noise Abatement and Control, Department Policy, Responsibility and Standards, 1971.

(E) **Flood Plain.** The Contractor agrees to comply with the provisions set forth in the Flood Disaster Protection Act of 1973 (Pub. L. 93-234) and implementing regulations; Title 24, Chapter X, Subchapter B, National Flood Insurance Program, Executive Order 11296, and Executive Order 11988 relating to the evaluation of flood hazards.

(F) **Air Quality.** The Contractor agrees to comply with provisions set forth in the Clean Air Act (Pub. L. 90-148) and Clean Air Act Amendments of 1970 (Pub. L. 91-604); and applicable U.S. Environmental Protection Agency implementing regulations.

(G) **Water Quality.** The Contractor agrees to comply with the provisions set forth in the Federal Water Pollution Control Act (Pub. L. 92-500) and applicable U.S. Environmental Protection Agency implementing regulations, and Executive Order 11288 relating to the prevention, control, and abatement of water pollution.

(H) **Wildlife.** The Contractor agrees to comply with the provisions of the Fish and Wildlife Coordination Act (Pub. L. 85-264).

Section 5
Contract Compliance

(A) In the event of the Contractor's noncompliance with the provisions of this Contract or with any of the said regulations, the City may withhold payment(s) until evidence of compliance by the Contractor has been demonstrated, or the Contract may be canceled, terminated or suspended in whole or in part and the Contractor may be declared ineligible for further City contracts.

(B) In the event the Contract is terminated or canceled as a result of noncompliance with any of the provisions of this Contract, the City may subject to bids the remainder of the Project for which this Contract was made. The City shall have the right upon termination or suspension to withhold all further payments under this

Contract to the Contractor. Upon the award of a new contract for the remainder of the Project, the City shall pay to the Contractor an amount no more than the balance remaining due to the Contractor less the sum of the costs incurred by the City which are necessary in preparing the new bid specifications. In the event the amount paid the Contractor prior to the date of termination or cancellation exceeds the full amount of this Contract less the cost of the new contract and the additional costs mentioned above, the Contractor agrees to reimburse the City for such excess amount within ninety days after the new contract is awarded by the above procedures.

(C) Provisions contained in subparagraph (A) and (B) above shall not be interpreted as precluding any authorized Federal, State, or County governmental unit from exercising their legal administrative or other responsibilities in respect to the enforcement by said governmental units of laws or regulations concerning activities of the Contractor.

Section 6

Records

(A) **Establishment and Maintenance of Records.** Records shall be maintained in accordance with requirements prescribed by the Federal Agency or the City with respect to all matters covered by this Contract. Except as otherwise authorized by the Federal Agency, such records shall be maintained for a period of three years after receipt of final payment under this Contract.

(B) **Documentation of Costs.** All costs shall be supported by properly executed payrolls, time records, invoices, contracts, or vouchers, or other official documentation evidencing in proper detail the nature and propriety of the charges. All checks, payrolls, invoices, contracts, vouchers, orders, or other accounting documents pertaining in whole or in part to this Contract shall be clearly identified and readily accessible.

Reports and Information

At such times and in such forms as the Federal Agency or the City may require, there shall be furnished to the Federal Agency or the City such statements, records, data and information as the Federal Agency or the City may request pertaining to matters covered by this Contract.

Audits and Inspection

At any time during normal business hours and as often as the City, the Federal Agency and/or the Comptroller General of the United States may deem necessary, there shall be made available to the City, the Federal Agency and/or representatives of the Comptroller General for examination of all its records with respect to all matters covered by this Contract and will permit the City, the Federal Agency and/or representative of the Comptroller General to audit, examine and make excerpts or transcripts from such records, and to make audits of all contracts, invoices, materials, payrolls, records of personnel, conditions of employment, and other data relating to all matters covered by this Contract.

Section 7

Conflict of Interest and Lobbying

(A) **Interest of Members, Officers, or Employees of the City, Members of Local Governing Body, or Other Public Officials.** No member, officer, or employee of the City, or its designees or agents, or member of the governing body of the City, during his/her tenure of for one year thereafter, shall have any interest, direct or indirect in any contract or subcontract, or the proceeds thereof, for work to be performed in connection with the Project assisted under this Contract. Any contract in which any of the above indicated individuals becomes directly or indirectly, interested, personally or as a member of a firm, or as an officer, director, or stockholder of a corporation, shall be and become absolutely void; and any money which shall have been paid on such contract by the City may be recovered back from any or all persons interested therein, by a joint action or several actions.

(B) The Contractor agrees that he will incorporate into every contract required to be in writing the following provisions: **Interest of Contractors and Employees** - The Contractor covenants that he presently has no interest and shall not acquire any interest, direct or indirect, in the Project which would conflict in any manner or degree with the performance of this Contract, and no person having any conflicting interest shall be employed. Any interest on the part of the Contractor or his employees must be disclosed to the Federal Agency and the City. Provided, however, that this paragraph shall be interpreted in such a manner so as not to unreasonably impede any statutory requirements that opportunity be provided for employment of and participation by certain residents of a designated geographical are, if applicable.

(C) **Interest of Member or of Delegate to Congress.** No member of or Delegate to Congress, or Resident Commissioner, shall be admitted to any share or part of this Contract or to any benefit that may arise therefrom, but this provision shall not be construed to extend to this Contract if made with a corporation for its general benefit.

(D) The Contractor by signing this document certifies, to the best of his or her knowledge and belief, that:

(1) No Federal appropriated funds have been paid or will be paid, by or on behalf of the Contractor, to any person for influencing or attempting to influence an officer or employee of any agency, a Member of Congress, an officer or employee of Congress, or an employee of a Member of Congress in connection with the awarding of any Federal contract, the making of any Federal grant, the making of any Federal loan, the entering into of any cooperative agreement, and the extension, continuation, renewal, amendment, or modification of any Federal contract, grant, loan, or cooperative agreement.

(2) If any funds other than Federal appropriated funds have been paid or will be paid to any person for influencing or attempting to influence an officer or employee of any agency, a member of Congress, an officer or employee of Congress, or an employee of a Member of Congress in connection with this Federal contract, grant, loan, or cooperative agreement, the Contractor shall complete and submit Standard Form -LLL, "Disclosure Form to Report Lobbying," in accordance with its instructions.

The above certification is a material representation of fact upon which reliance was placed when this transaction was made or entered into. Submission of this certification is a prerequisite for making or entering into this transaction imposed by section 1332, title 31, U.S. Code. Any person who fails to file the required certification shall be subject to a civil penalty of not less than $10,000 and not more than $100,000 for each such failure.

(E) The parties to this Contract certify and agree that they are under no contractual or other disability which would prevent them from complying with the terms of this Contract.

Section 8

Labor Standards - Physical Improvement Projects

Where applicable, there shall be included in all construction, rehabilitation, alteration or repair contracts with private entities made possible by or resulting from this Contract, the following Labor Standards provisions;

(A) **General Requirements.**

(1) **Subcontracts.** The Contractor shall include in any subcontract the clauses set forth in Section 8, **Labor Standards**, in their entirety and also a clause requiring the subcontractors to include these clauses in any Tower tier subcontract which they may enter into, together with a clause requiring this insertion in any further subcontracts that may in turn be made.

(2) The transporting of materials and supplies to or from the site of the Project or Program to which this Contract pertains by the Employees of the Contractor or of any subcontractor, and the manufacturing or furnishing of materials, articles, supplies, or equipment on the site of the Project or Program to which this Contract pertains by persons employed by the Contractor or by any subcontractor, shall for the purpose of this Contract, and without limiting the generality of the foregoing provisions of this Contract, be deemed to be work to which these **Labor Standards** provisions are applicable.

(3) No person under the age of eighteen years shall be employed on work covered by this Contract.

(4) In connection with the performance of work under this Contract, the Contractor agrees not to employ any person undergoing sentence of imprisonment except as provided by Public Law 89-176, September 10, 1955 (18 U.S.C. 4082 (c) (2)) and Executive Order 11755, December 29, 1973.

(5) The Contractor will permit authorized representatives of the Federal Agency and the City to interview employees during working hours on the job.

(6) No employee to whom the wage, salary, or other **Labor Standards** provisions of this Contract are applicable shall be discharged or in any other manner discriminated against by the Contractor or any subcontractor because such employee has filed any complaint or instituted or caused to be instituted any proceeding or has testified or is about to testify in any proceeding under or relating to the Labor Standards applicable under this Contract to his employer.

(B) **Safety Standards.** No Contractor or subcontractor contracting for any part of a construction contract shall require any laborer or mechanic, including apprentices and trainees, employed in the performance of the Contract to work in surroundings or under working conditions which are unsanitary, hazardous or dangerous to his health or safety, as determined under construction safety and health standards promulgated by the Secretary of Labor. The Contractor or subcontractor comply with all the rules, regulations, and relevant orders, promulgated by the Secretary of Labor pursuant to Public Law 91-54.

(C) **Davis-Bacon Act - 29 CFR 5.5**

web site: http://ecfr.gpoaccess.gov/cgi/t/text/text-idx?c=ecfr&tpl=/ecfrbrowse/Title29/29cfr5_main_02.tpl

Refer to Section 10, Page 10 Housing and Urban Development (HUD) form-4010 (06/2009) Ref Handbook 1344.1

City of Duluth "Mini Davis-Bacon"

(D) **City of Duluth - Minimum Wage Ordinance 8940, as Amended.**

(1) On a project (as defined below) funded in whole or in part by federal and/or state funds and/or city of Duluth funds, these local provisions shall prevail in those instances where the requirements of the local provisions are equal to or greater than similar minimum labor standards provisions as set forth in applicable federal and/or state laws and regulations.

(2) In all contracts in excess of $2,000 for projects (as defined below), the Contractor's particular attention is called to Ordinance 8940, effective June 8, 1989, respectively coded as Article IV of Chapter 2 of the Duluth City Code, and entitled "An Ordinance Pertaining to Wages and Working Hours of Persons on Public Works in the City of Duluth", as set forth below:

(3) **Definitions.**

For the purposes of this section the following words and phrases shall have the meanings respectively ascribed to them in this section:

(a) **Basic hourly rate** - The hourly wage paid to any employee.

(b) **Prevailing wage rate** - The basic hourly rate plus fringe benefits prevailing in the city of Duluth as determined by the United States secretary of labor pursuant to the Davis-Bacon act, as amended; provided that whenever employer and employee organizations employing and representing a majority of a class of workers in a particular industry within the city jointly certify that the prevailing basic hourly rate plus fringe benefits of such workers differs from the amount determined by the secretary of labor, the certified rate shall be considered to be the prevailing wage rate for such class of workers in that industry.

(c) **Fringe benefits** - Employer contribution for health and welfare benefits, vacation benefits, pension benefits, and all other economic benefits other than the basic hourly rate.

(d) **Apprentice** - An employee who is working under a training program which is approved either by the U.S. Department of Labor Bureau of Apprenticeship & Training or the Minnesota Director of Voluntary Apprenticeship; see apprentice ratios on pages 6-7 and HUD 4010 in Section 10.

(e) **Trainee** - An employee registered with the U. S. Department of Labor Employment & Training Administration; see HUD 4010 in Section 10.

(e) **Project** - Erection, construction, demolition, painting, remodeling or repairing of any public building, highway, sidewalk, bridge, water or gas line, sewer and sewage treatment facility or other public work performed under contract with the city.

(f) **Labor, mechanic** - All persons utilized, employed or working on a project who are doing work usually done by mechanics and laborers, including proprietors, partners, and members of cooperatives.

(4) **Wage Rates and Hours for City of Duluth Projects.**

(a) Any contract which provides for a project of estimated total cost of over $2,000.00 shall contain a stipulation that no laborer, mechanic or apprentice-trainee employed directly upon the project work site by the contractor or any subcontractor shall be permitted or required to work at a rate of pay less than the prevailing wage rate; nor shall any such employee be permitted or required to work more than 8 hours in any work day **OR** 40 hours in any work week unless he is paid at a rate of at least 1½ times the basic hourly rate for all hours in excess of 8 per day **OR** 40 per week [in other words: all hours in excess of eight per day and all hours after 40 per week] and unless he receives fringe benefits that are at least equal to those in the prevailing wage rate; provided that whenever employer and employee organizations employing and representing a majority of a class of workers in a particular industry within the city jointly certify that the maximum number of hours that such persons may work under existing labor agreements before overtime wages must be paid differs from the hours specified in this paragraph, the maximum number of hours specified in such labor agreements shall be substituted for those specified above in applying the provisions of this paragraph to such workers.

(b) The word "or" in the state statute and the city of Duluth Code refers to the number of hours worked in any one week or, in the alternative, the number of hours worked in any one day in the week (the days in one week being totaled for reporting purposes); the law requires use of the alternative which results in the higher number of overtime hours for each employee whose time is being reported.

EXCEPTIONS: Federal government funding only and HUD (Housing and Urban Development) funding - see point "e'

In summary, if a project is solely funded with city of Duluth monies, city ordinance 8940 as amended allows the employees to work four ten-hour days and be paid at the regular hourly rate for those ten hours; exceeding hours must be paid at the overtime rate. An employer may not withhold overtime payment exclusively until 40 hours per week have been worked. Daily overtime must be paid as it is earned.

- **The base workweek hours must be clearly indicated on each payroll. Employees may be assigned a different workweek; however, that must be clearly marked beside the employees' names.**

The following are examples of how these rules apply to different situations.

TT refers to the total time worked on the day or in the week
RT refers to the hours worked at the regular rate of pay (straight time)
OT refers to the hours worked for which overtime must be paid

State Funded with or without federal funding Projects — City-only Funded Projects (4 ten-hour days)

	Mon	Tues	Wed	Thurs	Fri	Sat	Total		Mon	Tues	Wed	Thurs	Fri	Sat	Total
TT	10	10	10	10	0	6	46		10	10	10	10	0	6	46
RT	8	8	8	8	0	6	38		10	10	10	10	0	0	40
OT	2	2	2	2	0	0	8		0	0	0	0	0	6	6

State Funded with or without federal funding Projects — City-only Funded Projects (4 ten-hour days)

	Mon	Tues	Wed	Thurs	Fri	Sat	Total		Mon	Tues	Wed	Thurs	Fri	Sat	Total
TT	0	10	10	0	7	0	27		10	0	12	0	0	0	32
RT	0	8	8	0	7	0	23		10	0	10	10	0	0	30
OT	0	2	2	0	0	0	4		0	0	2	0	0	0	2

c) **Overtime Calculations**

Minnesota Statutes Chapter 177.42, subd 4 specifies that the prevailing hours of labor may not be more than eight hours per day or more than 40 hours per week (as stated above in (b), the City of Duluth does allow for ten hours per day/40 hours per week with City funding *only*. Example: hours exceeding eight per day are paid at 1.5 times the rate in the contract's wage decision OR the base rate the employee is being paid if it is higher than the required base rate; once 40-hours in any one week are attained, all hours exceeding that 40 are paid at 1.5 times the rate in the project contract's wage decision. See example (1) and (2) below.

Minnesota Statutes Chapter 177.42, subd 5 defines the hourly basic rate as the hourly wage paid to any employee. (subd 6): The prevailing wage rate means the hourly basic rate of pay plus the contribution for health and welfare benefits, vacation benefits, pension benefits, and any other economic benefit paid to the largest number of workers engaged in the same class of labor within the area...

Minnesota Statutes Chapter 177.43, subd 1 (1) ...employees are permitted to work more hours than the prevailing hours of labor [being] paid for all hours in excess of the prevailing hours at a rate of at least 1-½ times the hourly basic rate of pay. (2) A laborer or mechanic may not be paid a lesser rate of wages than the prevailing wage rate in the same or most similar trade or occupation in the area.

An employer may pay a lower **regular time/straight time** hourly rate and higher fringe benefit rate--to a bona fide plan--than stated in the contract's wage decision providing the total of the two rates is equal to or greater than the total in the wage decision; however, the **OVERTIME rate** must be paid on the higher rate in the contract's wage decision.

(1) Overtime Calculation with Fringe Benefits Paid to Bona Fide Plans

For overtime purposes, an employer paying higher fringe benefits to a bona fide plan and paying a lower hourly rate MUST calculate the overtime on the higher hourly rate as stated in the project contract's wage decision. The fringe benefit amount may be reduced to reflect any increase in the total prevailing wage package IF the plan administrator permits such a reduction. This acceptance must be verified in writing by the plan administrator and attached to the appropriate certified payroll report.

(2) Overtime Calculation with Cash Payment of Fringe Benefits

When the fringe benefit is paid directly to an employee, the prevailing base rate and the fringe benefit rate as established in the project contract's wage decision for a specific classification are totaled to arrive at the hourly rate. *Overtime is calculated at 1.5 x the base rate of the wage decision with the fringe benefit amount added to that rate: base rate of the wage decision x 1.5 + fringe benefit rate = overtime rate.*

Contract Work Hours and Safety Standards Act

[Refer to page two of this document.] All projects valued at $100,000 or greater are subject to this Act. As with Minnesota Statutes Chapter 177.43, the overtime rate is calculated as in items one and two above OR (e) below.

(d) A contractor shall not reduce a worker's private, regular rate of pay when the wage rate certified by the U. S. Department of Labor or the Minnesota Department of Labor & Industry is less than the worker's normal hourly wage [Minnesota Statute 181.03 subdivision 1(2)].

(e) **Regular Time & Overtime Definitions**

• **State of Minnesota** funded projects with or without federal funding *only allow for five eight-hour days per week at regular time.* Overtime is calculated at a rate not less than time and one-half (1.5) of the prevailing base rate as stated in the wage decision OR the base rate the employee is being paid if it is higher than the required base rate--plus the straight time fringe benefit amount. (see (1) above for example when a lower base rate and higher fringe are paid)

• **City of Duluth** funded projects do permit four ten-hour work days at regular time–see point 4-a, b for stipulations. Overtime is calculated at a rate not less than time and one-half (1.5) of the prevailing base rate as stated in the wage decision--OR the base rate the employee is being paid if it is higher than the required base rate--plus the straight time fringe benefit amount. (see (1) above for example when a lower base rate and higher fringe are paid)

• **Federal** funded only projects allow overtime pay for hours worked in excess of 40 in a workweek at a rate not less than time and one-half (1.5) of the prevailing base rate as stated in the wage decision OR the base rate the employee is being paid if it is higher than the required base rate--plus the straight time fringe benefit amount.

• **HUD** funded projects allow overtime pay for hours worked in excess of 40 in a workweek at a rate not less than time and one-half (1.5) of the prevailing base rate as stated in the wage decision OR the base rate the employee is being paid if it is higher than the required base rate--plus the straight time fringe benefit amount.

** When a combination of funding sources are included in any one project, the most strict requirements will apply.

(f) The minimum hourly prevailing wages are contained in each project specification. When both federal (general decision rates from the U. S. Department of Labor) and State of Minnesota prevailing wages for state funded construction projects from the Minnesota Department of Labor and Industry are used, the prime contractor and all subcontractors including trucking operations, are required to **pay the higher of the two wages** for all laborers and mechanics [MnDOT Contract Administration Manual, Section 5-591.320].

(g) The prime contractor and any lower-tier subcontractor shall review all wage decisions and compensate a worker according to the type of work performed and at the rate that is the greatest.

(h) State of Minnesota prevailing wages typically list two rates for each classification with two effective dates. Should any City of Duluth contract continue to and past the second effective date, that rate and fringe benefit will be in effect through the remainder of the project.

(i) **Mn/DOT Statement of Compliance is required on all city of Duluth construction projects (regardless of the project funding source) with each weekly certified payroll report.** web site: http://dot.state.mn.us/const/labor/forms.html

(j) All contracts for city projects shall have applicable schedules of prevailing wage rates set forth in the contract. Schedules of applicable prevailing wage rates shall be posted on all project job sites for public review and shall be protected from the weather.

(k) Employees on projects shall be paid at least **weekly**. Fringe benefits shall be paid either in cash or to an employee benefit plan that has been approved by the U.S. Department of Labor. ■ **The fringe benefit package is an integral portion of the prevailing wage. Should the prime contractor or any subcontractor (regardless of tier) become delinquent with any fringe benefit plan administrator's requirements for monthly payment, the monthly estimate(s) may be withheld until the plan payments are made current.** (city ordinance 8940 6-18-89 plus amendments)
See MnDOT Specification 1906 on page nine and Section 5 of this document: Contract Compliance.
See Statement of Compliance and Certified Payroll Report requirements in Section 10, HUD 4010 and web sites in Section 14, Forms.

(l) Any contractor or subcontractor working on a project shall furnish the City with **original** certified payroll reports with **original signatures** relating to the project. Such certified payroll reports shall be **submitted weekly** on U.S. Department of Labor standard forms (WH-347) or their equivalent–using the same format--to the City of Duluth Labor Standards representative. All City of Duluth funded projects must have the base workweek hours indicated on the certified payroll form and/or beside each employee's name (should some employees be working different base workweeks).

(m) No contractor or subcontractor working on a project shall evade or attempt to evade the provisions of this section through the use of non-recognized training programs. The only employees involved in training programs that shall be allowed to work on projects covered by this section shall be apprentice-trainees as defined by this article.

(n) Any person violating the provisions of this section shall be guilty of a misdemeanor with each day of violation constituting a separate offense. In addition, if the prevailing wage rate and accompanying fringe benefit rate is not paid to employees working on a project, the City of Duluth may withhold contract payments to the prime contractor until such deficiencies are corrected. Should fringe benefits be paid to authorized Plans, the payments must be made within the demands of those Plans. Delinquencies may result in withholding of project funds to the prime contractor.

(o) This section shall not apply to contracts for projects where the total cost of the project is less than $2,000.00; nor to materialmen who do no more than deliver materials to the work site, **except** that this section shall apply to employees who deliver asphalt, concrete or mineral aggregate such as sand, gravel or stone where such material is incorporated into the project by depositing the material substantially in place, either directly or through spreaders, from the transporting vehicle.

(5) **Helpers**

A helper may perform work *only* if the helper classification is specified and defined in the federal wage decision and/or State of Minnesota wage decision incorporated into the project contract. Without such a helper classification, the contractor must assign a job classification that is the "same or most similar" [Minnesota Statute 177.44, subdivision 1] and compensate the helper for the actual work performed regardless of the helper's skill level.

(6) **Apprentice Ratios**

Journeyworkers must be on site with the apprentices and their hours must match.

FUNDING SOURCE:

City of Duluth and State of Minnesota with or without Federal funding

- Apprentices are not permitted to work alone under any circumstances.
- Working foremen are acceptable as a journeyworker PROVIDING he/she is in the same classification.
  - » Example: carpenter foreman and carpenter apprentice
- Ratios are determined by the trade's labor agreement.
- In the absence of ratio language, the following State of Minnesota apprenticeship ratios will be applied:
  (apprentice : journeyworker) 1:1 2:4 3:7 4:10, etc.

- Employees working in excess of the allowable ratio must be paid the full journeyworker compensation.
- Out-of-ratio apprentices will be calculated beginning with the **apprentice at the highest level of training** and, then, to less senior apprentices in their rank order.
- Should two or more out-of-ratio apprentices have the same level of training, whomever was on the work site first will receive journeyworker pay; if the apprentices at the same level of training began work on the project site at the same time, hours worked out-of-ratio for which restitution is due will be divided among those apprentices.

Examples:

Four apprentices working unsupervised are on site. [4:0]
Ratio calls for four apprentices and ten journeyworkers [4:10]
Correction: all apprentices will receive the full journeyworker compensation as apprentices are not permitted to work alone.

Three apprentices and two journeyworkers are on site. [3:2]
Ratio calls for three apprentices and seven journeyworkers [3:7]
Two journeyworkers may accompany only one apprentice; therefore, the two highest level apprentices are paid the full journeyworker compensation.
Even though this particular job has three apprentices–the second journeyworker is a mute point; a third journeyworker would also be a mute point in this example.
Correction: the two highest level apprentices are paid the full journeyworker compensation and the third lower level apprentice is considered in ratio.

H U D (CDBG) and Federal funding only

- Apprentices are not permitted to work alone unless the U. S. Department of Labor-approved agreement allows that practice.
- Working foremen are acceptable as a journeyworker PROVIDING he/she is in the same classification.
  » Example: electrician foreman and electrician apprentice
- Ratios are determined by the trade's U. S. Department of Labor-approved agreement.
- In the event of the absence of ratio language in the applicable agreement, the Minnesota Department of Labor ratio of one apprentice for the first journeyworker and one apprentice for each three journeyworkers thereafter will be applied, (i.e., 1:1, 2:4, 3:7, 4:10, etc.).

- The **legal apprentices are those who first came to work on the job site;** in the event that all apprentices begin work on the project site at the same time, hours worked out-of-ratio for which restitution is due will be divided among the apprentices.
- Time cards will be required to substantiate the start times.
- Employees working in excess of the allowable ratio--or for which U. S. Department of Labor-apprentice agreement/certificate is not provided–must be paid the full journeyworker compensation.

Examples:

Four apprentices and one journeyworker are on site. [4:1]
Ratio calls for four apprentices and ten journeyworkers. [4:10]
The first apprentice on site is considered in ratio as one journeyworker may only accompany one apprentice [1:1]; this particular job has four apprentices.
Correction: the second through the fourth apprentices coming on site are paid the full journeyworker compensation.

Six apprentices and two journeyworkers are on site [6:2]
Ratio calls for six apprentices and sixteen journeyworkers [6:16]
The first apprentice on site is considered in ratio as two journeyworkers may only accompany one apprentice; this particular job has six apprentices–the second journeyworker is a mute point.
Correction: the second through sixth apprentices coming on site are paid the full journeyworker compensation.

(7) **Poster Boards**

The prime contractor must construct and display a poster board, which contains all required posters, is legible and is accessible to all workers from the first day of work until the project is 100% complete. Posters must be protected from the weather. Prime contractors are not allowed to place a poster board at an off-site facility location.

(8) **Trucking Issues**

a) For the purpose of sections seven and eight, the term "owner" includes all persons having an ownership interest in the trucking entity or a partnership interest in the trucking entity and has a legal and rightful title to the vehicle(s) or has an approved lease on the vehicle(s). "Operate" means the owner either physically drives the vehicle or hires another to physically drive the vehicle; yet, maintains the right to direct the day-to-day operations of the vehicle.

b) Trucking Operations Definitions: See MN Rule 5200.1106 web site: https://www.revisor.mn.gov/rules/?id=5200.1106

Independent Trucking Operator: an individual or partnership who owns or holds a vehicle under lease and who contracts that vehicle and the owner's services to an entity which provides construction services to a public works project. The individual owns or leases and drives the equipment, is responsible for the maintenance of the equipment, bears all operating costs, determines the details and means of performing the services, and enters into a legally binding agreement that specifies the relationship to be that of an independent contractor and not that of an employee.

Multiple Truck Operations: any legal business entity that owns more than one vehicle and hires the vehicles out for services to brokers or contractors on public works projects. The owners of a trucking firm may either drive the vehicles or hire employees to drive the vehicles. Employee drivers are subject to the appropriate prevailing wage rate. The owner driving a vehicle is obligated to account for the value of his/her services as a driver at the appropriate prevailing wage.

Partnerships: a legal business entity where two or more individuals hold vehicles under lease and contract those vehicles and their services to an entity which provides construction services to a public works project. The partners own or lease the equipment, are responsible for maintenance and all operating costs, drive the equipment, determine the details and means of performing the services, and enter a legally binding agreement that specifies the

relationship to be that of a partner and not that of an employee. All partners are subject to the appropriate prevailing wage per city of Duluth ordinance 8940 as amended.

Corporation: any legal business entity that owns or leases vehicles to provide construction services to public works projects. All individuals are employees of the corporation and subject to the appropriate prevailing wage regardless of title or position.

Broker: an individual or firm who (activities include, but are not limited to):

- contracts to **provide** trucking services [equipment and driver] in the construction industry to users of such services, such as prime contractors and various subcontractors of the prime;
- contracts to **obtain** services from other trucking operations and dispatches them to various assignments;
- receives payment from the users (such as prime contractors and various subcontractors) in consideration for the trucking services provided; and
- makes payment to the providers (trucking operations so contracted with) for their services.

(9) **Specific documentation from trucking operations.**

Independent Trucking Operators

The owner/operator of a truck must submit a copy of his/her commercial driver's license (CDL), cab card, and insurance certificate for each truck the owner/operator drives on each construction project *before commencing work* on that project. These documents must be sent to the prime contractor who will then forward the material to Labor Standards, Engineering Division at the City of Duluth.

Multiple Truck Operators

Weekly certified payrolls and payment of corresponding prevailing wages plus the fringe benefit package will be required for each project where trucks are operating. This covers the owner plus all employees performing work on the project.

Partnerships

Weekly certified payrolls and payment of corresponding prevailing wages plus fringe benefit packages will be required for each project where trucks are operating. This covers all partners of the organization who perform work on the project.

Each partner performing work on a project must submit a copy of his/her commercial driver's license (CDL), cab card, and insurance certificate for the truck being operated with that weekly certified payroll. It is not necessary to repeat such supporting documentation until a different truck is used and/or certificates or licenses have expired.

Employees of the partnership are always reported on a weekly certified payroll and paid the appropriate prevailing wage plus fringe benefit package for the work being performed.

Corporations

All persons employed by the corporation are subject to receive payment of the prevailing wage plus the fringe benefit package for the work performed on a project regardless of title or position. Weekly certified payrolls must be submitted for all work performed on the project.

Brokers

Truck ownership and a **bonafide contract** between the broker and another trucking operation, a prime contractor, or a subcontractor must be identified. Paperwork must be submitted with the month end trucking report to the city of Duluth Labor Standards representative - Engineering. Certified payrolls are not required when the above documentation is provided and approved.

(10) **Month End Trucking Report - ONLY REQUIRED WITH STATE OF MINNESOTA FUNDING**

The Minnesota Department of Transportation Month End Trucking Report Form A and Form B plus Minnesota Department of Transportation Month End Trucking Report Statement of Compliance are *only required on state funded projects*.

A guide for completing the forms including definitions and the reports, themselves, may be downloaded from:

www.dot.state.mn.us/const/labor/forms.html

Payment to the prime contractor may be withheld until documentation is received and approved.

(11) **Truck Rental Rates - ONLY REQUIRED WITH STATE OF MINNESOTA FUNDING**

Truck rental rates are listed in the prevailing wage section of the project specifications.

(12) **Minnesota Rules 5200.1105 and 5200.1106**

These rules are incorporated into this supplementary general conditions part II by reference and are found on these web sites:

www.revisor.mn.gov/rules/?id=5200

(13) **Truck Axles** web site: https://www.revisor.mn.gov/rules/?id=5200.1100

Per Minnesota Rules 5200.1100 Master Job Classifications, a truck "unit" refers to all axles including the steering axle. A tag axle is also counted as one of the axles. Examples: four rear axles plus one steering axle = five axles total one rear axle plus one steering axle = two axles total

(14) **Non-Compliance and Enforcement**

a) The prime contractor shall be liable for any unpaid wages to its workers or those of its lower-tier subcontractors, trucking companies/Multiple Truck Owners (MTO's) and/or Independent Truck Owner/Operator (ITOs) [MnDOT Standard Specifications for Construction, Section 1801].

b) See Section 9, MnDOT Specification 1906 Partial Payments and Section 5, page two of this document.

c) City of Duluth ordinance 8940 as amended.

(15) **IC-134 form - Withholding Affidavit for Contractors**

The IC-134 form will be required from all Multiple Truck Operators, Partnerships, and Corporations performing trucking services on a project before the retainage or all remaining funds can be released. Web site for completing form online: www.mndor.state.mn.us

The form, itself, is found at: and www.taxes.state.mn.us/Forms_and_Instructions/ic134.pdf

(16) **Owners, Supervisors, Foremen listed on certified payrolls.**

All persons working on a City of Duluth project including owners, partners, supervisors, salaried persons, and working foremen who perform laborer and/or mechanic work shall be reported on the weekly certified payroll reports including all data required of any laborer or mechanic. (ordinance 8731, 6/24/85 and 8940 as amended).

(17) **Supporting documentation**.

At his/her discretion, the City of Duluth employee responsible for prevailing wage labor standards may demand proof of payment of the prevailing wage which may include copies of a payroll register, itemized time sheet and matching cancelled check, or any other supporting documents as stipulated. Payment to the prime contractor may be withheld until documentation is received and approved.

(18) **Kickbacks from Public Works employees prohibited**.

No contractor working on a project or other person shall, by force intimidation, or threat of termination of employment, cause any employee working on a project to give up any part of the compensation to which he is entitled under his contract of employment.

Section 9
Minnesota Department of Transportation Specification 1906 Partial Payments
Process For "Withholding Contract Monies" and "Default and Termination of a Contract" 11/5/04

Mn/DOT Specification 1906 Partial Payments describes the Commissioner's authority to withhold funds to protect the Department's interests. In addition, Specification 1808 Default and Termination of a Contract describes the Commissioner's authority to take the prosecution of the work out of the hands of the Contractor.
Additionally, on projects funded in whole or part with federal funds and in accordance with the Required Contract Provisions Federal-Aid Construction Contracts Form – 1273, Section IV, Subpart 6, "Withholding", incorporated into federal aid contracts, the Contracting Officer may, after written notice to the Contractor, take such action as may be necessary to cause the suspension of any further payment, advance or guarantee of funds until such violations have ceased.

However, the Department must give the Contractor, and it's Sureties due notice prior to exercising these authorities. The withholding of contract funds, in accordance with Specification 1906 or the Required Contract Provisions Federal-Aid Construction Contracts Form – 1273, Section IV, Subpart 6, "Withholding", should be implemented as soon as a possible prevailing wage violation is recognized. However, Default and Termination of a Contract, in accordance with Specification 1808, should only be exercised as a "last resort" if the Contractor is not willing to comply.

Definitions

(Mn/DOT Standard Specifications for Construction 2000 Edition, Section 1103)
Commissioner: The Commissioner of the Minnesota Department of Transportation, or the chief executive of the department or agency constituted for administration of Contract work with its jurisdiction.
Contractor: The individual, firm or corporation Contracting for and undertaking prosecution of the prescribed work; the party of the second part to the Contract, acting directly or through a duly authorized representative.
Department: The Department of Transportation or the State of Minnesota, or the political subdivision, governmental body, board, commission, office, department, division, or agency constituted for administration of the Contract work within its jurisdiction.

(Form 1273 - 29 CFR, Part 5.1, Definitions)

Contracting Officer: The individual, a duly appointed successor or authorized representative who is designated and authorized to enter into Contracts on behalf of the Federal Agency and/or the City of Duluth.

Important Considerations

1. Upon completion of the work under a contract, the department should consider issuing the final voucher as soon as possible. Failure to finalize a contract expeditiously could result in subsequent claims that would prevent the department from finalizing the contract. However, before the issuance of the final voucher, the department must be able to ensure that the terms of the contract have been satisfied. Failure on the part of the department to ensure compliance could result in the Mn/DOT state aid division retaining funds from the department in accordance with *Minnesota Rules 8820.3000, subpart 5*.

2. On every contract, the department should withhold the final retainage in accordance with the following guidelines: (1) if the total amount of the contract is $1,000,000 or more, the department should retain funds not more than $50,000, (2) if the total amount of the contract is less than $1,000,000, the department should retain 5% of the total contract, (3) retainage should be withheld until the department can ensure that the contractor has met the terms of the contract or until the finalization of the contract.

3. This guide specifies that the department verbally notify the bonding company early in the process. Generally, as a "rule of thumb", notifying the bonding company is usually the "last resort". However, the justification for the early notification is related to the language found in *Minnesota statute 574.31, subdivision 2,* which summarizes that if an individual or the department does not submit a claim on the payment bond within 120 days after the completion of work under the contract, the claim can be denied.

The following are general guidelines that should be followed prior to placing a Contractor in default:

Step 1: Upon verbal or written notification that a possible prevailing wage violation exists, the Department should give written notice to the Contractor regarding the nature of the claim, along with the Department's intent to withhold monies until the claim is investigated and determined to be in compliance. Additionally, the Department should inform the Contractor that the bonding company has been verbally notified of the claim. Please be aware, the Department should ensure employee confidentiality at all times.

Step 2: Upon a preliminary determination surrounding the financial extent of the claim, the Department should consider retaining a "reasonable" portion of one or more partial estimates in accordance with Mn/DOT's 2000 Standard Specifications for Construction, Section 1906; or on federal aid contracts, in accordance with the Required Contract Provisions Federal-Aid Construction Contracts Form – 1273, Section IV, Subpart 6, "Withholding".

Step 3: If it is determined that the claim is valid, the Department should schedule a meeting with the Contractor and attempt to resolve the matter. If the claim is determined to be invalid, the Department should release any partial estimates that may have been held as a result of the claim. However, the Department should continue to withhold the final retainage in accordance with the above-mentioned: *Important Considerations, 2*.

Step 4: If resolution cannot be obtained through a meeting, the Department should order the Contractor, in writing, to complete their obligations under the contract. The letter should clearly state the circumstances under which the Department has deemed that the Contractor has not met the terms of the contract. Additionally, the Department should include a reasonable deadline for this obligation to be completed. A copy of this letter should be forwarded to the Surety, District State Aid Engineer (DSAE), Labor Compliance Unit and the Department's Attorney.

Step 5: In the event that the Contractor does not respond to the Department's written order, the Department should send a similar letter, requesting that the Contractor respond immediately, in writing, regarding the Contractor's intention to comply or not comply with the order. A copy of this letter should be forwarded to the Surety, District State Aid Engineer (DSAE), Labor Compliance Unit and the Department's Attorney.

Step 6: If the Department still does not get a proper response from the Contractor, the Department should write another letter, addressed to both the Contractor and the Surety, specifying all the facts of the alleged breach, demanding that the Contractor, or its Surety, respond satisfactorily within 10 days or the Department may exercise its authority to Default and Terminate the Contract in accordance within/DOT's 2000 Specifications for Construction, Section

1808. It's important to provide sufficient detail so that the Surety understands the situation. This notification should be sent by certified mail. A copy of this letter should be forwarded to the Surety, District State Aid Engineer (DSAE), Labor Compliance Unit and the Department's Attorney.

Step 7: If the Contractor or Surety is unresponsive after 10 days, the Department should consult with their attorney to consider proceeding with Default and Termination of the Contract.

Step 8: Upon termination of the contract, the Department provides a written order to the Surety, requiring the Surety to bring resolution to the prevailing wage violation.

Step 9: The Department places the Contractor on a Non-Responsible Bidder's List and rejects any future awards.

Section 10

Federal Labor Standards Provisions U.S. Department of Housing and Urban Development Office of Labor Relations

Previous editions are obsolete Page 1 of 5 form **HUD-4010 (06/2009**) ref. Handbook 1344.1

Applicability

The Project or Program to which the construction work covered by this contract pertains is being assisted by the United States of America and the following Federal Labor Standards Provisions are included in this Contract pursuant to the provisions applicable to such Federal assistance.

A. 1. (i) Minimum Wages. All laborers and mechanics employed or working upon the site of the work, will be paid unconditionally and not less often than once a week, and without subsequent deduction or rebate on any account (except such payroll deductions as are permitted by regulations issued by the Secretary of Labor under the Copeland Act (29 CFR Part 3), the full amount of wages and bona fide fringe benefits (or cash equivalents thereof) due at time of payment computed at rates not less than those contained in the wage determination of the Secretary of Labor which is attached hereto and made a part hereof, regardless of any contractual relationship which may be alleged to exist between the contractor and such laborers and mechanics.

Contributions made or costs reasonably anticipated for bona fide fringe benefits under Section l(b)(2) of the Davis-Bacon Act on behalf of laborers or mechanics are considered wages paid to such laborers or mechanics, subject to the provisions of 29 CFR 5.5(a)(1)(iv); also, regular contributions made or costs incurred for more than a weekly period (but not less often than quarterly) under plans, funds, or programs, which cover the particular weekly period, are deemed to be constructively made or incurred during such weekly period.

Such laborers and mechanics shall be paid the appropriate wage rate and fringe benefits on the wage determination for the classification of work actually performed, without regard to skill, except as provided in 29 CFR 5.5(a)(4). Laborers or mechanics performing work in more than one classification may be compensated at the rate specified for each classification for the time actually worked therein: Provided, That the employer's payroll records accurately set forth the time spent in each classification in which work is performed. The wage determination (including any additional classification and wage rates conformed under 29 CFR 5.5(a)(1)(ii) and the Davis-Bacon poster (WH-1321) shall be posted at all times by the contractor and its subcontractors at the site of the work in a prominent and accessible, place where it can be easily seen by the workers.

(ii) (a) Any class of laborers or mechanics which is not listed in the wage determination and which is to be employed under the contract shall be classified in conformance with the wage determination. HUD shall approve an additional classification and wage rate and fringe benefits therefore only when the following criteria have been met:

(1) The work to be performed by the classification requested is not performed by a classification in the wage determination; and

(2) The classification is utilized in the area by the construction industry; and

(3) The proposed wage rate, including any bona fide fringe benefits, bears a reasonable relationship to the wage rates contained in the wage determination.

(b) If the contractor and the laborers and mechanics to be employed in the classification (if known), or their representatives, and HUD or its designee agree on the classification and wage rate (including the amount designated for fringe benefits where appropriate), a report of the action taken shall be sent by HUD or its designee to the Administrator of the Wage and Hour Division, Employment Standards Administration, U.S. Department of Labor, Washington, D.C. 20210. The Administrator, or an authorized representative, will approve, modify, or disapprove every additional classification action within 30 days of receipt and so advise HUD or its designee or will notify HUD or its designee within the 30-day period that additional time is necessary. (Approved by the Office of Management and Budget under OMB control number 1215-0140.)

(c) In the event the contractor, the laborers or mechanics to be employed in the classification or their representatives, and HUD or its designee do not agree on the proposed classification and wage rate (including the amount designated for fringe benefits, where appropriate), HUD or its designee shall refer the questions, including the views of all interested parties and the recommendation of HUD or its designee, to the Administrator for determination. The Administrator, or an authorized representative, will issue a determination within 30 days of receipt and so advise HUD or its designee or will notify HUD or its designee within the 30-day period that additional time is necessary. (Approved by the Office of Management and Budget under OMB Control Number 1215-0140.)

(d) The wage rate (including fringe benefits where appropriate) determined pursuant to subparagraphs (1)(ii)(b) or (c) of this paragraph, shall be paid to all workers performing work in the classification under this contract from the first day on which work is performed in the classification.

(iii) Whenever the minimum wage rate prescribed in the contract for a class of laborers or mechanics includes a fringe benefit which is not expressed as an hourly rate, the contractor shall either pay the benefit as stated in the wage determination or shall pay another bona fide fringe benefit or an hourly cash equivalent thereof.

(iv) If the contractor does not make payments to a trustee or other third person, the contractor may consider as part Previous editions are obsolete Page 2 of 5 form **HUD-4010** (06/2009) ref. Handbook 1344.1 of the wages of any laborer or mechanic the amount of any costs reasonably anticipated in providing bona fide fringe benefits under a plan or program, Provided, That the Secretary of Labor has found, upon the written request of the contractor, that the applicable standards of the Davis-Bacon Act have been met. The Secretary of Labor may require the contractor to set aside in a separate account assets for the meeting of obligations under the plan or program. (Approved by the Office of Management and Budget under OMB Control Number 1215-0140.)

2. Withholding. HUD or its designee shall upon its own action or upon written request of an authorized representative of the Department of Labor withhold or cause to be withheld from the contractor under this contract or any other Federal contract with the same prime contractor, or any other Federally-assisted contract subject to Davis-Bacon prevailing wage requirements, which is held by the same prime contractor so much of the accrued payments or advances as may be considered necessary to pay laborers and mechanics, including apprentices, trainees and helpers, employed by the contractor or any subcontractor the full amount of wages required by the contract In the event of failure to pay any laborer or mechanic, including any apprentice, trainee or helper, employed or working on the site of the work, all or part of the wages required by the contract, HUD or its designee may, after written notice to the contractor, sponsor, applicant, or owner, take such action as may be necessary to cause the suspension of any further payment, advance, or guarantee of funds until such violations have ceased. HUD or its designee may, after written notice to the contractor, disburse such amounts withheld for and on account of the contractor or subcontractor to the respective employees to whom they are due. The Comptroller General shall make such disbursements in the case of direct Davis-Bacon Act contracts.

3. (i) Payrolls and basic records. Payrolls and basic records relating thereto shall be maintained by the contractor during the course of the work preserved for a period of three years thereafter for all laborers and mechanics working at the site of the work. Such records shall contain the name, address, and social security number of each such worker, his or her correct classification, hourly rates of wages paid (including rates of contributions or costs anticipated for bona fide fringe benefits or cash equivalents thereof of the types described in Section l(b)(2)(B) of the Davis-bacon Act), daily and weekly number of hours worked, deductions made and actual wages paid. Whenever the Secretary of Labor has found under 29 CFR 5.5 (a)(1)(iv) that the wages of any laborer or mechanic include the amount of any costs reasonably anticipated in providing benefits under a plan or program described in Section l(b)(2)(B) of the Davis-Bacon Act, the contractor shall maintain records which show that the commitment to provide such benefits is enforceable, that the plan or program is financially responsible, and that the plan or program has been communicated in writing to the laborers or mechanics affected, and records which show the costs anticipated or the actual cost incurred in providing such benefits. Contractors employing apprentices or trainees under approved programs shall maintain written evidence of the registration of apprenticeship programs and certification of trainee programs, the registration of the apprentices and trainees, and the ratios and wage rates prescribed in the applicable programs. (Approved by the Office of Management and Budget under OMB Control Numbers 1215-0140 and 1215-0017.)

(ii) (a) The contractor shall submit weekly for each week in which any contract work is performed a copy of all payrolls to HUD or its designee if the agency is a party to the contract, but if the agency is not such a party, the contractor will submit the payrolls to the applicant sponsor, or owner, as the case may be, for transmission to HUD or its designee. The payrolls submitted shall set out accurately and completely all of the information required to be maintained under 29 CFR 5.5(a)(3)(i) except that full social security numbers and home addresses shall not be included on weekly transmittals. Instead the payrolls shall only need to include an individually identifying number for each employee (e.g., the last four digits of the employee's social security number). The required weekly payroll information may be submitted in any form desired. Optional Form WH-347 is available for this purpose from the Wage and Hour Division Web site at *http://www.dol.gov./whd/wh347.pdf* or its successor site. The prime contractor is responsible for the submission of copies of payrolls by all subcontractors. Contractors and subcontractors shall maintain the full social security number and current address of each covered worker, and shall provide them upon request to HUD or its designee if the agency is a party to the contract, but if the agency is not such a party, the contractor will submit the payrolls to the applicant sponsor, or owner, as the case may be, for transmission to HUD or its designee, the contractor, or the Wage and Hour Division of the Department of Labor for purposes of an investigation or audit of compliance with prevailing wage requirements. It is not a violation of this subparagraph for a prime contractor to require a subcontractor to provide addresses and social security numbers to the prime contractor for its own records, without weekly submission to HUD or its designee. (Approved by the Office of Management and Budget under OMB Control Number 1215-0149.)

(b) Each payroll submitted shall be accompanied by a "Statement of Compliance," signed by the contractor or subcontractor or his or her agent who pays or supervises the payment of the persons employed under the contract and shall certify the following:

(1) That the payroll for the payroll period contains the information required to be provided under 29 CFR 5.5 (a)(3)(ii), the appropriate information is being maintained under 29 CFR 5.5(a)(3)(i), and that such information is correct and complete;

Previous editions are obsolete; Page 3 of 5 form **HUD-4010** (06/2009) ref. Handbook 1344.1

(2) That each laborer or mechanic (including each helper, apprentice, and trainee) employed on the contract during the payroll period has been paid the full weekly wages earned, without rebate, either directly or indirectly, and that no deductions have been made either directly or indirectly from the full wages earned, other than permissible deductions as set forth in 29 CFR Part 3;

(3) That each laborer or mechanic has been paid not less than the applicable wage rates and fringe benefits or cash equivalents for the classification of work performed, as specified in the applicable wage determination incorporated into the contract.

(c) The weekly submission of a properly executed certification set forth on the reverse side of Optional Form WH-347 shall satisfy the requirement for submission of the "Statement of Compliance" required by subparagraph A.3.(ii)(b).

(d) The falsification of any of the above certifications may subject the contractor or subcontractor to civil or criminal prosecution under Section 1001 of Title 18 and Section 231 of Title 31 of the United States Code.

(iii) The contractor or subcontractor shall make the records required under subparagraph A.3.(i) available for inspection, copying, or transcription by authorized representatives of HUD or its designee or the Department of Labor, and shall permit such representatives to interview employees during working hours on the job. If the contractor or subcontractor fails to submit the required records or to make them available, HUD or its designee may, after written notice to the contractor, sponsor, applicant or owner, take such action as may be necessary to cause the suspension of any further payment, advance, or guarantee of funds. Furthermore, failure to submit the required records upon request or to make such records available may be grounds for debarment action pursuant to 29 CFR 5.12.

4. Apprentices and Trainees.

(i) Apprentices. Apprentices will be permitted to work at less than the predetermined rate for the work they performed when they are employed pursuant to and individually registered in a bona fide apprenticeship program registered with the U.S. Department of Labor, Employment and Training Administration, Office of Apprenticeship Training, Employer and Labor Services, or with a State Apprenticeship Agency recognized by the Office, or if a person is employed in his or her first 90 days of probationary employment as an apprentice in such an apprenticeship program, who is not individually registered in the program, but who has been certified by the Office of Apprenticeship Training, Employer and Labor Services or a State Apprenticeship Agency (where appropriate) to be eligible for probationary employment as an apprentice. The allowable ratio of apprentices to journeymen on the job site in any craft classification shall not be greater than the ratio permitted to the contractor as to the entire work force under the registered program. Any worker listed on a payroll at an apprentice wage rate, who is not registered or otherwise employed as stated above, shall be paid not less than the applicable wage rate on the wage determination for the classification of work actually performed. In addition, any apprentice performing work on the job site in excess of the ratio permitted under the registered program shall be paid not less than the applicable wage rate on the wage determination for the work actually performed. Where a contractor is performing construction on a project in a locality other than that in which its program is registered, the ratios and wage rates (expressed in percentages of the journeyman's hourly rate) specified in the contractor's or subcontractor's registered program shall be observed. Every apprentice must be paid at not less than the rate specified in the registered program for the apprentice's level of progress, expressed as a percentage of the journeymen hourly rate specified in the applicable wage determination. Apprentices shall be paid fringe benefits in accordance with the provisions of the apprenticeship program. If the apprenticeship program does not specify fringe benefits, apprentices must be paid the full amount of fringe benefits listed on the wage determination for the applicable classification. If the Administrator determines that a different practice prevails for the applicable apprentice classification, fringes shall be paid in accordance with that determination. In the event the Office of Apprenticeship Training, Employer and Labor Services, or a State Apprenticeship Agency recognized by the Office, withdraws approval of an apprenticeship program, the contractor will no longer be permitted to utilize apprentices at less than the applicable predetermined rate for the work performed until an acceptable program is approved.

(ii) Trainees. Except as provided in 29 CFR 5.16, trainees will not be permitted to work at less than the predetermined rate for the work performed unless they are employed pursuant ',to and individually registered in a program which has received prior approval, evidenced by formal certification by the U.S. Department of Labor, Employment and Training Administration. The ratio of trainees to journeymen on the job site shall not be greater than permitted under the plan approved by the Employment and Training Administration. Every trainee must be paid at not less than the rate specified in the approved program for the trainee's level of progress, expressed as a percentage of the journeyman hourly rate specified in the applicable wage determination. Trainees shall be paid fringe benefits in accordance with the provisions of the trainee program. If the trainee program does not mention fringe benefits, trainees shall be paid the full amount of fringe benefits listed on the wage determination unless the Administrator of the Wage and Hour Division determines that there is an apprenticeship program associated with the corresponding

journeyman wage rate on the wage determination which provides for less than full fringe benefits for apprentices. Any employee listed on the payroll at a trainee rate who is not registered and participating in a training plan approved by
Previous editions are obsolete; Page 4 of 5 form **HUD-4010** (06/2009) ref. Handbook 1344.1
the Employment and Training Administration shall be paid not less than the applicable wage rate on the wage determination for the work actually performed. In addition, any trainee performing work on the job site in excess of the ratio permitted under the registered program shall be paid not less than the applicable wage rate on the wage determination for the work actually performed. In the event the Employment and Training Administration withdraws approval of a training program, the contractor will no longer be permitted to utilize trainees at less than the applicable predetermined rate for the work performed until an acceptable program is approved.

(iii) Equal employment opportunity. The utilization of apprentices, trainees and journeymen under 29 CFR Part 5 shall be in conformity with the equal employment opportunity requirements of Executive Order 11246, as amended, and 29 CFR Part 30.

5. Compliance with Copeland Act requirements. The contractor shall comply with the requirements of 29 CFR Part 3 which are incorporated by reference in this contract

6. Subcontracts. The contractor or subcontractor will insert in any subcontracts the clauses contained in subparagraphs 1 through 11 in this paragraph A and such other clauses as HUD or its designee may by appropriate instructions require, and a copy of the applicable prevailing wage decision, and also a clause requiring the subcontractors to include these clauses in any lower tier subcontracts. The prime contractor shall be responsible for the compliance by any subcontractor or lower tier subcontractor with all the contract clauses in this paragraph.

7. Contract termination; debarment. A breach of the contract clauses in 29 CFR 5.5 may be grounds for termination of the contract and for debarment as a contractor and a subcontractor as provided in 29 CFR 5.12.

8. Compliance with Davis-Bacon and Related Act Requirements. All rulings and interpretations of the Davis-Bacon and Related Acts contained in 29 CFR Parts 1, 3, and 5 are herein incorporated by reference in this contract

9. Disputes concerning labor standards. Disputes arising out of the labor standards provisions of this contract shall not be subject to the general disputes clause of this contract. Such disputes shall be resolved in accordance with the procedures of the Department of Labor set forth in 29 CFR Parts 5, 6, and 7. Disputes within the meaning of this clause include disputes between the contractor (or any of its subcontractors) and HUD or its designee, the U.S. Department of Labor, or the employees or their representatives.

10. (i) Certification of Eligibility. By entering into this contract the contractor certifies that neither it (nor he or she) nor any person or firm who has an interest in the contractor's firm is a person or firm ineligible to be awarded Government contracts by virtue of Section 3(a) of the Davis-Bacon Act or 29 CFR 5.12(a)(1) or to be awarded HUD contracts or participate in HUD programs pursuant to 24 CFR Part 24.
(ii) No part of this contract shall be subcontracted to any person or firm ineligible for award of a Government contract by virtue of Section 3(a) of the Davis-Bacon Act or 29 CFR 5.12(a)(1) or to be awarded HUD contracts or participate in HUD programs pursuant to 24 CFR Part 24.
(iii) The penalty for making false statements is prescribed in the U.S. Criminal Code, 18 U.S.C. 1001. Additionally, U.S. Criminal Code, Section 1 01 0, Title 18, U.S.C., "Federal Housing Administration transactions", provides in part: "Whoever, for the purpose of . . . influencing in any way the action of such Administration..... makes, utters or publishes any statement knowing the same to be false..... shall be fined not more than $5,000 or imprisoned not more than two years, or both."

11. Complaints, Proceedings, or Testimony by Employees. No laborer or mechanic to whom the wage, salary, or other labor standards provisions of this Contract are applicable shall be discharged or in any other manner discriminated against by the Contractor or any subcontractor because such employee has filed any complaint or instituted or caused to be instituted any proceeding or has testified or is about to testify in any proceeding under or relating to the labor standards applicable under this Contract to his employer.

B. <u>Contract Work Hours and Safety Standards Act.</u> The provisions of this paragraph B are applicable where the amount of the prime contract exceeds $100,000. As used in this paragraph, the terms "laborers" and "mechanics" include watchmen and guards.

(1) Overtime requirements. No contractor or subcontractor contracting for any part of the contract work which may require or involve the employment of laborers or mechanics shall require or permit any such laborer or mechanic in any workweek in which the individual is employed on such work to work in excess of 40 hours in such workweek unless such laborer or mechanic receives compensation at a rate not less than one and one-half times the basic rate of pay for all hours worked in excess of 40 hours in such workweek.

(2) Violation; liability for unpaid wages; liquidated damages. In the event of any violation of the clause set forth in subparagraph (1) of this paragraph, the contractor and any subcontractor responsible therefore shall be liable for the unpaid wages. In addition, such contractor and subcontractor shall be liable to the United States (in the case of work done under contract for the District of Columbia or a territory, to such District or to such territory), for liquidated damages. Such liquidated damages shall be computed with respect to each individual laborer or mechanic, including watchmen and guards, employed in violation of the clause set forth in subparagraph (1) of this paragraph, in the sum of $10 for each calendar day on which such individual was required or permitted to work in excess of the standard workweek of 40 hours without payment of the overtime wages required by the clause set forth in sub paragraph (1) of this paragraph.
Previous editions are obsolete Page 5 of 5 form **HUD-4010** (06/2009) ref. Handbook 1344.1

(3) Withholding for unpaid wages and liquidated damages. HUD or its designee shall upon its own action or upon written request of an authorized representative of the Department of Labor withhold or cause to be withheld, from any moneys payable on account of work performed by the contractor or subcontractor under any such contract or any other Federal contract with the same prime contract, or any other Federally-assisted contract subject to the Contract Work Hours and Safety Standards Act which is held by the same prime contractor such sums as may be determined to be necessary to satisfy any liabilities of such contractor or subcontractor for unpaid wages and liquidated damages as provided in the clause set forth in subparagraph (2) of this paragraph.

(4) Subcontracts. The contractor or subcontractor shall insert in any subcontracts the clauses set forth in subparagraph (1) through (4) of this paragraph and also a clause requiring the subcontractors to include these clauses in any lower tier subcontracts. The prime contractor shall be responsible for compliance by any subcontractor or lower tier subcontractor with the clauses set forth in subparagraphs (1) through (4) of this paragraph.

C. <u>Health and Safety.</u> The provisions of this paragraph C are applicable where the amount of the prime contract exceeds $100,000.

(1) No laborer or mechanic shall be required to work in surroundings or under working conditions which are unsanitary, hazardous, or dangerous to his health and safety as determined under construction safety and health standards promulgated by the Secretary of Labor by regulation.

(2) The Contractor shall comply with all regulations issued by the Secretary of Labor pursuant to Title 29 Part 1926 and failure to comply may result in imposition of sanctions pursuant to the Contract Work Hours and Safety Standards Act, (Public Law 91-54, 83 Stat 96). 40 USC 3701 et seq.

(3) The contractor shall include the provisions of this paragraph in every subcontract so that such provisions will be binding on each subcontractor. The contractor shall take such action with respect to any subcontractor as the Secretary of Housing and Urban Development or the Secretary of Labor shall direct as a means of enforcing such provisions.

Section 11

Equal Opportunity Laws and Regulations

(A) In addition to Contract specifications set forth below, the Contractor shall conduct and administer this Contract in compliance with:

(1) Title VI of the Civil Rights Act of 1964 (Pub. L. 88-352) and implementing regulations issued at 24 CFR Part 1;
(2) Title VIII of the Civil Rights Act of 1968 (Pub. L. 90-284), as amended, and implementing regulations;
(3) Section 109 of the Housing and Community Development Act of 1974, as amended; and the regulations issued pursuant thereto (24 CFR Section 570.601);
(4) Section 3 of the Housing and Urban Development Act of 1968, as amended, and implementing regulations of 24 CFR Part 135;
(5) Executive Order 11246, as amended by Executive Order 11375 and 12086 and implementing regulations at 41 CFR Chapter 60;
(6) Executive Order 11063, as amended by Executive Order 12259 and implementing regulations at 24 CFR Part 107;
(7) Section 504 of the Rehabilitation Act of 1973 (Pub. L. 93-112), as amended, and implementing regulations when published for effect;
(8) The Age Discrimination Act of 1975, as amended, (Pub. L. 94-135) and implementing regulations when published for effect;
(9) The Minnesota Human Rights Act of 1974, as amended (Chapter 363).

Equal Opportunity and Affirmative Action

(A) Contractors and Subcontractors that have a work force in excess of fifty (50) employees and a contract in excess of $50,000.00 shall prepare and maintain an appropriate affirmative action plan in accordance with the provisions of 41 CFR 60 "Compliance Responsibility for Equal Opportunity".

(B) Non-segregated Facilities. The Contractor shall certify that he does not maintain or provide for his employees any segregated facilities at any of his establishments, and that he does not permit his employees to perform their services at any location, under his control, where segregated facilities are maintained. The Contractor covenants that he will not maintain or provide for his employees any segregated facilities at any of his establishments, and he will not permit his employees to perform their services at any location, under his control, where segregated facilities are maintained. As used in this paragraph the term "segregated facilities" means any waiting rooms, work areas, rest rooms and wash rooms, restaurants and other eating areas, time clocks, locker rooms and other storage or dressing areas, parking lots, drinking fountains, recreation or facilities provided for employees which are segregated by explicit directive or are in fact segregated on the basis of race, color, creed, religion, national origin, ancestry, age, marital status, status with respect to public assistance, and/or disability because of habit, local custom, or otherwise.

General Provisions Against Discrimination

(A) In all hiring or employment made possible by or resulting from this Contract, there:

(1) will not be any discrimination against any employee or applicant for employment because of race, color, creed, religion, national origin, ancestry, age, sex, marital status, status with respect to public assistance, and/or disability.

(2) affirmative action will be taken to ensure that applicants are employed, and that employees are treated during employment without regard to their race, color, creed, religion, national origin, ancestry, age, sex, marital status, status with respect to public assistance, and/or disability. This requirement shall apply to, but not be limited to, the following: employment, upgrading, demotion or transfer; recruitment or recruitment advertising; lay-off or termination; rates of pay or other forms of compensation; and selection for training, including apprenticeship. There shall be posted in conspicuous places available to employees and applicants for employment, notices setting forth the provisions of this clause. All solicitations or advertisements for employees shall state that all qualified applicants will receive consideration for employment without regard to race, color, creed, religion, national origin, ancestry, age, sex, marital status, status with respect to public assistance, and/or disability.

(B) No person in the United States shall, on the grounds of race, color, creed, religion, national origin, age, sex, marital status, status with respect to public assistance, and/or disability, be excluded from participation in, be denied the benefits of, or be subject to discrimination under any program or activity made possible by or resulting from this Contract. The Contractor and each employer will comply with all requirements imposed by or pursuant to the regulations of the Federal Agency effectuating Title VI of the Civil Rights Act of 1966. The Contractor will note this requirement in all solicitations or advertisements for employees. The Contractor agrees to post in conspicuous places, available to employees and applicants for employment, notices to be provided setting forth the provisions of this nondiscrimination clause.

(C) The Contractor will send to each labor union or representative of workers with which he has a collective bargaining agreement or other contract or understanding, a notice advising the labor union or workers' representative of the Contractor's commitments under these provisions, and shall post copies of the notice in conspicuous places available to employees and applicants for employment.

(D) The Contractor hereby agrees that he will incorporate into any contract for construction work, or modification thereof, as defined in the regulations of the Secretary of Labor at 41 CFR Chapter 60, which is paid for in whole or in part with funds obtained pursuant to this Contract, the equal opportunity clause which is a part of these Contract Documents.

(E) The Contractor further agrees that he will be bound by the equal opportunity clause and other provisions of 41 CFR Chapter 60, with respect to his own employment practices when he participates in federally assisted construction work: **Provided:** That of the Contractor so participating is a State or Local Government, the above equal opportunity clause is not applicable to any agency, instrumentality, or subdivision of such government which does not participate in work on or under the Contract. Also, the Contractor will make his files available to inspection by appropriate government agencies and shall furnish those reports as may be required by said agencies.

(F) The Contractor agrees that he will assist and cooperate actively with the Federal Agency and the Secretary of Labor in obtaining the compliance of subcontractors with the equal opportunity clause and the rules, regulations, and relevant orders of the Secretary of Labor, that he will furnish the Federal Agency and the Secretary of Labor such information as they may require for the supervision of such compliance, and that he will otherwise assist the Federal Agency in the discharge of its primary responsibility for securing compliance.

(G) The Contractor further agrees that he will refrain from entering into any contract or any contract modification subject to Executive Order 11246 of September 24, 1965, with a subcontractor debarred from, or who has not demonstrated eligibility for, Government contracts and federally assisted construction contracts pursuant to the Executive Order. In addition, the Contractor agrees that if he fails or refuses to comply with these undertakings, the City or the Federal Agency may take any or all of the following actions: Terminate or suspend in whole or in part this Contract; refrain from extending any further assistance to the Contractor under the Project with respect to which the failure or refusal occurred until satisfactory assurance of future compliance has been received from such Contractor and refer the case to the Department of Justice for appropriate legal proceedings.

Affirmative Action - "Construction Contracts" over $10,000

Notice of Requirement for Affirmative Action to Ensure Equal Employment Opportunity
(Executive Order 11246)

1. The Offeror's or Bidder's attention is called to the "Equal Opportunity Clause" and the "Standard Federal Equal Employment Opportunity Construction Contract Specifications" set forth herein.

2. The goals and timetables for minority and female participation, expressed in percentage terms for the Contractor's aggregate workforce in each trade on all construction work in the covered area, are as follows:

Timetables	Goals for minority participation (percent)	Goals for female participation (percent)
From April 1, 1980 until revised	3.0	6.9

These goals are applicable to all the Contractor's construction work (whether or not it is Federal or federally assisted) performed in the covered area.

The Contractor's compliance with the Executive Order and the regulations in 41 CFR Part 60-4 shall be based on its implementation of the Equal Opportunity Clause, specific affirmative action obligations required by the specifications set forth in 41 CFR 60-4.3 (a), and its efforts to meet the goals established for the geographical area where the contract resulting from this solicitation is to be performed. The hours of minority and female employment and training must be substantially uniform throughout the length of the contract, and in each trade, and the contractor shall make a good faith effort to employ minorities and women evenly on each of its projects. The transfer of minority or female employees or trainees from Contractor to Contractor or from project to project for the sole purpose of meeting the Contractor's goals shall be a violation of the contract, the Executive Order and the regulations in 41 CFR Part 60-4. Compliance with the goals will be measured against the total work hours performed.

3. The Contractor shall provide written notification to the City and to the Director of the Office of Federal Contract Compliance Programs; U.S. Department of Labor, ESA/OFCCP, 16th Floor, 230 South Dearborn Street, Chicago, Illinois, 60604, within 10 working days of award of any construction subcontract and/or subcontract in excess of $10,000 at any tier for construction work under the contract resulting from this solicitation. The notification shall list the name, address and telephone number of the contractor and/or subcontractor; employer identification number; estimated dollar amount of the prime contract; estimated dollar amount of the subcontract; estimated starting and completion dates of the subcontract; and the geographical area in which the contract is to be performed.

4. As used in this Notice, and in the Contract, the "covered area" is all work under a contract currently held with the City of Duluth, Minnesota.

Standard Federal Equal Employment Opportunity
Construction Contract Specifications (Executive Order 11246)

1. As used in these specifications:
   a) "Director" means Director, Office of Federal Contract Compliance Programs, United States Department of Labor; or any person to whom the Director delegates authority;
   b) "Employer identification number" means the Federal Social Security number used on the Employer's Quarterly Federal Tax Return, U.S. Treasury Department Form 941.
   c) "Minority" includes:
      (i) Black (all persons having origins in any of the Black African racial groups not of Hispanic origin);
      (ii) Hispanic (all persons of Mexican, Puerto Rican, Cuban, Central or South American or other Spanish Culture or origin, regardless of race);
      (iii) Asian and Pacific Islander (all persons having origins in any of the original peoples of the Far East, Southeast Asia, the Indian Subcontinent, or the Pacific Islands); and
      (iv) American Indian or Alaskan Native (all persons having origins in any of the original peoples of North America and maintaining identifiable tribal affiliations through membership and participation or community identification).

2. Whenever the Contractor, or any Subcontractor at any tier, subcontracts a portion of the work involving any construction trade, it shall physically include in each subcontract in excess of $10,000 the provisions of these specifications and the Notice which contains the applicable goals for minority and female participation and which is set forth in the solicitations from which this contract resulted.

3. If the Contractor is participating (pursuant to 41 CFR 60-4.5) in a Hometown Plan approved by the U.S. Department of Labor in the covered area either individually or through an association, its affirmative action obligations on all work in the Plan area (including goals and timetables) shall be in accordance with that Plan for those trades which have unions participating in the Plan. Contractors must be able to demonstrate their participation in and compliance with the provisions of any such Hometown Plan. Each Contractor or Subcontractor participating in an approved Plan is individually required to comply with its obligations under the EEO clause, and to make a good faith effort to achieve each goal under the Plan in each trade in which it has employees. The overall good faith performance by other Contractors or Subcontractors toward a goal in approved Plan does not excuse any covered Contractor's or Subcontractor's failure to take good faith efforts to achieve the Plan goals and timetables.

4. The Contractor shall implement the specific affirmative action standards provided in paragraphs 7a through p of these specifications. The goals set forth in the solicitation from which this contract resulted are expressed as percentages of the total hours of employment and training of minority and female utilization the Contractor should reasonably be able to achieve in each construction trade in which it has employees in the covered area. The Contractor is expected to make substantially uniform progress toward its goals in each craft during the period specified.

5. Neither the provisions of any collective bargaining agreement, nor the failure by a union with whom the Contractor has a collective bargaining agreement, to refer either minorities or women shall excuse the Contractor's obligations under these specifications, Executive Order 11246, or the regulations promulgated pursuant thereto.

6. In order for the non-working training hours of apprentices and trainees to be counted in meeting the goals, such apprentices and trainees must be employed by the Contractor during the training period, and the Contractor must have made a commitment to employ the apprentices and trainees at the completion of their training, subject to the availability of employment opportunities. Trainees must be trained pursuant to training programs approved by the U.S. Department of Labor.

7. The Contractor shall take specific affirmative action to ensure equal employment opportunity. The evaluation of the Contractor's compliance with these specifications shall be based upon its effort to achieve maximum results from its actions. The Contractor shall document these efforts fully, and shall implement affirmative action steps at least as extensive as the following:

a. Ensure and maintain a working environment free of harassment, intimidation, and coercion at all sites, and in all facilities at which the Contractor's employees are assigned to work. The Contractor, where possible, will assign two or more women to each construction project. The Contractor shall specifically ensure that all foremen, superintendents, and other on-site supervisory personnel are aware of and carry out the Contractor's obligation to maintain such a working environment, with specific attention to minority or female individuals working at such sites or in such facilities.

b. Establish and maintain a current list of minority and female recruitment sources, provide written notification to minority and female recruitment sources and to community organizations when the Contractor or its unions have employment opportunities available, and maintain a record of the organizations' responses.

c. Maintain a current file of the names, addresses and telephone numbers of each minority and female off-the-street applicant and minority or female referral from a union, a recruitment source or community organization and of what action was taken with respect to each such individual. If such individual was sent to the union hiring hall for referral and was not referred back to the Contractor by the union or, if referred, not employed by the Contractor, this shall be documented in the file with the reason therefore, along with whatever additional actions the Contractor may have taken.

d. Provide immediate written notification to the Director when the union or unions with which the Contractor has a collective bargaining agreement has not referred to the Contractor a minority person or woman sent by the Contractor, or when the Contractor has other information that the union referral process has impeded the Contractor's efforts to meet its obligations.

e. Develop on-the-job training opportunities and/or participate in training programs for the area which expressly include minorities and women, including upgrading programs and apprenticeship and trainee programs relevant to the Contractor's employment needs, especially those programs funded or approved by the Department of Labor. The Contractor shall provide notices of these programs to the sources compiled under 7b above.

f. Disseminate the Contractor's EEO policy by providing notice of the policy to unions and training programs and requesting their cooperation in assisting the Contractor in meeting its EEO obligations; by including it in any policy manual and collective bargaining agreement; by publicizing it in the company newspaper, annual report, etc.; by specific review of the policy with all management personnel and with all minority and female employees at least once a year; and by posting the company EEO policy on bulletin boards accessible to all employees at each location where construction work is performed.

g. Review, at least annually, the company's EEO policy and affirmative action obligations under these specifications with all employees having any responsibility for hiring, assignment, layoff, termination or other employment decisions including specific review of these items with onsite supervisory personnel such as Superintendents, General Foremen, etc., prior to the initiation of construction work at any job site. A written record shall be made and maintained identifying the time and place of these meetings, persons attending, subject matter discussed, and disposition of the subject matter.

h. Disseminate the Contractor's EEO policy externally by including it any advertising in the news media, specifically including minority and female news media, and providing written notification to and discussing the Contractor's EEO policy with other Contractors and Subcontractors with whom the Contractor does or anticipates doing business.

i. Direct its recruitment efforts, both oral and written, to minority, female and community organizations, to schools with minority and female students and to minority and female recruitments and training organizations serving the Contractor's recruitment area and employment needs. Not later than one month prior to the date for the acceptance of applications for apprenticeship or other training by any recruitment source, the Contractor shall send written notification to organizations such as the above, describing the openings, screening procedures, and tests to be used in the selection process.

j. Encourage present minority and female employees to recruit other minority persons and women and, where reasonable, provide after school, summer and vacation employment to minority and female youth both on the site and in other areas of a Contractor's work force.

k. Validate all tests and other selection requirements where there is an obligation to do so under 41 CFR Part 60-3.

l. Conduct, at least annually, an inventory and evaluation at least of all minority and female personnel for promotional opportunities and encourage these employees to seek or to prepare for, through appropriate training, etc., such opportunities.

m. Ensure that seniority practices, job classifications, work assignments and other personnel practices, do not have a discriminatory effect by continually monitoring all personnel and employment related activities to ensure that the EEO policy and the Contractor's obligations under these specifications are being carried out.

n. Ensure that all facilities and company activities are nonsegregated except that separate or single-user toilet and necessary changing facilities shall be provided to assure privacy between the sexes.

o. Document and maintain a record of all solicitations of officers for subcontracts from minority and female construction contractors and suppliers, including circulation of solicitations to minority and female contractor associations and other business associations.

p. Conduct a review, at least annually, of all supervisor's adherence to and performance under the Contractor's EEO policies and affirmative action obligations.

8. Contractors are encouraged to participate in voluntary associations which assist in fulfilling one or more of their affirmative action obligations (7a through p). The efforts of a contractor association, joint contractor-union, contractor-community, or other similar group of which the contractor is a member and participant, may be asserted as fulfilling any one or more of its obligations under 7a through p of these Specifications provided that the contractor actively participates in the group, makes every effort to assure that the group has a positive impact on the employment of minorities and women in the industry, ensures that the concrete benefits of the program are reflected in the Contractor's minority and female workforce participation, makes a good faith effort to meet its individual goals and timetables, and can provide access to documentation which demonstrates the effectiveness of actions taken on behalf of the Contractor. The obligation to comply, however, is the Contractor's and failure of such a group to fulfill an obligation shall not be a defense for the Contractor's noncompliance.

9. A single goal for minorities and a separate single goal for women have been established. The Contractor, however, is required to provide equal employment opportunity and to take affirmative action for all minority groups, both male and female, and all women, both minority and non-minority. Consequently, the Contractor may be in violation of the Executive Order if a particular group is employed in a substantially disparate manner (for example, even though the Contractor has achieved its goals for women generally, the Contractor may be violation of the Executive Order if a specific minority group of women is underutilized).

10. The Contractor shall not use the goals and timetables or affirmative action standards to discriminate against any person because of race, color, creed, religion, national origin, sex, ancestry, age, marital status, status with respect to public assistance and/or disability.

11. The Contractor shall not enter into any Subcontract with any person or firm debarred from Government contracts pursuant to Executive Order 11246.

12. The Contractor shall carry out such sanctions and penalties for violation of these specifications and of the Equal Opportunity Clause, including suspension, termination and cancellation of existing subcontracts as may be imposed or ordered pursuant to Executive Order 11246, as amended, and its implementing regulations, by the Office of Federal Contract Compliance Programs. Any Contractor who fails to carry out such sanctions and penalties shall be in violation of these specifications and Executive Order 11246, as amended.

13. The Contractor, in fulfilling its obligations under these specifications, shall implement specific affirmative action steps, at least as extensive as those standards prescribed in paragraph 7 of these specifications, so as to achieve maximum results from its efforts to ensure equal employment opportunity. If the Contractor fails

to comply with the requirements of the Executive Order, the implementing regulations, or these specifications, the Director shall proceed in accordance with 41 CFR 60-4.8.

14. The Contractor shall designate a responsible official to monitor all employment related activity to ensure that the company EEO policy is being carried out, to submit reports relating to the provisions hereof as may be required by the Government and to keep records. Records shall at least include for each employee the name, address, telephone numbers, construction trade, union affiliation if any, employee identification number when assigned, social security number, race, sex, status (e.g., mechanic, apprentice, trainee, helper, or laborer), dates of changes in status, hours worked per week in the indicated trade, rate of pay, and locations at which the work was performed. Records shall be maintained in an easily understandable and retrievable form; however, to the degree that existing records satisfy this requirement, contractors shall not be required to maintain separate records.

15. Nothing herein provided shall be construed as a limitation upon the application of other laws which establish different standards of compliance or upon the application of requirements for the hiring of local or other area residents (e.g., those under the Public Works Employment Act of 1977 and the Community Development Block Grant Program).

Affirmative Action for Handicapped Workers

(applies to contracts in excess of $2,500)

(A) The Contractor will not discriminate against any employee or applicant for employment because of physical or mental handicap in regard to any position for which the employee or applicant is qualified. The Contractor agrees to take affirmative action to employ, advance in employment and otherwise treat qualified handicapped individuals without discrimination based upon their physical or mental handicap in all employment practices such as the following: Employment, upgrading, demotion or transfer, recruitment, advertising, layoff or termination, rates of pay or other forms of compensation, and selection for training, including apprenticeship.

(B) The Contractor agrees to comply with the rules, regulations, and relevant orders of the Secretary of Labor issued pursuant to the Act.

(C) In the event of the Contractor's noncompliance with the requirements of this clause, actions for noncompliance may be taken in accordance with the rules, regulations and relevant orders of the Secretary of Labor issued pursuant to the Act.

(D) The Contractor agrees to post in conspicuous places, available to employees and applicants for employment, notices in a form to be prescribed by the Director, provided by or through the contracting officer. Such notices shall state the Contractor's obligation under the law to take affirmative action to employ and advance in employment qualified handicapped employees and applicants for employment, and the rights of applicants and employees.

(E) The Contractor will notify each labor union or representative of workers with which it has a collective bargaining agreement or other contract understanding, that the Contractor is bound by the terms of Section 503 of the Rehabilitation Act of 1973, and is committed to take affirmative action to employ and advance in employment physically and mentally handicapped individuals.

(F) The Contractor will include the provisions of this clause in every subcontract or purchase order of $2,500 or more unless exempted by rules, regulations, or orders of the Secretary issued pursuant to Section 503 of the Act, so that such provisions will be binding upon each subcontractor or vendor. The Contractor will take such action with respect to any subcontract or purchase order as the Director of the Office of Federal Contract Compliance Programs may direct to enforce such provisions, including action for noncompliance.

Affirmative Action for Disabled Veterans and Veterans of the Vietnam Era

(applies to contracts in excess of $10,000)

(A) The Contractor will not discriminate against any employee or applicant for employment because he or she is a disabled veteran or veteran of the Vietnam era in regard to any position for which the employee or applicant for employment is qualified. The Contractor agrees to take affirmative action to employ, advance in employment and otherwise treat qualified disabled veterans and veterans of the Vietnam era without discrimination based upon their disability or veterans status in all employment practices such as the following: Employment, upgrading, demotion or transfer, recruitment, advertising, layoff or termination, rates of pay or other forms of compensation, and selection for training, including apprenticeship.

(B) The Contractor agrees that all suitable employment openings of the Contractor which exist at the time of the execution of this contract and those which occur during the performance of this contract, including those not generated by this contract and including those occurring at an establishment of the Contractor other than the one wherein the contract is being performed but excluding those of independently operated corporate affiliates, shall be listed at an appropriate local office of the State employment service system wherein the opening occurs. The Contractor further agrees to provide such reports to such local office regarding employment openings and hires as may be required.
State and local government agencies holding Federal contracts of $10,000 or more shall also list all their suitable openings with the appropriate office of the State employment service, but are not required to provide those reports set forth in paragraphs (D) and (E).

(C) Listing of employment openings with the employment service system pursuant to this clause shall be made at least concurrently with the use of any other recruitment source or effort and shall involve the normal obligations which attach to the placing of a bona fide job order, including the acceptance of referrals of veterans and non-veterans. The listing of employment openings does not require the hiring of any particular job applicant or from any particular group of job applicants, and nothing herein is intended to relieve the Contractor from any requirements in Executive Orders of regulations regarding nondiscrimination in employment.

(D) The reports required by paragraph (B) of this clause shall include, but not be limited to, periodic reports which shall be filed at least quarterly with the appropriate local office or, where the Contractor has more than hiring location in a State, with the central office of that State employment service. Such reports shall indicate for each hiring location (1) the number of individuals hired during the reporting period, (2) the number of non-disabled veterans of the Vietnam era hired, (3) the number of disabled veterans of the Vietnam era hired, and (4) the total number of disabled veterans hired. The reports should include covered veterans hired for on-the-job training under 38 U.S.C. 1787. The Contractor shall maintain at each hiring location copies of the reports submitted until the expiration of one year after final payment under the contract, during which time these reports and related documentation shall be made available, upon request, for examination by any authorized representatives of the contracting officer of the Secretary of Labor. Documentation would include personnel records respecting job openings, recruitment and placement.

(E) Whenever the Contractor becomes contractually bound to the listing provisions of this clause, it shall advise the employment service system in each State where it has establishments of the name and location of each hiring location in the State. As long as the Contractor is contractually bound to these provisions, and has so

advised the State system, there is no need to advise the State system of subsequent contracts. The Contractor may advise the State system when it is no longer bound by this contract clause.

(F) This clause does not apply to the listing of employment openings which occur and are filled outside of the 50 States, the District of Columbia, Puerto Rico, Guam, and the Virgin Islands.

(G) The provisions of paragraphs (B), (C), (D), and (E) of this clause do not apply to openings which the Contractor proposes to fill from within his own organization or to fill pursuant to a customary and traditional employer-union hiring arrangement for that opening.

(H) As used in this clause:

(1) "All suitable employment openings" includes, but is not limited to, openings which occur in the following job categories: Production and non-production; plant and office; laborers and mechanics; supervisory and non-supervisory; technical; and executive, administrative, and professional openings as are compensated on a salary basis of less than $25,000 per year. This term includes full-time employment, temporary employment of more than 3 days' duration, and part-time employment. It does not include openings which the Contractor proposes to fill from within his own organization or to fill pursuant to a customary and traditional employer-union hiring arrangement nor openings in an educational institution which are restricted to students of that institution. Under the most compelling circumstances an employment opening may not be suitable for listing, including such situations where the needs of the Government cannot reasonably be otherwise supplied, where listing would be contrary to national security, or where the requirement of listing would otherwise not be for the best interest of the Government.

(2) "Appropriate office of the State employment service system" means the local office of the Federal-State national system of public employment offices with assigned responsibility for serving the area where the employment opening is to be filled, including the District of Columbia, Guam, Puerto Rico, and the Virgin Islands.

(3) "Openings which the Contractor proposes to fill from within his own organization" means employment openings for which no consideration will be given to persons outside the Contractor's organization (including any affiliates, subsidiaries, and the parent companies) and includes any openings which the Contractor proposes to fill from regularly established "recall" lists.

(4) "Openings which the Contractor proposes to fill pursuant to a customary and traditional employer-union hiring arrangement" means employment openings which the Contractor proposes to fill from union halls, which is part of the customary and traditional hiring relationship which exists between the Contractor and representatives of his employees.

(I) The Contractor agrees to comply with the rules, regulations, and relevant orders of the Secretary of Labor issued pursuant to the Act.

(J) In the event of the Contractor's noncompliance with the requirements of this clause, actions for noncompliance may be taken in accordance with the rules, regulations and relevant orders of the Secretary of Labor issued pursuant to the Act.

(K) The Contractor agrees to post in conspicuous places, available to employees and applicants for employment, notices in a form to be prescribed by the Director, provided by or through the contracting officer. Such notices shall state the Contractor's obligation under the law to take affirmative action to employ and advance in employment qualified disabled veterans and veterans of the Vietnam era for employment, and the rights of applicants and employees.

(L) The Contractor will notify each labor union representative of workers with which it has a collective bargaining agreement or other contract understanding, that the Contractor is bound by the terms of the Vietnam Era Veterans Readjustment Assistance Act, and is committed to take affirmative action to employ and advance qualified disabled veterans and veterans of the Vietnam era..

(M) The Contractor will include the provisions of this clause in every subcontract or purchase order of $10,000 or more unless exempted by rules, regulations, or orders of the Secretary issued pursuant to the Act, so that such provisions will be binding upon each subcontractor or vendor. The Contractor will take such action with respect to any subcontract or purchase order as the Director of the Office of Federal Contract Compliance Programs may direct to enforce such provisions, including action for noncompliance.

Section 12

Employment Opportunities - "HUD Section 3"

General

These requirements apply to the City of Duluth contracts receiving assistance under the U.S. Department of Housing and Urban Development (HUD) Community Development Block Grant (CDBG) Program.

Type of Covered Projects

24CFR570.607 (b) of the HUD CDBG Program Regulations state in part "... that employment and other economic opportunities arising in connection with housing rehabilitation, housing construction, or other public construction projects shall to the greatest extent feasible, and consistent with existing Federal, State, and local laws and regulations be given to low- and very low-income persons.

Thresholds

In accordance with the provisions of 24CFR135.3(a) (3) (ii) (A), the requirements of this Section apply to those recipients as defined at 24CFR135.5 when the amount of this contract exceeds $200,000.

In addition, in accordance with the provisions of 24CFR135.3 (a) (3) (ii) (B), the requirements of this Section apply to any contractor or subcontractor whose contract exceeds $100,000 as a result of assistance provided under this contract.

Requirements (Section 3 Clause)

(A) The work to be performed under this contract is subject to the requirements of Section 3 of the Housing and Urban Development Act of 1968, as amended, 12 U.S.C. 1701u (section 3). The purpose of Section 3 is to ensure that employment and other economic opportunities generated by HUD assistance or HUD-assisted projects covered by section 3, shall, to the greatest extent feasible, be directed to low- and very low-income persons, particularly persons who are recipients of HUD assistance for housing.

(B) The parties to this contract agree to comply with HUD's regulations in 24 CFR part 135, which implement section 3. As evidenced by their execution of this contract, the parties to this contract certify that they are under no contractual or other impediment that would prevent them from complying with the part 135 regulations.

(C) The contractor agrees to send to each labor organization or representative of workers with which the contractor has a collective bargaining agreement, or other understanding, if any, a notice advising the labor organization or workers' representative of the contractor's commitments under this section 3 clause, and will post copies of the notice in conspicuous places at the work site where both employees and applicants for training and employment positions can see the notice. The

notice shall describe the section 3 preference, shall set forth minimum number and job titles subject to hire, availability of apprenticeship and training positions, the qualifications for each; and the name and location of the person(s) taking applications for each of the positions; and the anticipated date the work shall begin.

(D) The Contractor agrees to include this section 3 clause in every subcontract subject to compliance with regulations in 24 CFR part 135, and agrees to take appropriate action, as provided in an applicable provision of the subcontract or in this section 3 clause, upon a finding that the subcontractor is in violation of the regulations in 24 CFR part 135. The contractor will not subcontract with any subcontractor where the contractor has notice or knowledge that the subcontractor has been found in violation of the regulations in 24 CFR part 135.

(E) The contractor will certify that any vacant employment positions, including training positions, that are filled (1) after the contractor is selected but before the contract is executed, and (2) with persons other than those to whom the regulations of 24 CFR part 135 require employment opportunities to be directed, were not filled to circumvent the contractor's obligation under 24 CFR part 135.

(F) Noncompliance with HUD's regulations in 24 CFR part 135 may result in sanctions, termination of this contract for default, and debarment or suspension from future HUD-assisted contracts.

Section 13

Federal Requirements for Minority/Women Business Enterprises Contract Guidance - MPFA

General

Municipalities that receive loan funding must comply with Federal requirements concerning utilization of Minority Business Enterprises (MBE) and Women's Business Enterprises (WBE). These requirements are designed to encourage the prime contractors to utilize MBEs and WBEs whenever procurement opportunities occur.

Regulation

40 C.F.R. Section 35.3145(d) Application of other Federal Authorities, M/WBE Requirements
Executive Orders No. 11625, 12138 and 12432 - Promoting the use of M/WBEs
Section 129 of Public Law 100-590 - Small Business Administration Reauthorization and Amendment Act of 1988
Regulations detailed in the EPA's *Cross-Cutting Federal Authorities - Clean Water Act State Revolving Fund Program and Safe Drinking Water Act State Revolving Fund Program*

Implementation

The "fair share" target percentage participation proposed for this project is 3.5 percent (3.5%) for MBE and 11.5 percent (11.5%) for WBE.

If the Contractor intends to let any subcontractors for a portion of the work, the Contractor shall take affirmative steps to assure that minority and women businesses are utilized when possible as sources of supplies, equipment, construction and services. Affirmative steps shall include the following:

a) Include qualified minority businesses on solicitation lists.
b) Assure that minority businesses are solicited whenever they are potential sources.
c) When economically feasible, divide total requirements into smaller tasks or quantities so as to permit maximum small and minority business participation.
d) Where the requirement permits, establish delivery schedules, which will encourage participation by minority businesses.
e) Use the services and assistance of the Office of Minority Business Enterprise of the Department of Commerce.

The low bidder will be required to submit to the City of Duluth documentation of his good faith efforts to meet the targeted goals of utilizing MBEs and WBEs.

Section 14 - Forms

Minnesota Department of Transportation and City of Duluth, Minnesota funded certified payroll forms

- MnDOT Prime Contractor's-Subcontractor's Statement of Compliance form (12/2010)
  www.dot.state.mn.us/const/labor/forms.html
- Certified Payroll Forms
  http://www.dol.gov/forms/whd/wh347.pdf
  use front side only

U. S. Department of Housing and Urban Development and federal government funded certified payroll forms

- Statement of Compliance Form & Certified Payroll Forms
  http://www.dol.gov/forms/whd/wh347.pdf
  (use reverse side for Statement of Compliance form)
- MnDOT Prime Contractor's-Subcontractor's Statement of Compliance form (12/2010)
  www.dot.state.mn.us/const/labor/forms.html

Minnesota Department of Transportation Trucking Requirements

- Month End Trucking Report Form A and Form B
- Month End Trucking Report Statement of Compliance
- Definitions, instructions, forms:
  www.dot.state.mn.us/const/labor/forms.html

CITY OF DULUTH

PAYMENT BOND

KNOW ALL MEN BY THESE PRESENTS: That we:

_____
(contractor's name)

(hereinafter called the "Contractor") located at: _____

_____
(contractor's address)

and _____
(surety's name)

(a corporation holding a certificate of the Insurance Commissioner of the State of Minnesota showing that it is authorized to contract as a surety, hereinafter called the "Surety") located at:

_____
(surety's address)

are held and firmly bound unto the City of Duluth (hereinafter called the "Owner"), for the benefit of persons furnishing labor and materials for the contract set forth below, in the penal sum of

_____

Dollars ($_____) for the payment of which we bind ourselves, our heirs, executors and administrators, successors and assigns, for the payment of all labor and materials supplied by any person in the performance of a written contract for the purpose of:

_____

_____

according to plans, profiles, and specifications thereto annexed. A copy of that contract is incorporated herein by reference and is made a part hereof as if fully copied herein.

NOW, THEREFORE, THE CONDITIONS OF THIS OBLIGATION ARE SUCH That,

A) If the Contractor shall make payments, as they may become due, to all persons supplying "labor and materials," as defined in Minnesota Statutes Section 574.26, used directly or indirectly by the Contractor, or his Subcontractor, in the prosecution of the work provided for in the contract,

B) If the Contractor shall indemnify the owner or other claimant for all costs that may accrue on account of the enforcing of the terms of the bond, if action is brought on the bond, including reasonable attorney's fees, in any case where such action is successfully maintained,

Then, this obligation shall be void; otherwise it shall remain in full force and effect.

And, the said Contractor and Surety agree that in accordance with Minnesota Statutes Section 574.26 not only said City, but any person furnishing “labor and materials,” as defined in Minnesota Statutes 574.26, may sue on this bond for their use on account of any sums due them for anything so furnished.

The Contractor and the Sureties do hereby expressly waive any objection that might be interposed as to the right of the Owner to require a bond containing the foregoing provisions, and they do hereby further expressly waive any defense which they or either and any of them might interpose to an action brought hereon by any person, firm, or corporation, including subcontractors, materialmen and third persons, for work, labor, services, supplies or material performed, rendered or furnished as aforesaid, upon the ground that there is no law authorizing the Owner to require the foregoing provisions to be placed in this bond.

And the Surety, for value received, hereby stipulates and agrees that the obligations of the Surety and this bond shall in no way be impaired or affected by any extension of time, modification, omission, addition or change in or to the contract or the work to be performed thereunder, or by any payment thereunder before the time required therein, or by any waiver of any provision thereof, or by any assignment, subletting or other transfer thereof, or of any part thereof, or of any work to be performed, or of any moneys due or to become due thereunder; and the said Surety does hereby waive notice of any and all such extensions, modifications, omissions, additions, changes, payments, waivers, assignments, subcontracts and transfers, and hereby stipulates and agrees that any and all things done and omitted to be done by and in relation to executors, administrators, successors, assignees, subcontractors and other transferees, shall have the same effect as to said Surety as though done or omitted to be done by and in relation to the Contractor.

Signed this _____ day of _____, 20___.

_____
Name of Principal

_____
By

_____
Name of Surety

By _____
Attorney-in-Fact

ACKNOWLEDGEMENTS

State of Minnesota)
) ss. Principal – Individual
County of St. Louis)

This instrument was acknowledged before me on _____
by _____.

Notary Seal _____
Notary Public

State of Minnesota)
) ss. Principal – Corporate or Partnership
County of St. Louis)

This instrument was acknowledged before me on _____
by _____ as _____
of _____.

Notary Seal _____
Notary Public

State of Minnesota)
) ss. Surety
County of St. Louis)

Be It Known, That on this _____ day of _____ A. D., 20___, came before me personally _____, to me personally known, who being by me duly sworn, did say that he/she is the _____ (title) of

_____

the above named corporation which executed the foregoing bond as surety; that the seal affixed to the foregoing instrument is the corporate seal of said corporation; that said instrument was executed in behalf of said corporation, by authority of its Board of Directors; that said corporation hold a certificate of the Insurance Commissioner of the State of Minnesota showing that it is authorized to contract as a surety; and said _____ acknowledged said instrument to be the free act and deed of said corporation.

Notary Seal _____
Notary Public

APPROVED AS TO FORM, CORRECTNESS AND VALIDTY HEREOF

Dated this _____ day of _____, 20 ___

_____

Assistant City Attorney Duluth MN

Dated this _____ day of _____, 20 ___

_____

Finance Director Duluth MN

CITY OF DULUTH

PERFORMANCE BOND

KNOW ALL MEN BY THESE PRESENTS: That we:

_____
(contractor's name)

(hereinafter called the "Contractor") located at:_____

_____
(contractor's address)

and _____
(surety's name)

(a corporation holding a certificate of the Insurance Commissioner of the State of Minnesota showing that it is authorized to contract as a surety, hereinafter called the "Surety") located at:

_____
(surety's address)

are held and firmly bound unto the City of Duluth (hereinafter called the "Owner"), in the penal sum of _____ Dollars ($_____) for the payment of which we bind ourselves, our heirs, executors and administrators, successors and assigns, for the faithful performance of a written contract for the purpose of:

_____

_____

_____

according to plans, profiles, and specifications thereto annexed. A copy of that contract is incorporated herein by reference and is made a part hereof as if fully copied herein.

NOW, THEREFORE, THE CONDITIONS OF THIS OBLIGATION ARE SUCH That,

A) If the Contractor shall in all respects comply with the terms and conditions of the Contract (which includes the contract documents) and such alterations as may be made in said contract as documents therein provide for, and shall complete the contract in accordance with its terms,

B) If the Contractor shall indemnify, defend and save harmless the owner from all costs, expenses, damages, injury or conduct, want or care or skill, negligence or default, including patent infringement on the part of the Contractor, agents or employees, in the

execution or performance of the contract,

C) If the Contractor shall indemnify the owner for all costs that may accrue on account of the enforcing of the terms of the bond, if action is brought on the bond, including reasonable attorney's fees, in any case where such action is successfully maintained,

D) If the Contractor shall comply with all laws pertaining to doing the work under the contract,

Then, this obligation shall be void; the Contractor and Surety jointly and severally agree to pay to the Owner any difference between the sum to which the Contractor will be entitled on the completion of the contract and that which the Owner may be obliged to pay for the completion of the work by contract or otherwise, and any damages, direct or indirect, or consequential, which the Owner may sustain on account of the work, or on account of the failure of the Contractor to properly and in all things, keep and execute all of the provisions of the Contract, provided however that Surety's liability to pay damages is limited to the amount of the Performance Bond as set forth above.

And, the said Contractor and Surety hereby further bind themselves, their successors, executors, administrators and assigns, jointly and severally, that they will employ and fully protect the said Owner against and will pay any and all amounts, damages, costs and judgements which may be recovered against or which the Owner may be called upon to pay to any person or corporation by reason of any damage arising from the performance of said work, repair or maintenance thereof, or the manner of doing the same, or the neglect of the said Contractor or his agents or servants, or the improper performance of the said work by the Contractor or his agents or servants, or the infringements of any patent rights by reason of the use of any material furnished or work done, as aforesaid, or otherwise. For the purpose of this paragraph, a subcontractor shall be deemed to be the agent or employee of the Contractor to the extent of his subcontract.

The Contractor and the Sureties do hereby expressly waive any objection that might be interposed as to the right of the Owner to require a bond containing the foregoing provisions, and they do hereby further expressly waive any defense which they or either and any of them might interpose to an action brought hereon by any person, firm, or corporation, including subcontractors, materialmen and third persons, for work, labor, services, supplies or material performed, rendered or furnished as aforesaid, upon the ground that there is no law authorizing the Owner to require the foregoing provisions to be placed in this bond.

And the Surety, for value received, hereby stipulates and agrees that the obligations of the Surety and this bond shall in no way be impaired or affected by any extension of time, modification, omission, addition or change in or to the contract or the work to be performed

thereunder, or by any payment thereunder before the time required therein, or by any waiver of any provision thereof, or by any assignment, subletting or other transfer thereof, or of any part thereof, or of any work to be performed, or of any moneys due or to become due thereunder; and the said Surety does hereby waive notice of any and all such extensions, modifications, omissions, additions, changes, payments, waivers, assignments, subcontracts and transfers, and hereby stipulates and agrees that any and all things done and omitted to be done by and in relation to executors, administrators, successors, assignees, subcontractors and other transferees, shall have the same effect as to said Surety as though done or omitted to be done by and in relation to the Contractor.

Signed this _____ day of _____, 20___.

_____
Name of Principal

_____
By

_____
Name of Surety

By _____
Attorney-in-Fact

ACKNOWLEDGEMENTS

State of Minnesota)
) ss. Principal – Individual
County of St. Louis)

This instrument was acknowledged before me on _____
by _____.

Notary Seal

_____
Notary Public

State of Minnesota)
) ss. Principal – Corporate or Partnership
County of St. Louis)

This instrument was acknowledged before me on _____
by _____ as _____
of _____.

Notary Seal

_____
Notary Public

State of Minnesota)
) ss. Surety
County of St. Louis)

Be It Known, That on this _____ day of _____ A. D., 20___, came before me personally _____, to me personally known, who being by me duly sworn, did say that he/she is the _____(title) of _____ the above named corporation which executed the foregoing bond as surety; that the seal affixed to the foregoing instrument is the corporate seal of said corporation; that said instrument was executed in behalf of said corporation, by authority of its Board of Directors; that said corporation hold a certificate of the Insurance Commissioner of the State of Minnesota showing that it is authorized to contract as a surety; and said _____ acknowledged said instrument to be the free act and deed of said corporation.

Notary Seal

_____
Notary Public

APPROVED AS TO FORM, CORRECTNESS AND VALIDTY HEREOF

Dated this _____ day of _____, 20 ___

_____

Assistant City Attorney Duluth MN

Dated this _____ day of _____, 20 ___

_____

Finance Director Duluth MN

General Decision Number: MN170105 07/21/2017 MN105

Superseded General Decision Number: MN20160105

State: Minnesota

Construction Type: Heavy

County: St Louis County in Minnesota.

HEAVY CONSTRUCTION PROJECTS

Note: Under Executive Order (EO) 13658, an hourly minimum wage of $10.20 for calendar year 2017 applies to all contracts subject to the Davis-Bacon Act for which the contract is awarded (and any solicitation was issued) on or after January 1, 2015. If this contract is covered by the EO, the contractor must pay all workers in any classification listed on this wage determination at least $10.20 (or the applicable wage rate listed on this wage determination, if it is higher) for all hours spent performing on the contract in calendar year 2017. The EO minimum wage rate will be adjusted annually. Additional information on contractor requirements and worker protections under the EO is available at www.dol.gov/whd/govcontracts.

Modification Number	Publication Date
0	01/06/2017
1	02/03/2017
2	03/03/2017
3	04/14/2017
4	05/19/2017
5	06/23/2017
6	07/14/2017
7	07/21/2017

BOIL0647-004 01/01/2017

	Rates	Fringes
BOILERMAKER	$ 35.65	29.89

CARP0361-020 05/01/2016

ST LOUIS COUNTY (Southern 1/3 including Cotton, Floodwood, Fond Du Lac, and Proctor)

	Rates	Fringes
CARPENTER (Including Form Work)	$ 34.57	18.16

CARP0361-021 05/01/2016

ST LOUIS (Duluth)

	Rates	Fringes
CARPENTER (Including Form Work)	$ 34.57	18.16

CARP0606-010 05/01/2015

ST LOUIS COUNTY (Northeast 2/3 including Cook, Cusson, Ely; and Western part including Chisholm, Greaney, and Orr)

	Rates	Fringes
CARPENTER (Including Form Work)	$ 34.11	17.08

ELEC0242-012 06/04/2017

ST. LOUIS (South part bounded on the north by the north line of Kelsey Township extended east & west)

	Rates	Fringes
ELECTRICIAN	$ 35.90	25.64

ELEC0294-006 05/29/2016

ST. LOUIS (North part bounded on the south by the south line of Ellsburg Township, extended east & west)

	Rates	Fringes
ELECTRICIAN	$ 35.60	71.72%

---

* ENGI0049-064 05/01/2017

	Rates	Fringes
OPERATOR: Power Equipment		
Group 2	$ 35.54	19.70
Group 3	$ 34.99	19.70
Group 4	$ 34.69	19.70
Group 5	$ 31.65	19.70
Group 6	$ 30.44	19.70

POWER EQUIPMENT OPERATOR CLASSIFICATIONS

GROUP 2: Crane with over 135' Boom, excluding jib; Dragline & Hydraulic Backhoe with shovel-type controls, 3 cubic yards and over; Grader/Blade finishing earthwork and bituminous.

GROUP 3: Dragline & Hydraulic Backhoe with shovel-type controls up to 3 cubic yards; Loader 5 cu yd and over; Mechanic; Tandem Scraper; Truck Crane; Crawler Crane

GROUP 4: Bituminous Roller 8 tons & over; Crusher/Crushing Plant; Drill Rig; Elevating Grader; Loader over 1 cu yd; Grader; Pump; Scraper up; to 32 cu yd; Farm Tractor with Backhoe attachment; Skid Steer Loader over 1 cu yd with Backhoe attachment; Bulldozer over 50 hp.

GROUP 5: Bituminous Roller under 8 tons; Bituminous Rubber Tire Roller; Loader up to 1 cu yd; Bulldozer 50 hp or less.

GROUP 6: Oiler; Self-Propelled Vibrating Packer 35 hp and over.

CRANE OVER 135' BOOM, EXCLUDING JIB - $ .25 PREMIUM;
CRANE OVER 200' BOOM, EXCLUDING JIB - $ .50 PREMIUM

UNDERGROUND WORK:
UNNELS, SHAFTS, ETC. - $ .25 PREMIUM
UNDER AIR PRESSURE - $ .50 PREMIUM

HAZARDOUS WASTE PROJECTS (PPE Required):
LEVEL A - $1.25 PREMIUM
LEVEL B - $ .90 PREMIUM
LEVEL C - $ .60 PREMIUM

IRON0512-028 06/05/2016

	Rates	Fringes
IRONWORKER, STRUCTURAL AND REINFORCING	$ 31.54	24.90

LABO1091-006 05/01/2016

ST LOUIS (South of T. 55 N)

	Rates	Fringes
LABORERS		
(1) Common or General	$ 29.13	17.12
(2) Mason Tender Cement/Concrete	$ 29.33	17.12
(6) Pipe Layer	$ 31.63	17.12

LABO1091-007 05/01/2016

SOUTHERN ST. LOUIS COUNTY

	Rates	Fringes
LABORER		
Common or General (Natural Gas Pipeline only)	$ 29.13	17.12

LABO1097-002 05/01/2014

NORTHERN ST. LOUIS COUNTY

	Rates	Fringes
LABORER		
Common or General (Natural Gas Pipeline only)	$ 25.02	18.16

LABO1097-005 05/01/2014

ST LOUIS (North of T. 55 N)

	Rates	Fringes
LABORERS		
(1) Common or General	$ 25.02	18.16
(2) Mason Tender Cement/Concrete	$ 25.22	18.16
(6) Pipe Layer	$ 27.52	18.16

PLAS0633-036 05/01/2017

ST. LOUIS COUNTY (North of T 55N)

	Rates	Fringes
CEMENT MASON/CONCRETE FINISHER	$ 33.95	18.13

PLAS0633-039 05/01/2017

ST. LOUIS COUNTY (South of T 55N)

	Rates	Fringes
CEMENT MASON/CONCRETE FINISHER	$ 33.95	18.13

TEAM0160-018 05/01/2017

	Rates	Fringes
TRUCK DRIVER (DUMP)		
(1) Articulated Dump Truck	$ 30.25	16.60
(2) 3 Axles/4 Axles; 5 Axles receive $0.30 additional per hour	$ 29.70	16.60
(3) Tandem Axles; & Single Axles	$ 29.60	16.60

SUMN2009-072 09/28/2009

	Rates	Fringes
LABORER: Landscape	$ 12.88	4.61

WELDERS - Receive rate prescribed for craft performing operation to which welding is incidental.

==========

Note: Executive Order (EO) 13706, Establishing Paid Sick Leave for Federal Contractors applies to all contracts subject to the Davis-Bacon Act for which the contract is awarded (and any solicitation was issued) on or after January 1, 2017. If this contract is covered by the EO, the contractor must provide employees with 1 hour of paid sick leave for every 30 hours they work, up to 56 hours of paid sick leave each year. Employees must be permitted to use paid sick leave for their own illness, injury or other health-related needs, including preventive care; to assist a family member (or person who is like family to the employee) who is ill, injured, or has other health-related needs, including preventive care; or for reasons resulting from, or to assist a family member (or person who is like family to the employee) who is a victim of, domestic violence, sexual assault, or stalking. Additional information on contractor requirements and worker protections under the EO is available at www.dol.gov/whd/govcontracts.

Unlisted classifications needed for work not included within the scope of the classifications listed may be added after award only as provided in the labor standards contract clauses (29CFR 5.5 (a) (1) (ii)).

The body of each wage determination lists the classification and wage rates that have been found to be prevailing for the cited type(s) of construction in the area covered by the wage determination. The classifications are listed in alphabetical order of "identifiers" that indicate whether the particular rate is a union rate (current union negotiated rate for local), a survey rate (weighted average rate) or a union average rate (weighted union average rate).

Union Rate Identifiers

A four letter classification abbreviation identifier enclosed in dotted lines beginning with characters other than "SU" or "UAVG" denotes that the union classification and rate were prevailing for that classification in the survey. Example: PLUM0198-005 07/01/2014. PLUM is an abbreviation identifier of the union which prevailed in the survey for this classification, which in this example would be Plumbers. 0198 indicates the local union number or district council number where applicable, i.e., Plumbers Local 0198. The next number, 005 in the example, is an internal number used in processing the wage determination. 07/01/2014 is the effective date of the most current negotiated rate, which in this example is July 1, 2014.

Union prevailing wage rates are updated to reflect all rate changes in the collective bargaining agreement (CBA) governing

this classification and rate.

Survey Rate Identifiers

Classifications listed under the "SU" identifier indicate that no one rate prevailed for this classification in the survey and the published rate is derived by computing a weighted average rate based on all the rates reported in the survey for that classification. As this weighted average rate includes all rates reported in the survey, it may include both union and non-union rates. Example: SULA2012-007 5/13/2014. SU indicates the rates are survey rates based on a weighted average calculation of rates and are not majority rates. LA indicates the State of Louisiana. 2012 is the year of survey on which these classifications and rates are based. The next number, 007 in the example, is an internal number used in producing the wage determination. 5/13/2014 indicates the survey completion date for the classifications and rates under that identifier.

Survey wage rates are not updated and remain in effect until a new survey is conducted.

Union Average Rate Identifiers

Classification(s) listed under the UAVG identifier indicate that no single majority rate prevailed for those classifications; however, 100% of the data reported for the classifications was union data. EXAMPLE: UAVG-OH-0010 08/29/2014. UAVG indicates that the rate is a weighted union average rate. OH indicates the state. The next number, 0010 in the example, is an internal number used in producing the wage determination. 08/29/2014 indicates the survey completion date for the classifications and rates under that identifier.

A UAVG rate will be updated once a year, usually in January of each year, to reflect a weighted average of the current negotiated/CBA rate of the union locals from which the rate is based.

WAGE DETERMINATION APPEALS PROCESS

1.) Has there been an initial decision in the matter? This can be:

* an existing published wage determination
* a survey underlying a wage determination
* a Wage and Hour Division letter setting forth a position on a wage determination matter
* a conformance (additional classification and rate) ruling

On survey related matters, initial contact, including requests for summaries of surveys, should be with the Wage and Hour Regional Office for the area in which the survey was conducted

because those Regional Offices have responsibility for the Davis-Bacon survey program. If the response from this initial contact is not satisfactory, then the process described in 2.) and 3.) should be followed.

With regard to any other matter not yet ripe for the formal process described here, initial contact should be with the Branch of Construction Wage Determinations. Write to:

Branch of Construction Wage Determinations
Wage and Hour Division
U.S. Department of Labor
200 Constitution Avenue, N.W.
Washington, DC 20210

2.) If the answer to the question in 1.) is yes, then an interested party (those affected by the action) can request review and reconsideration from the Wage and Hour Administrator (See 29 CFR Part 1.8 and 29 CFR Part 7). Write to:

Wage and Hour Administrator
U.S. Department of Labor
200 Constitution Avenue, N.W.
Washington, DC 20210

The request should be accompanied by a full statement of the interested party's position and by any information (wage payment data, project description, area practice material, etc.) that the requestor considers relevant to the issue.

3.) If the decision of the Administrator is not favorable, an interested party may appeal directly to the Administrative Review Board (formerly the Wage Appeals Board). Write to:

Administrative Review Board
U.S. Department of Labor
200 Constitution Avenue, N.W.
Washington, DC 20210

4.) All decisions by the Administrative Review Board are final.

==========

END OF GENERAL DECISION

MINNESOTA DEPARTMENT OF LABOR AND INDUSTRY PREVAILING WAGES FOR STATE FUNDED CONSTRUCTION PROJECTS

THIS NOTICE MUST BE POSTED ON THE JOBSITE IN A CONSPICUOUS PLACE

Construction Type: Highway and Heavy

Region Number: 01

Counties within region:

- CARLTON-09
- COOK-16
- ITASCA-31
- KOOCHICHING-36
- LAKE-38
- PINE-58
- ST. LOUIS-69

Effective: 2016-11-07 Revised: 2017-01-17

This project is covered by Minnesota prevailing wage statutes. Wage rates listed below are the minimum hourly rates to be paid on this project.

All hours worked in excess of eight (8) hours per day or forty (40) hours per week shall be paid at a rate of one and one half (1 1/2) times the basic hourly rate.

Violations should be reported to:

Department of Transportation
Office of Construction
Transportation Building MS650
John Ireland Blvd
St. Paul, MN 55155
(651) 366-4209

Refer questions concerning the prevailing wage rates to:

Department of Labor and Industry
Prevailing Wage Section
443 Lafayette Road N
St Paul, MN 55155
(651) 284-5091
DLI.PrevWage@state.mn.us

LABOR CODE AND CLASS

		EFFECT DATE	BASIC RATE	FRINGE RATE	TOTAL RATE
LABORERS (101 - 112) (SPECIAL CRAFTS 701 - 730)					
101	LABORER, COMMON (GENERAL LABOR WORK)	2016-11-07	29.23	17.02	46.25
102	LABORER, SKILLED (ASSISTING SKILLED CRAFT JOURNEYMAN)	2016-11-07	29.23	17.02	46.25
103	LABORER, LANDSCAPING (GARDENER, SOD LAYER AND NURSERY OPERATOR)	2016-11-07	21.17	13.99	35.16
104	FLAG PERSON	2016-11-07	29.23	17.02	46.25
105	WATCH PERSON	2016-11-07	25.68	16.77	42.45
106	BLASTER	2016-11-07	32.23	17.02	49.25
107	PIPELAYER (WATER, SEWER AND GAS)	2016-11-07	31.73	17.02	48.75
108	TUNNEL MINER	2016-11-07	29.93	17.02	46.95
109	UNDERGROUND AND OPEN DITCH LABORER (EIGHT FEET BELOW STARTING GRADE LEVEL)	2016-11-07	29.93	17.02	46.95
110	SURVEY FIELD TECHNICIAN (OPERATE TOTAL STATION, GPS RECEIVER, LEVEL, ROD OR RANGE POLES, STEEL TAPE MEASUREMENT; MARK AND DRIVE STAKES; HAND OR POWER DIGGING FOR AND IDENTIFICATION OF MARKERS OR MONUMENTS; PERFORM AND CHECK CALCULATIONS; REVIEW AND UNDERSTAND CONSTRUCTION PLANS AND LAND SURVEY MATERIALS). THIS CLASSIFICATION DOES NOT APPLY TO THE WORK PERFORMED ON A PREVAILING WAGE PROJECT BY A LAND SURVEYOR WHO IS LICENSED PURSUANT TO MINNESOTA STATUTES, SECTIONS 326.02 TO 326.15.	2016-11-07	29.23	17.02	46.25
111	TRAFFIC CONTROL PERSON (TEMPORARY SIGNAGE)	2016-11-07	29.23	17.02	46.25

112	QUALITY CONTROL TESTER (FIELD AND COVERED OFF-SITE FACILITIES; TESTING OF AGGREGATE, ASPHALT, AND CONCRETE MATERIALS); LIMITED TO MN DOT HIGHWAY AND HEAVY CONSTRUCTION PROJECTS WHERE THE MN DOT HAS RETAINED QUALITY ASSURANCE PROFESSIONALS TO REVIEW AND INTERPRET THE RESULTS OF QUALITY CONTROL TESTERS. SERVICES PROVIDED BY THE CONTRACTOR.	2016-11-07	22.15	12.76	34.91

SPECIAL EQUIPMENT (201 - 204)

201	ARTICULATED HAULER	2016-11-07	33.54	18.90	52.44
		2017-05-01	33.74	19.70	53.44
202	BOOM TRUCK	2016-11-07	33.54	18.90	52.44
		2017-05-01	33.74	19.70	53.44
203	LANDSCAPING EQUIPMENT, INCLUDES HYDRO SEEDER OR MULCHER, SOD ROLLER, FARM TRACTOR WITH ATTACHMENT SPECIFICALLY SEEDING, SODDING, OR PLANT, AND TWO-FRAMED FORKLIFT (EXCLUDING FRONT, POSIT-TRACK, AND SKID STEER LOADERS), NO EARTHWORK OR GRADING FOR ELEVATIONS	2016-11-07	29.29	18.90	48.19
		2017-05-01	29.49	19.70	49.19
204	OFF-ROAD TRUCK	2016-11-07	31.37	16.70	48.07
205	PAVEMENT MARKING OR MARKING REMOVAL EQUIPMENT (ONE OR TWO PERSON OPERATORS); SELF-PROPELLED TRUCK OR TRAILER MOUNTED UNITS.	2016-11-07	28.36	19.32	47.68

HIGHWAY/HEAVY POWER EQUIPMENT OPERATOR

GROUP 2	2016-11-07	34.39	18.90	53.29
	2017-05-01	34.59	19.70	54.29

302 HELICOPTER PILOT (HIGHWAY AND HEAVY ONLY)

303 CONCRETE PUMP (HIGHWAY AND HEAVY ONLY)

304 ALL CRANES WITH OVER 135-FOOT BOOM, EXCLUDING JIB (HIGHWAY AND HEAVY ONLY)

305 DRAGLINE, CRAWLER, HYDRAULIC BACKHOE (TRACK OR WHEEL MOUNTED) AND/OR OTHER SIMILAR EQUIPMENT WITH SHOVEL-TYPE CONTROLS THREE CUBIC YARDS AND OVER MANUFACTURER.S RATED CAPACITY INCLUDING ALL ATTACHMENTS. (HIGHWAY AND HEAVY ONLY)

306 GRADER OR MOTOR PATROL

307 PILE DRIVING (HIGHWAY AND HEAVY ONLY)

308 TUGBOAT 100 H.P. AND OVER WHEN LICENSE REQUIRED (HIGHWAY AND HEAVY ONLY)

GROUP 3	2016-11-07	33.84	18.90	52.74
	2017-05-01	34.04	19.70	53.74

309 ASPHALT BITUMINOUS STABILIZER PLANT

310 CABLEWAY

311 CONCRETE MIXER, STATIONARY PLANT (HIGHWAY AND HEAVY ONLY)

312 DERRICK (GUY OR STIFFLEG)(POWER)(SKIDS OR STATIONARY) (HIGHWAY AND HEAVY ONLY)

313 DRAGLINE, CRAWLER, HYDRAULIC BACKHOE (TRACK OR WHEEL MOUNTED) AND/OR SIMILAR EQUIPMENT WITH SHOVEL-TYPE CONTROLS, UP TO THREE CUBIC YARDS MANUFACTURER.S RATED CAPACITY INCLUDING ALL ATTACHMENTS (HIGHWAY AND HEAVY ONLY)

314 DREDGE OR ENGINEERS, DREDGE (POWER) AND ENGINEER

315 FRONT END LOADER, FIVE CUBIC YARDS AND OVER INCLUDING ATTACHMENTS. (HIGHWAY AND HEAVY ONLY)

316 LOCOMOTIVE CRANE OPERATOR

317 MIXER (PAVING) CONCRETE PAVING, ROAD MOLE, INCLUDING MUCKING OPERATIONS, CONWAY OR SIMILAR TYPE

318 MECHANIC . WELDER ON POWER EQUIPMENT (HIGHWAY AND HEAVY ONLY)

319 TRACTOR . BOOM TYPE (HIGHWAY AND HEAVY ONLY)

320 TANDEM SCRAPER

321 TRUCK CRANE . CRAWLER CRANE (HIGHWAY AND HEAVY ONLY)

322 TUGBOAT 100 H.P AND OVER (HIGHWAY AND HEAVY ONLY)

GROUP 4	2016-11-07	33.54	18.90	52.44
	2017-05-01	33.74	19.70	53.44

323 AIR TRACK ROCK DRILL

324 AUTOMATIC ROAD MACHINE (CMI OR SIMILAR) (HIGHWAY AND HEAVY ONLY)

325 BACKFILLER OPERATOR

326 CONCRETE BATCH PLANT OPERATOR (HIGHWAY AND HEAVY ONLY)

327 BITUMINOUS ROLLERS, RUBBER TIRED OR STEEL DRUMMED (EIGHT TONS AND OVER)

328 BITUMINOUS SPREADER AND FINISHING MACHINES (POWER), INCLUDING PAVERS, MACRO SURFACING AND MICRO SURFACING, OR SIMILAR TYPES (OPERATOR AND SCREED PERSON)

329 BROKK OR R.T.C. REMOTE CONTROL OR SIMILAR TYPE WITH ALL ATTACHMENTS

330 CAT CHALLENGER TRACTORS OR SIMILAR TYPES PULLING ROCK WAGONS, BULLDOZERS AND SCRAPERS

331 CHIP HARVESTER AND TREE CUTTER

332 CONCRETE DISTRIBUTOR AND SPREADER FINISHING MACHINE, LONGITUDINAL FLOAT, JOINT MACHINE, AND SPRAY MACHINE

333 CONCRETE MIXER ON JOBSITE (HIGHWAY AND HEAVY ONLY)

334 CONCRETE MOBIL (HIGHWAY AND HEAVY ONLY)

335 CRUSHING PLANT (GRAVEL AND STONE) OR GRAVEL WASHING, CRUSHING AND SCREENING PLANT

336 CURB MACHINE

337 DIRECTIONAL BORING MACHINE

338 DOPE MACHINE (PIPELINE)

339 DRILL RIGS, HEAVY ROTARY OR CHURN OR CABLE DRILL (HIGHWAY AND HEAVY ONLY)

340 DUAL TRACTOR

341 ELEVATING GRADER

342 FORK LIFT OR STRADDLE CARRIER (HIGHWAY AND HEAVY ONLY)

343 FORK LIFT OR LUMBER STACKER (HIGHWAY AND HEAVY ONLY)

344 FRONT END, SKID STEER OVER 1 TO 5 C YD

345 GPS REMOTE OPERATING OF EQUIPMENT

346 HOIST ENGINEER (POWER) (HIGHWAY AND HEAVY ONLY)

347 HYDRAULIC TREE PLANTER

348 LAUNCHER PERSON (TANKER PERSON OR PILOT LICENSE)

349 LOCOMOTIVE (HIGHWAY AND HEAVY ONLY)

350 MILLING, GRINDING, PLANNING, FINE GRADE, OR TRIMMER MACHINE

351 MULTIPLE MACHINES, SUCH AS AIR COMPRESSORS, WELDING MACHINES, GENERATORS, PUMPS (HIGHWAY AND HEAVY ONLY)

352 PAVEMENT BREAKER OR TAMPING MACHINE (POWER DRIVEN) MIGHTY MITE OR SIMILAR TYPE

353 PICKUP SWEEPER, ONE CUBIC YARD AND OVER HOPPER CAPACITY(HIGHWAY AND HEAVY ONLY)

354 PIPELINE WRAPPING, CLEANING OR BENDING MACHINE

355 POWER PLANT ENGINEER, 100 KWH AND OVER (HIGHWAY AND HEAVY ONLY)

356 POWER ACTUATED HORIZONTAL BORING MACHINE, OVER SIX INCHES

357 PUGMILL

358 PUMPCRETE (HIGHWAY AND HEAVY ONLY)

359 RUBBER-TIRED FARM TRACTOR WITH BACKHOE INCLUDING ATTACHMENTS (HIGHWAY AND HEAVY ONLY)

360 SCRAPER

361 SELF-PROPELLED SOIL STABILIZER

362 SLIP FORM (POWER DRIVEN) (PAVING)

363 TIE TAMPER AND BALLAST MACHINE

364 TRACTOR, BULLDOZER (HIGHWAY AND HEAVY ONLY)

365 TRACTOR, WHEEL TYPE, OVER 50 H.P. WITH PTO UNRELATED TO LANDSCAPING (HIGHWAY AND HEAVY ONLY)

366 TRENCHING MACHINE (SEWER, WATER, GAS) EXCLUDES WALK BEHIND TRENCHER (HIGHWAY AND HEAVY ONLY)

367 TUB GRINDER, MORBARK, OR SIMILAR TYPE

368 WELL POINT DISMANTLING OR INSTALLATION (HIGHWAY AND HEAVY ONLY)

GROUP 5	2016-11-07	30.50	18.90	49.40
	2016-11-07	30.50	18.90	49.40
	2017-05-01	30.70	19.70	50.40

369 AIR COMPRESSOR, 600 CFM OR OVER (HIGHWAY AND HEAVY ONLY)

370 BITUMINOUS ROLLER (UNDER EIGHT TONS)

371 CONCRETE SAW (MULTIPLE BLADE) (POWER OPERATED)

372 FORM TRENCH DIGGER (POWER)

373 FRONT END, SKID STEER UP TO 1C YD

374 GUNITE GUNALL (HIGHWAY AND HEAVY ONLY)

375 HYDRAULIC LOG SPLITTER

376 LOADER (BARBER GREENE OR SIMILAR TYPE)

377 POST HOLE DRIVING MACHINE/POST HOLE AUGER

378 POWER ACTUATED AUGER AND BORING MACHINE

379 POWER ACTUATED JACK

380 PUMP (HIGHWAY AND HEAVY ONLY)

381 SELF-PROPELLED CHIP SPREADER (FLAHERTY OR SIMILAR)

382 SHEEP FOOT COMPACTOR WITH BLADE . 200 H.P. AND OVER

383 SHOULDERING MACHINE (POWER) APSCO OR SIMILAR TYPE INCLUDING SELF-PROPELLED SAND AND CHIP SPREADER

384 STUMP CHIPPER AND TREE CHIPPER

385 TREE FARMER (MACHINE)

GROUP 6	2016-11-07	29.29	18.90	48.19
	2017-05-01	29.49	19.70	49.19

387 CAT, CHALLENGER, OR SIMILAR TYPE OF TRACTORS, WHEN PULLING DISK OR ROLLER

388 CONVEYOR (HIGHWAY AND HEAVY ONLY)

389 DREDGE DECK HAND

390 FIRE PERSON OR TANK CAR HEATER (HIGHWAY AND HEAVY ONLY)

391 GRAVEL SCREENING PLANT (PORTABLE NOT CRUSHING OR WASHING)

392 GREASER (TRACTOR) (HIGHWAY AND HEAVY ONLY)

393 LEVER PERSON

394 OILER (POWER SHOVEL, CRANE, TRUCK CRANE, DRAGLINE, CRUSHERS, AND MILLING MACHINES, OR OTHER SIMILAR HEAVY EQUIPMENT) (HIGHWAY AND HEAVY ONLY)

395 POWER SWEEPER

396 SHEEP FOOT ROLLER AND ROLLERS ON GRAVEL COMPACTION, INCLUDING VIBRATING ROLLERS

397 TRACTOR, WHEEL TYPE, OVER 50 H.P., UNRELATED TO LANDSCAPING

TRUCK DRIVERS

GROUP 1	2016-11-07	29.70	15.65	45.35
	2017-05-01	30.25	16.60	46.85

601 MECHANIC . WELDER

602 TRACTOR TRAILER DRIVER

603 TRUCK DRIVER (HAULING MACHINERY INCLUDING OPERATION OF HAND AND POWER OPERATED WINCHES)

GROUP 2	2016-11-07	29.15	15.65	44.80
	2017-05-01	29.70	16.60	46.30

604 FOUR OR MORE AXLE UNIT, STRAIGHT BODY TRUCK

GROUP 3	2016-11-07	29.05	15.65	44.70
	2017-05-01	29.60	16.60	46.20

605 BITUMINOUS DISTRIBUTOR DRIVER

606 BITUMINOUS DISTRIBUTOR (ONE PERSON OPERATION)

607 THREE AXLE UNITS

GROUP 4	2016-11-07	28.20	14.80	43.00

608 BITUMINOUS DISTRIBUTOR SPRAY OPERATOR (REAR AND OILER)

609 DUMP PERSON

610 GREASER

611 PILOT CAR DRIVER

612 RUBBER-TIRED, SELF-PROPELLED PACKER UNDER 8 TONS

613 TWO AXLE UNIT

614 SLURRY OPERATOR

615 TANK TRUCK HELPER (GAS, OIL, ROAD OIL, AND WATER)

616 TRACTOR OPERATOR, UNDER 50 H.P.

SPECIAL CRAFTS

701 HEATING AND FROST INSULATORS	2016-11-07	40.31	16.75	57.06
702 BOILERMAKERS	2016-11-07	35.15	27.02	62.17
703 BRICKLAYERS	2016-11-07	32.91	22.82	55.73
704 CARPENTERS	2016-11-07	34.57	18.16	52.73
705 CARPET LAYERS (LINOLEUM)	2016-11-07	32.13	12.85	44.98
706 CEMENT MASONS	2016-11-07	33.95	17.63	51.58
707 ELECTRICIANS	2016-11-07	34.92	25.06	59.98
	2017-06-03	35.83	25.71	61.54
711 GROUND PERSON	2016-11-07	21.61	11.03	32.64
712 IRONWORKERS	2016-11-07	31.54	24.90	56.44
713 LINEMAN	2016-11-07	32.27	14.11	46.38
714 MILLWRIGHT	2016-11-07	36.95	16.21	53.16

715	PAINTERS (INCLUDING HAND BRUSHED, HAND SPRAYED, AND THE TAPING OF PAVEMENT MARKINGS)	2016-11-07	30.06	17.62	47.68
716	PILEDRIVER (INCLUDING VIBRATORY DRIVER OR EXTRACTOR FOR PILING AND SHEETING OPERATIONS)	2016-11-07	34.57	18.16	52.73
717	PIPEFITTERS . STEAMFITTERS	2016-11-07	40.85	18.66	59.51
719	PLUMBERS	2016-11-07	40.85	18.66	59.51
721	SHEET METAL WORKERS	2016-11-07	30.51	24.28	54.79
723	TERRAZZO WORKERS	FOR RATE CALL 651-284-5091 OR EMAIL DLI.PREVWAGE@STATE.MN.US			
724	TILE SETTERS	FOR RATE CALL 651-284-5091 OR EMAIL DLI.PREVWAGE@STATE.MN.US			
725	TILE FINISHERS	FOR RATE CALL 651-284-5091 OR EMAIL DLI.PREVWAGE@STATE.MN.US			
727	WIRING SYSTEM TECHNICIAN	2016-11-07	36.90	14.97	51.87
		2017-07-01	37.82	14.97	52.79
728	WIRING SYSTEMS INSTALLER	2016-11-07	25.84	12.40	38.24
		2017-07-01	26.49	12.40	38.89
729	ASBESTOS ABATEMENT WORKER	2016-11-07	29.20	17.43	46.63
		2017-01-01	29.95	18.03	47.98
730	SIGN ERECTOR	FOR RATE CALL 651-284-5091 OR EMAIL DLI.PREVWAGE@STATE.MN.US			

PROJECT LABOR AGREEMENT

NO STRIKE, NO LOCKOUT

PUBLIC SECTOR

CITY OF DULUTH

&

Vendor

Project name

Project No.

Template

INDEX	
AGREEMENT	1
ARTICLE I - PURPOSE	2
ARTICLE II - SCOPE OF THE AGREEMENT	2
ARTICLE III - UNION RECOGNITION AND REPRESENTATION	5
ARTICLE IV - LABOR HARMONY CLAUSE	5
ARTICLE V - WORK STOPPAGES AND LOCKOUTS	6
ARTICLE VI - DISPUTES AND GRIEVANCES	6
ARTICLE VII - JURISDICTIONAL DISPUTES	7
ARTICLE VIII - NO DISCRIMINATION	7
ARTICLE IX - SAVINGS AND SEPARABILITY	8
ARTICLE X - DURATION OF THE AGREEMENT	8
SCHEDULE “A”	11

Template

AGREEMENT

This Project Labor Agreement (hereinafter, the "Agreement"), effective as of the date of attestation by the City Clerk, by and between the various contractors engaged in the construction of facilities to be known as the (Project). The parties to this Agreement are the Building and Construction Trades Council, on behalf of its affiliated Local Unions (hereinafter "Union" or "Unions"), the City of Duluth (hereinafter "Owner") and Contractor (hereinafter "Construction Manager/General Manager," "Contractor," and "Contractors").

It is understood by the parties to this Agreement that it is the policy of the Owner that the construction work covered by this Agreement shall be contracted to Contractors who agree to be bound by the terms of this Agreement. Therefore, the Union agrees that other Contractors may execute the Agreement for the purpose of covering that work. The Construction Manager/General Contractor shall monitor compliance with this Agreement by all Contractors who through their execution of this Agreement, together with their subcontractors, have become bound hereto.

The term "Contractor" shall include all Contractors and subcontractors of whatever tier engaged in on-site construction work within the scope of this Agreement.

The Union and all signatory Contractors agree to abide by the terms and conditions contained in this Agreement with respect to the administration of the Agreement by the Owner and the performance of the construction by the Contractor of the Project. This Agreement represents the complete understanding of the parties, and it is further understood that no Contractor party is required to sign any other agreement as a condition of performing work within the scope of this Agreement. No practice, understanding or agreement between a Contractor and a Union party which is not explicitly set forth in this Agreement shall be binding on any other party unless endorsed in writing by the Project Contractor.

Template

ARTICLE I - PURPOSE

The (Project), an undertaking of the Owner, is a public project which will employ numbers of skilled and unskilled workers. Construction of the Project will entail utilization of the construction industry in an area having multiple labor contracts and employer associations. Consequently, conflicts within labor-management relations could cause delay or disruption of the efficient completion of the project unless maximum cooperation of all segments of the construction industry is obtained. This Agreement is to establish as the minimum standards on the Project the hours and working conditions as those prevailing for the largest number of workers engaged in the same classes of work within the area.

It is in the public interest that the Project progress and be completed in an expeditious and efficient manner, free of disruption or delay of any kind. Therefore, it is essential to secure optimum productivity and to eliminate any delays in the work. In recognition of the special needs of this Project and to maintain a spirit of harmony, labor-management peace and stability during the term of this Project Labor Agreement, the parties agree to establish effective and binding methods for the settlement of all misunderstandings, disputes or grievances which may arise. Therefore, the Unions agree not to engage in any strike, slowdown or interruption of work and the Contractor agrees not to engage in any lockout.

ARTICLE II - SCOPE OF THE AGREEMENT

Section 1. This Agreement, hereinafter designated as the "Project Labor Agreement" or "Agreement," shall apply and is limited to all construction work included in all Bid Categories for the (Project), under the direction of the signatory Contractors and performed by those Contractor(s) of whatever tier which have contracts awarded for such work on and after the effective date of this Agreement with regard to the Project.

Such Project is generally described as the construction of: Project

Template

Section 2. It is agreed that all direct subcontractors of a Contractor, of whatever tier, who have been awarded contracts for work covered by this Agreement on or after the effective date of this Agreement shall be required to accept and be bound by the terms and conditions of the Project Labor Agreement.

Section 3. The provisions of this Project Labor Agreement shall apply to all craft employees represented by any Union listed in Schedule A hereto attached and shall not apply to other field personnel or managerial or supervisory employees as defined by the National Labor Relations Act.

Section 4. All employees covered by this Agreement shall be classified in accordance with work performed and paid the base hourly wage rates for those classifications as specified in the attached Schedule A.

Section 5. The Contractors agree to pay contributions to the established employee benefit funds in the amounts designated in the appropriate Schedule A.

Contractors that are not signatory to a collective bargaining agreement beyond the scope of this Agreement ("PLA contractor") may select to participate in the legally established industry health reimbursement arrangement ("HRA") plan, in lieu of contributing to the respective bona fide benefit funds as designated in Schedule A. The amount of the contribution is based on the difference between the contribution amount of the bona fide Schedule A benefit funds and the cost of the PLA contractor's bona fide non-discretionary plans. Contributions must be made on behalf of named employees. Participating contractors will submit to the Trustees of the HRA trust and plan a copy of their plan, summary plan description, and the premium structure for workers covered under the PLA contractor's bona fide, non-discretionary plans. The value of the PLA contractor's benefit plans is subject to confirmation by the Trustees of the HRA trust and plan. This may include an independent audit according to a policy as established by the Trustees. Contractors are required to submit certified payroll reports to the Trustees or authorized administrator in order to confirm compliance with the terms of the HRA trust and plan.

Template

The Contractors adopt and agree to be bound by the written terms of the legally-established Trust Agreements (or in lieu thereof, the aforementioned HRA plan and trust including any policies) specifying the detailed basis on which payments are to be made into, and benefits paid out of, such Trust Funds. The Contractors authorize the parties to such Trust Agreements to appoint trustees and successor trustees to administer the Trust funds and hereby ratify and accept the Trustees so appointed as if made by the Contractors.

Section 6. In the event of any conflict between any provisions of this Agreement and in the Local Area Agreements, the terms of this Agreement will be applied. In other words, where a subject covered by the provisions of this Project Labor Agreement is also covered by the Local Area Agreement the provisions of this Project Labor Agreement shall prevail. Where a subject is covered by the Local Area Agreement and not covered by this Project Labor Agreement, the Local Area Agreement provisions shall prevail.

Section 7. This Agreement shall only be binding on the signatory parties hereto and shall not apply to the parents, affiliates, subsidiaries, or other ventures of any such party.

Section 8. This Agreement shall be limited to work historically recognized as construction work. Nothing contained herein shall be construed to prohibit, restrict, or interfere with the performance of any other operation, work or function which may occur in or around the Project site or be associated with the development of the Project, or with the ongoing operations of the Owner.

Section 9. It is understood that the liability of any Contractor and the liability of the separate Unions under this Agreement shall be several and not joint. The Union agrees that this Agreement does not have the effect of creating any joint employment status between or among Owner and any Contractor.

Template

Section 10. All workers delivering fill, sand, gravel, crushed rock, transit/concrete mix, asphalt or other similar materials and all workers removing any materials from the construction site as required by the specifications are subject to the provisions of the Minnesota state prevailing wage law and are entitled to the appropriate area standard wage. For purposes of this contract, such materials are for specified future use and per Minnesota state prevailing wage law delivery and pickup of the above-listed materials constitutes incorporation.

ARTICLE III - UNION RECOGNITION AND REPRESENTATION

Section 1. The Contractor recognizes the Union as the sole and exclusive bargaining representative of all craft employees working on facilities within the scope of this Agreement.

Section 2. Authorized representatives of the Union shall have access to the Project, provided they do not interfere with the work of employees and further provided that such representatives fully comply with the posted visitor and security and safety rules of the Project.

ARTICLE IV - LABOR HARMONY CLAUSE

The contractor shall furnish labor that can work in harmony with all other elements of labor employed on that (Project) and shall submit a labor harmony plan to demonstrate how this will be done. “Harmony” shall include the provision of labor that will not, either directly or indirectly, cause or give rise to any work disruptions, slow downs, picketing, stoppages, or any violence or harm to any person or property while performing any work, or activities incidental thereto at the (project). The labor harmony plan should include the company's labor management policies, collective bargaining agreements if any and their expiration dates, past labor relations history, a listing of activities anticipated under this contract that may potentially cause friction with on-site workers, and procedures the company will undertake to eliminate this friction.

The contractor agrees that it shall require every lower-tier subcontractor to provide labor that will work in harmony with all other elements of labor employed in the work, and will include the

Template

provisions contained in the paragraph above, in every lower-tier subcontract let for work under this contract.

The requirement to provide labor that can work in harmony with all other elements of labor employed in the work throughout the contract performance is a material element of this contract. Failure by the contractor or any of its lower tier subcontractors to comply with this requirement shall be deemed a material breach of the contract which will subject the contractor to all rights and remedies the city of Duluth may have, including without limitation the right to terminate the contract.

ARTICLE V - WORK STOPPAGES AND LOCKOUTS

Section 1. There shall be no strike, picketing, work stoppages, slowdowns or other disruptive, activity for any reason by the Union or employees against any Contractor covered under this Agreement, and there shall be no lockout by the Contractor. Failure of any Union or employee to cross any picket line established by any union, signatory or non-signatory, or any other organization, at or in proximity to the Project site is a violation of this Article.

Section 2. Any party alleging a breach of Section 1, of Article IV shall have the right to petition a court for temporary and permanent injunctive relief. The moving party need not show the existence of irreparable harm, and shall be required to post bond only to secure payment of court costs and attorney fees as may be awarded by the court.

ARTICLE VI - DISPUTES AND GRIEVANCES

Section 1. This Agreement is intended to provide close cooperation between management and labor. The Construction Manager/General Contractor and the Building and Construction Trades Council shall each assign a representative to this Project for the purpose of assisting the Local Unions, together with the Contractor, to complete the construction of the Project economically, efficiently, continuously and without interruption, delays or work stoppages.

Template

Each Contractor shall hold a pre-job conference with the Union and Construction Manager/General Contractor to clear up any project question and work assignments in which there is thought to be a difference in opinion. Every effort will be made to hold such conference well in advance of actual work performance.

Section 2. The Contractor, Union, and employees collectively and individually, realize the importance to all parties to maintain continuous and uninterrupted performance of the work of the Project, and agree to resolve disputes over grievances in accordance with the arbitration provisions set forth in the Local Area Agreements in effect with the Unions listed in Schedule A attached hereto.

ARTICLE VII - JURISDICTIONAL DISPUTES

Section 1. There will be no strikes, work stoppages, slowdowns, or other disruptive activity arising out of any jurisdictional dispute. Pending the resolution of the dispute, the work shall continue uninterrupted as assigned by the Contractor.

Section 2. Building construction work shall be assigned by the Contractor in accordance with the procedural rules of the Plan for the Settlement of Jurisdictional Disputes in the Construction Industry (hereinafter the "Plan"). Any jurisdictional dispute over the Contractor's assignment of work shall be settled in accordance with the provisions of the Plan.

Section 3. Where a jurisdictional dispute involves the International Brotherhood of Teamsters, it shall be referred for resolution to that International Union and the disputing International Union. The resolution of the dispute shall be reduced to writing, signed by the authorized representative of the International Unions and the Contractor. The assignments made by the Contractor shall be followed until such time as the dispute is resolved in accordance with this Section.

Template

ARTICLE VIII - NO DISCRIMINATION

Section 1. The Contractor and Union agree that they will not discriminate against any employee or applicant for employment because of his or her membership or nonmembership in a Union or based upon race, color, religion, sex, national origin or age in any manner prohibited by law or regulation.

Section 2. Any complaints regarding application of the provisions of Section 1 should be brought to the immediate attention of the involved Contractor for consideration and resolution.

Section 3. The use of the masculine or feminine gender in this Agreement shall be construed as including both genders.

ARTICLE IX - SAVINGS AND SEPARABILITY

It is not the intention of the parties to violate any laws governing the subject matter of this Agreement. The parties hereto agree that in the event any provisions of the Agreement are finally held determined to be illegal or void as being in contravention of any applicable law, the remainder of the Agreement shall remain in full force and effect unless the part or parts so found to be void are wholly inseparable from the remaining portions of this Agreement. Further, the contractor and Union agree that if and when any and all provisions of this Agreement are finally held or determined to be illegal or void by Court of competent jurisdiction, the parties will promptly enter into negotiations concerning the substance affected by such decision for the purpose of achieving conformity with the requirements of an applicable law and the intent of the parties hereto.

ARTICLE X - DURATION OF THE AGREEMENT

The Project Labor Agreement shall be effective as of the date of attestation by the City Clerk, and shall continue in effect for the duration of the Project construction work described in Article

Template

II hereof. Construction of any phase, portion, section or segment of the project shall be deemed complete when such phase, portion, section or segment has been turned over to the Owner and has received the final acceptance from the Owner's representative.

Since there are provisions herein for no strikes or lockouts in the event any changes are negotiated and implemented under a Local Area Agreement during the term of this Agreement, the Contractor agrees that, except as specified herein, such changes shall be recognized and shall apply retroactively to the termination date in the particular Local Agreement involved. Each Contractor which has a Local Agreement with a Union at the time that its contract at the project commences shall continue it in effect with each said Union so long as the Contractor remains on the project. In the event any such Local Area Agreement expires, the Contractor shall abide by all of the terms of the expired Local Agreement until agreement is reached on a new Local Agreement, with any changes being subject to the provisions of this Agreement.

The Union agrees that there will be no strikes, work stoppages, sympathy actions, picketing, slowdowns or other disruptive activity affecting the Project by any Union involved in the negotiation of a Local Area Agreement nor shall there be any lockout on this Project affecting the Union during the course of such negotiations.

Template

IN WITNESS WHEREOF, the parties have hereunto set their hands on the date of attestation shown below.

DULUTH BUILDING AND
CONSTRUCTION TRADES COUNCIL

By: _____

Its: _____
(Printed Name/Title)

Date: _____

VENDOR

By: _____

Its: _____
(Printed Name/Title)

Date: _____

Phone No.: _____

CITY OF DULUTH

By: _____
Mayor

Attest:

_____
City Clerk

Date: _____

_____
City Auditor

Date: _____

_____
Assistant City Attorney

Date: _____

Template

SCHEDULE "A"

A-1 Asbestos Workers Local 49
A-2 Boilermakers Local 647
A-3 BAC Local 1 Chapter 3 Duluth & Iron Range
A-4 Carpenters Local 361
A-5 Cements Masons/Plasterers Local 633
A-6 Elevator Constructors Local 9
A-7 Glaziers Local 106
A-8 IBEW Local 242
A-9 Iron Workers Local 512
A-10 Laborers Local 1091
A-11 Millwrights & Machinery Erectors Local 1348
A-12 Operating Engineers Local 49
A-13 Painters & Allied Trades Local 106
A-14 Plumbers & Steamfitters Local 11
A-15 Roofers Local 96
A-16 Sheet Metal Workers Local 10
A-17 Sprinkler Fitters Local 669
A-18 Teamsters Local 346

Template

Building Trades Affiliates
Contract Expirations

Heat & Frost Insulators Local 49	May 31, 2017
Boilermakers Local 647	December 31, 2017
Bricklayers Local 1	April 30, 2018
Carpenters Local 361	April 30, 2017
Cement Masons Local 633	April 30, 2017
Elevator Constructors Local 9	July 8, 2017
Glaziers Local 106	April 30, 2017
IBEW Local 242	May 31, 2019
Iron Workers Local 512	April 30, 2019
Laborers Local 1091	April 30, 2017
Millwright Local 1348	April 30, 2018
Operator Engineers Local 49 (Bldrs)	April 30 2019
Operator Engineers Local 49 (Hwy Heavy)	April 30, 2017
Painters Local 106	April 30, 2017
Plumbers & Steamfitters Local 11	April 30, 2017
Roofers Local 96	June 30, 2021
Sheet Metal Local 10	April 30, 2019
Sprinkler Fitters Local 669	March 31, 2021
Teamsters Local 346	April 30, 2017

(Updated 3/3/17)

Affiliated AFL-CIO

DULUTH BUILDING AND CONSTRUCTION TRADES COUNCIL

2002 LONDON ROAD | LABOR CENTER | DULUTH, MINN. 55812

Officers
Craig Olson
President
Darrell Godbout
Vice President
Dan Olson
Secretary
Jeff Daveau
Treasurer

Boilermakers #647
Bricklayers #1
Carpenters #361
Cement Masons #633
Elevator #9
IBEW #242
Insulators #49
Ironworkers #512
Laborers #1091
Millrights #1348
Operators #49
Painters #106
Pipefitters #11
Roofers #96
Sheetmetal #10
Sprinklerfitters #669
Teamsters #346

ASBESTOS WORKERS LOCAL 49
Dave Cartwright
2002 London Road #210
Duluth, MN 55812
(218) 724-3223 / Fax# 724-1870
dave@insulatorslocal49.org

BOILERMAKERS LOCAL 647
Bill Polchow
1007 NW 4th Street, Ste C
Grand Rapids, MN 55744
(218) 326-2522 / Fax# SAME
bpolchow647@outlook.com

BAC LOCAL #1 CHAPTER 3 DULUTH & IRON RANGE
Stan (Ogie) Paczynski
2002 London Road #100
Duluth, MN 55812
(218) 724-8374 / Fax# 724-8341
spaczynski@bac1mn-nd.org

CARPENTERS LOCAL 361
Chris Hill
5238 Miller Trunk Hwy
Hermantown, MN 55811
(218) 724-3297 / Fax# 724-8536
chill@ncsrcc.org

CEMENT MASONS LOCAL 633
Michael Syversrud
2002 London Road #112
Duluth, MN 55812
(218) 724-2323 / Fax# 724-2472
mikes@local633.org

ELEVATOR CONSTRUCTORS LOCAL 9
Dave Aaserud
433 Little Canada Rd E
Little Canada, MN 55117
(651) 287-0817 / Fax# 287-0820
d.aaserud@local9.com

IBEW LOCAL 242
Don Smith
2002 London Road #111
Duluth, MN 55812
(218) 728-6895 / Fax# 728-1965
dsmithlcl242@unions-america.com

IRON WORKERS LOCAL 512
Darrell Godbout, ***Vice President***
3752 Midway Road
Hermantown, MN 55810
(218) 724-5073 / Fax# 724-1525
darrell@iron512.com

LABORERS LOCAL 1091
Dan Olson, ***Secretary***
2002 London Road #119
Duluth, MN 55812
(218) 728-5151 / Fax# 728-2431
laborers@local1091.com

MILLRIGHTS & MACHINERY ERECTORS LOCAL 1348
Wayne Nordin
726 4th Street N
Virginia, MN 55792
(218) 741-6314 / Fax# 741-6017
wnordin@ncsrcc.org

OPERATING ENGINEERS LOCAL 49
Eric Gulland & Mike Parrott
2002 London Road #116
Duluth, MN 55812
(218) 724-3840 / Fax# 728-1441
edgulland@local49.org
mwparrott@local49.org

PAINTERS LOCAL 106
Craig Olson, ***President***
2002 London Road #106
Duluth, MN 55812
(218) 724-6466 / Fax# 724-7359
president@duluthbuildingtrades.com

PLUMBERS & FITTERS LOCAL 11
Jeff Daveau, ***Treasurer***
4402 Airpark Boulevard
Duluth, MN 55811
(218) 727-2199 / Fax# 727-2298
jeff@ualocal11.com

ROOFERS LOCAL 96
Vance Anderson
1145 Villa Vista Circle
Cromwell MN 55726
(218) 644-1096 / Fax# SAME
valocal96@yahoo.com

SHEET METAL WORKERS LOCAL 10
Doug Christy
6279 Industrial Road
Saginaw, MN 55779
(218) 724-6873 / Fax# SAME
dchristy@smw10.org

SPRINKLER FITTERS LOCAL 669
James Westby
PO Box 398
Mabel, MN 55954
(507) 493-5671 / Fax# 493-5481
westby@mabeltel.coop

TEAMSTERS LOCAL 346
Rod Alstead
2802 West 1st Street
Duluth, MN 55806
(218) 628-1034 / Fax# 628-0246
local@teamsters346.com

INTERNATIONAL ASSOCIATION OF

Heat & Frost Insulators & Allied Workers

Local 49

2002 London Road
Duluth, MN 55812

Tel: 218-724-3223
Fax: 218-724-1870
Cell: 218-590-0374

May 28, 2016

To whom it may concern,

The allocation of the wage increase effective June 1st 2016 is as follows:

	Mechanic	4th Year	3rd Year	2nd Year	1st Year
Base Wage	$28.77	$21.83	$19.13	$16.49	$13.79
Savings	$8.00	$6.00	$4.76	$3.50	$2.26
Union Dues	$3.54	$2.83	$2.48	$2.12	$1.77
Health & Welfare	$7.20	$7.20	$7.20	$7.20	$7.20
Pension	$9.00	$7.20	$5.76	$4.30	$2.86
Local Training	$0.50	$0.50	$0.50	$0.50	$0.50
Nat'l Training	$0.05	$0.05	$0.05	$0.05	$0.05
Industry Fund	$0.15	$0.15	$0.15	$0.15	$0.15
LMCT	$0.05	$0.05	$0.05	$0.05	$0.05
Total	**$57.26**	**$45.81**	**$40.08**	**$34.36**	**$28.63**
Total Taxable	*$40.31*	*$30.66*	*$26.37*	*$22.11*	*$17.82*

Please feel free to call the Local office with questions or concerns.

Sincerely,

David Cartwright
Business Manager

Affiliated with the AFL-CIO, Building and Construction Trades Department, Metal Trades Department and Canadian Labour Congress

PRINTED IN U.S.A.

International Brotherhood of

BOILERMAKERS · IRON SHIP BUILDERS

9459 N.W. Highway 10, Suite 105
Ramsey, MN 55303-7280
S 3

Local Lodge No. 647

BLACKSMITHS · FORGERS & HELPERS

Luke A. Voigt
Business Manager/Secretary Treasurer
763-712-9930 . Fax: 763-712-9935

November 22, 2016

TO WHOM IT MAY CONCERN:

The following wage package changes listed below become effective 01/01/2017 thru 12/31/2017 for Boilermakers Local Lodge #647. Per the Great Lakes Articles of Agreement for the year of 2017, there is a $1.35 increase which has been allocated to the wages. Also, the rate for General Foreman and Foreman increased $.50 per hour.

CHANGES AS OF:	January 1, 2017
Increase General Foreman	$ 1.85
Increase Foreman	1.85
Increase Journeyman	1.35

Effective:	01/01/2017
General Foreman Wage	$ 41.50
Foreman Wage	39.50
Journeyman Wage	36.50
Pension Trust	14.14
Annuity Trust	4.40
Health & Welfare Fund	7.07
Retiree Welfare Plan	.50
Apprenticeship Fund	.40
MOST	.34
647 D&T	.51
Deductions (after tax)	
Vacation Trust	2.00
647 Political Action Fund	.05

All other benefits and deductions remain the same for the Great Lakes Articles of Agreement as listed further in this letter.

Subsistence will be paid under the terms and conditions of the Great Lakes Articles of Agreement. For the provisions of the agreement on subsistence, Addendum A of the agreement states effective 01/01/2017 thru 12/31/2017 the daily rate of Subsistence is $65.00 per day if a Boilermaker's permanent address is 50 miles from the jobsite.

Addendum B was created and instilled in the Great Lakes Area Articles of Agreement. This addendum is in force from March 1, 2017 thru May 31, 2017 in the states of North Dakota and South Dakota and needs to be renewed each year thereafter. The addendum outlines a $2.00 hourly wage increase for certified pressure (tube) welding Journeymen Boilermakers and certified pressure (tube) welding

Apprentices shall receive Journeyman rate during this timeframe while working in the jurisdiction outlined above. Addendum B will be provided upon request, please contact Local 647 for a copy.

Boilermaker-Blacksmith National Pension Trust ($14.14), National Annuity ($4.40), National Health & Welfare Fund ($7.07), Boilermakers Great Lakes Region Retiree Welfare Plan ($.50), Boilermakers 647 D&T Fund ($.51), and Boilermakers 647 Political Action Fund ($.05 deducted after taxes) are to be paid on hours PAID, not hours worked.

Vacation Trust ($2.00 deducted after taxes), Apprenticeship Fund ($.40) and MOST ($.34) are to be paid on hours WORKED.

647 Political Action Fund and 647 D&T Fund monies will be submitted to Local 647 on separate forms and will require separate checks for each fund.

Boilermakers receive time and one-half over the established workday of eight hours and all time worked on Saturdays. All time worked on Sundays and holidays are double time.

Effective November 1, 2011, Field Dues increased to 4.25% of the gross pay, which is remitted to Local 647.

An Emergency Work Addendum has been added to the Great Lakes Articles of Agreement which provides for time and one half rate of pay for unscheduled emergency outages. If you would like a copy of this addendum please contact Local 647.

This is the first year of our three year agreement. In 2018 there will be a $1.35 increase and in 2019 there will be a $1.40 increase, both yet to be allocated.

If you have any questions please call me at 763-712-9930.

Very truly yours,

Luke A. Voigt
Business Manager/Secretary Treasurer
Boilermakers Local Lodge #647

LAV/vm
opeiu #12

Bricklayers and Allied Craftworkers

Local Union 1 Minnesota / North Dakota

312 Central Avenue, Suite 328
Minneapolis, Minnesota 55414

"Building For the Future"

TELEPHONE: 612/379-2966
FAX: 612/379-8754

MICHAEL J COOK
President/Secretary-Treasurer

To: All Associated General Contractors
Minnesota Masonry Contractors
Independent Contractors
Chapter #3
Duluth Area

May 6, 2016

Scope of the Agreement
This agreement shall cover all of the part of St. Louis County, south of a line between townships 54 and 55 (two miles north of Cotton), also the eastern half of Aitkin County on a line with the northeast boundary line of Mille Lacs County, also Carlton, Lake, Cook, Pine and Kanabec.

BRICKLAYERS AND ALLIED CRAFTWORKERS
LOCAL UNION 1 MINNESOTA / NORTH DAKOTA
DULUTH AREA – BRICKLAYERS, BLOCKLAYERS AND P.C.C.'S

This is to advise you that the new working agreement calls for a $1.90 increase per hour with rates retroactive to May 1, 2016. Please inform your bookkeeping department of the following rates.

The total wage rate effective May 1, 2016 for members of the Bricklayers and Allied Craftworkers will be as follows:

WAGES	HEALTH $BANK – RPP	HRA	IU & PPA PENSION	LOCAL PENSION	DUL ANN	DUL VAC	DUES	IMI	APPR	FCF	TOTAL
29.64	(6.96 + 1.10)	.88	(1.50 + .52)	7.15	3.85	2.00	1.27	.56	.30	.02	55.75

Base Rate:	$29.64
Vacation, Dues Check Off:	$3.27
Taxable Amount:	$32.91

FOREMAN RATE - The **NEW** Foreman rate shall be an additional **$3.50** above the scale.
REFRACTORY - The Refractory Base Wage rate shall be $31.14 with above fringe benefits.
VACATION PAY - Vacation Pay shall be pyramided in all overtime pay. Time and one-half = $3.00
Double-time =$4.00

Sincerely,
Michael J Cook

Michael J. Cook
President / Secretary - Treasurer
Bricklayers and Allied Craftworkers
Local Union 1Minnesota / North Dakota
8 – 2016

APPRENTICE WAGES

BASE WAGE	TAXABLE
0 - 1999 hours 65% - $19.27	$22.54*
2000 - 3999 hours 75% - $22.23	$22.50*
4000 - 5999 hours 85% - $25.19	$28.46*
6000 hours full wages & fringe benefits *	

Taxable wage - Includes Vacation and Dues

Bricklayers and Allied Craftworkers

Local Union 1 Minnesota / North Dakota

312 Central Avenue, Suite 328
Minneapolis, Minnesota 55414

"Building For the Future"

TELEPHONE: 612/379-2966
FAX: 612/379-8754

MICHAEL J. COOK
President/Secretary-Treasurer

To: All Associated General Contractors
Minnesota Tile Contractors
Independent Contractors
Chapter #3
Duluth Area

Scope of the Agreement
This agreement shall cover the counties of St. Louis, Koochiching, Itasca, Aitkin, Carlton, Lake, and Cook. The agreement shall also cover all of the part of Pine County north of County Road 30 and include the city of Sandstone.

April 29, 2016

BRICKLAYERS AND ALLIED CRAFTWORKERS
LOCAL UNION 1 MINNESOTA / NORTH DAKOTA

DULUTH AREA –TILE LAYERS

This is to advise you that the new working agreement calls for a $1.40 increase per hour on May 1, 2016. Please inform your bookkeeping department of the following rates.

The total wage rate effective May 1, 2016 for members of the Bricklayers and Allied Craftworkers will be as follows:

WAGES	HEALTH $BANK – RPP	HRA	IU & PPA PENSION	LOCAL PENSION	LOCAL ANNUITY	VAC.	DUES	IMI	APPR	FCF	TOTAL
23.32	(5.65 + 1.10)	1.21	(1.50 + .52)	7.15	4.72	.50	1.09	.47	.20	.02	47.45

Base Rate: $23.32
Vacation, Dues Check Off: $1.59
Taxable Amount: $24.91

Foreman shall receive an additional $1.00 above the scale.

APPRENTICESHIP WAGES

	BASE WAGE	TAXABLE
0 – 1999 hours	90% - $20.99	$22.58 *
2000 - 3999 hours	95% - $22.15	$23.74 *

4000 hours full wage & fringe benefits

* Taxable wage = Includes Dues*

Sincerely,

Michael J. Cook

Michael J. Cook
President / Secretary - Treasurer
Bricklayers and Allied Craftworkers
Local Union 1 Minnesota / North Dakota

46-2016

Bricklayers and Allied Craftworkers

Local Union 1 Minnesota / North Dakota

312 Central Avenue, Suite 328
Minneapolis, Minnesota 55414

"Building For the Future"

TELEPHONE: 612/379-2966
FAX: 612/379-8754

MICHAEL J. COOK
President/Secretary-Treasurer

To: All Associated General Contractors
Minnesota Tile Contractors
Independent Contractors
Chapter #3
Duluth Area

Scope of the Agreement
This agreement shall cover the counties of St. Louis, Koochiching, Itasca, Aitkin, Carlton, Lake, and Cook. The agreement shall also cover all of the part of Pine County north of County Road 30 and include the city of Sandstone.

April 29, 2016

BRICKLAYERS AND ALLIED CRAFTWORKERS
LOCAL UNION 1 MINNESOTA / NORTH DAKOTA
DULUTH AREA - TILE FINISHERS

This is to advise you that the new working agreement calls for a $1.40 increase per hour on May 1, 2016. Please inform your bookkeeping department of the following rates.

The total wage rate effective May 1, 2016 for members of the Bricklayers and Allied Craftworkers will be as follows:

WAGES	HEALTH $BANK - RPP	HRA	IU & PPA PENSION	LOCAL PENSION	LOCAL ANNUITY	VAC.	DUES	IMI	APPR	FCF	TOTAL
16.54	(5.65 + 1.10)	1.00	(1.50 + .52)	7.15	.54	.50	.87	.36	.20	.02	35.95

Base Rate:	$16.54
Vacation, Dues Check Off:	$1.37
Taxable Amount:	$17.91

APPRENTICESHIP WAGES

	BASE WAGE	TAXABLE
0 - 999 hours	70% - $11.58	$12.95*
1000 – 1999 hours	75% - $12.41	$13.78*
2000 -2999 hours	80% - $13.23	$14.60*
3000 - 3999 hours	85% - $14.07	$15.43*
4000 hours full wage & fringe benefits		

* Taxable wage = Includes Dues*

Sincerely,

Michael J. Cook

Michael J. Cook
President / Secretary - Treasurer
Bricklayers and Allied Craftworkers
Local Union 1 Minnesota / North Dakota

47-2016

Northern Minnesota

Local 361

Commercial Carpenter Wage Rates

Effective May 1, 2016

Classification		Percent (%)	Gross Wages	Deductions: Savings	Deductions: Dues	Fringe Benefits: Health	Fringe Benefits: DB Pension	Fringe Benefits: DC Pension	Fringe Benefits: Apprentice/ Education	Fringe Benefits: Fair Contracting	Total Package
Commercial Foreman (+2.00 Above JP)		100%	$31.97	-$1.30	-$1.20	$6.81	$6.60	$3.00	$0.55	$0.02	$48.95
Commercial Journeyperson		100%	$29.97	-$1.30	-$1.20	$6.81	$6.60	$3.00	$0.55	$0.02	$46.95
Apprentice	6125-7000	97%	$29.07	-$1.30	-$0.90	$6.81	$6.60	$3.00	$0.55	$0.02	$46.05
	5250-6125	93%	$27.87	-$1.30	-$0.90	$6.81	$6.60	$3.00	$0.55	$0.02	$44.85
	4375-5250	88%	$26.37	-$1.30	-$0.90	$6.81	$6.60	$3.00	$0.55	$0.02	$43.35
	3500-4375	83%	$24.88	-$1.30	-$0.90	$6.81	$6.60	$3.00	$0.55	$0.02	$41.86
	2625-3500	78%	$23.38	-$1.30	-$0.90	$6.81	$6.60	$3.00	$0.55	$0.02	$40.36
	1750-2625	73%	$21.88	-$1.30	-$0.90	$6.81	$6.60	$3.00	$0.55	$0.02	$38.86
	875-1750	68%	$20.38	-$1.30	-$0.90	$6.81	$6.60	$3.00	$0.55	$0.02	$37.36
	0-875	63%	$18.88	-$1.30	-$0.90	$6.81	$6.60	$3.00	$0.55	$0.02	$35.86

Consisting of Carlton, Cook, Pine, and portions of Lake and St. Louis Counties in Minnesota and Douglas and Western Bayfield Counties in Wisconsin.

CEMENT MASONS, PLASTERERS AND SHOPHANDS
Local No. 633

of Minnesota, North Dakota, and NW Wisconsin · AFL-CIO

312 Central Avenue · Room 376 · Minneapolis, Minnesota 55414

Phone (612)379-1558 · Fax (612)379-1559

GREG MASSEY
Financial Secretary Business Manager

DAVE SCHUTTA
President

JOSEPH DeRASMI
Business Agent

BRIAN GULLICKSON
Business Agent

GREG JOHNSON
Business Agent

JEROME JOHNSON
Business Agent

MICHAEL KRAHN
Business Agen

DARRELL LENDE
Business Agent

MICHAEL SYVERSRUD
Business Agent

THOMAS REGER
Apprentice Coordinator

TO: ALL DULUTH AREA CONTRACTORS

ATTN: PAYROLL DEPT

RE: 2016 WAGE RATES - **BUILDERS** DIVISION

This Agreement shall govern work done in the areas defined as follows: All of the following counties: Aitkin, Carlton, Cook, Lake and that part of Pine County north of the northern boundaries of Dell Grove, Sandstone and Danforth townships, and that part of St. Louis County south of Co Rd 967 which is two miles north of cotton on Hwy #53, as well as the following counties in Wisconsin: Douglas, Bayfield, Washburn, Sawyer and Price.

EFFECTIVE MAY 1, 2016

BASIC WAGE*	HEALTH & WELFARE	HRA	PENSION	SAVINGS	TRAINING	TOTAL
30.86	7.48	1.25	7.94	(5.27)	.46	47.99

*The Basic Wage before the deduction of savings is the straight time wage used in determining overtime. (EXAMPLE: 1.5 X $30.86 = $46.29 TAXED, THEN MINUS $5.27 FOR SAVINGS EACH HOUR) After all taxes are deducted from the Basic Wage rate, $5.27 per hour for each hour worked shall be deducted and applied to the Minnesota Cement Masons Savings Plan.

Foreman: $2.00 above basic wage

APPRENTICE RATES:

UP TO 1000HRS	70%	21.60
1001-2000 HRS	75%	23.15
2001-3000 HRS	80%	24.69
3001-4000 HRS	85%	26.23
4001-5000 HRS	90%	27.77
5001-6000 HRS	95%	29.32

CEMENT MASONS, PLASTERERS AND SHOPHANDS
Local No. 633
of Minnesota, North Dakota, and NW Wisconsin · AFL-CIO
312 Central Avenue · Room 376 · Minneapolis, Minnesota 55414
Phone (612)379-1558 · Fax (612)379-1559

GREG MASSEY
Financial Secretary Business Manager

DAVE SCHUTTA
President

JOSEPH DeRASMI
Business Agent

BRIAN GULLICKSON
Business Agent

GREG JOHNSON
Business Agent

JEROME JOHNSON
Business Agent

MICHAEL KRAHN
Business Agen

DARRELL LENDE
Business Agent

MICHAEL SYVERSRUD
Business Agent

THOMAS REGER
Apprentice Coordinator

TO: ALL DULUTH AREA CONTRACTORS

ATTN: PAYROLL DEPT

RE: 2016 WAGE RATES - **HIGHWAY/HEAVY** DIVISION

This Agreement shall govern work done in the areas defined as follows: All of the following counties: Aitkin, Carlton, Cook, Lake and that part of Pine County north of T.24N, and that part of St. Louis County south of T.55N, as well as the following counties in Wisconsin: Ashland, Douglas, Bayfield, Burnett, Iron, Washburn, Sawyer and Price.

EFFECTIVE MAY 1, 2016

BASIC WAGE*	HEALTH & WELFARE	HRA	PENSION	SAVINGS	TRAINING	TOTAL
33.95	7.48	1.75	7.94	(5.67)	.46	51.58

*The Basic Wage before the deduction of savings is the straight time wage used in determining overtime. (EXAMPLE: 1.5 X $33.95 = $50.93, TAXED, THEN MINUS $5.67 FOR SAVINGS EACH HOUR) After all taxes are deducted from the Basic Wages, $5.67 per hour for each hour worked shall be deducted and applied to the Minnesota Cement Masons Savings Plan.

Foreman: $1.50 above basic wage

APPRENTICE RATES:

UP TO 1000HRS	70%	23.77
1001-2000 HRS	75%	25.46
2001-3000 HRS	80%	27.16
3001-4000 HRS	85%	28.86
4001-5000 HRS	90%	30.56
5001-6000 HRS	95%	32.25

CEMENT MASONS, PLASTERERS AND SHOPHANDS
Local No. 633
of Minnesota, North Dakota, and NW Wisconsin · AFL-CIO
312 Central Avenue · Room 376 · Minneapolis, Minnesota 55414
Phone (612)379-1558 · Fax (612)379-1559

GREG MASSEY
Financial Secretary Business Manager

DAVE SCHUTTA
President

JOSEPH DeRASMI
Business Agent

BRIAN GULLICKSON
Business Agent

GREG JOHNSON
Business Agent

JEROME JOHNSON
Business Agent

MICHAEL KRAHN
Business Agen

DARRELL LENDE
Business Agent

MICHAEL SYVERSRUD
Business Agent

THOMAS REGER
Apprentice Coordinator

TO: ALL NORTHERN MINNESOTA & NORTHWESTERN WISCONSIN **PLASTERING** CONTRACTORS

ATTN: PAYROLL DEPT, 2016 WAGE RATES

This Agreement shall govern work done in the areas defined as follows: All of the following counties: Aitkin, Carlton, Cook, Itasca, Lake, St. Louis, and that part of Pine County north of T.24N, as well as the following counties in Wisconsin: Ashland, Bayfield, Douglas, Iron, Sawyer, Washburn, Burnett, and Price.

EFFECTIVE MAY 1, 2016

BASIC WAGE*	HEALTH & WELFARE	HRA	PENSION	SAVINGS*	TRAINING	TOTAL
31.49	7.48	2.00	7.94	(3.60)	.46	49.37

*The Basic Wage before the deduction of savings is the straight time wage used in determining overtime. (EXAMPLE: 1.5 X $31.49 = $47.24 TAXED, THEN MINUS $3.60 FOR SAVINGS EACH HOUR). After all taxes are deducted from the Basic Wage rate, $3.60 per hour for each hour worked shall be deducted and applied to the Minnesota Cement Masons Savings Plan.

Foreman: $1.50 above basic wage

APPRENTICE RATES:

UP TO 1000HRS	70%	22.04
1001-2000 HRS	75%	23.62
2001-3000 HRS	80%	25.19
3001-4000 HRS	85%	26.77
4001-5000 HRS	90%	28.34
5001-6000 HRS	95%	29.92

INTERNATIONAL UNION OF ELEVATOR CONSTRUCTORS

LOCAL UNION NO. 9
433 Little Canada Road E.
Little Canada, MN 55117

AFFILIATED WITH THE AFL-CIO
Phone: (651) 287-0817
Fax: (651) 287-0820

Wage & Fringe Benefits: January 1, 2016

To: All Employers doing Business within the Jurisdiction of IUEC Local 9
Subject: Wage rates effective January 1, 2016 – IUEC Local 9
Minnesota, North Dakota and Western Wisconsin

In accordance with the provisions of Article V of the current labor agreement (2012-2017) between all signatory employers and the International Union of Elevator Constructors, the following rates shall be effective on January 1, 2016:

Mechanic in Charge	(112.5%)	$51.60
Mechanic	(100.0%)	$45.87
4th Year Apprentice	(80.0%)	$36.70
3rd Year Apprentice	(70.0%)	$32.11
2nd Year Apprentice	(65.0%)	$29.82
1st Year Apprentice	(55.0%)	$25.23
Probationary Apprentice	(50.0%)	$22.935
Helper	(70.0%)	$32.11

The company will make fringe benefit contributions per hour worked in accordance with the following schedule:

Health Benefit Plan	$14.425
Pension	$ 8.96
Annuity	$ 6.00
Education	$ 0.60
Elevator Ind. Work Preservation Fund	$ 0.30
TOTAL	$30.285

Vacation: 6% Hourly pay under 5 years
8% Hourly pay over 5 years

Local 106 Glaziers Wage Rates
Effective May 2, 2016

Journeyperson Wage Rates:

	Base	Health & Welfare	Pension	Annuity	FTI/UM	FTI/NT'L	FCF	LMCI	STAR	DC82/FCF	**Total**	Vac *	Check-off Dues**
Glaziers	$30.17	$7.20	$5.92	$3.90	$0.35	$0.10	$0.01	$0.10	$ 0.10	$0.01	$47.86	$2.55	$1.88
Auto Glass	$24.24	$7.20	$5.92	$3.90	$0.35	$0.10	$0.01	$0.10	$ 0.10	$0.01	$41.93	$2.55	$1.67

Apprentices Indentured BEFORE May 1, 2014:

Hours	**%**	Base	Health & Welfare	Pension	Annuity	FTI/UM	FTI/NT'L	FCF	LMCI	STAR	DC82/FCF	**Total**	Vac *	Check-off Dues**
0-1000	50	$15.09	$7.20	$5.92	$3.90	$0.35	$0.10	$0.01	$0.10	$ 0.10	$0.01	$32.78	$1.28	$1.35
1001-2000	55	$16.59	$7.20	$5.92	$3.90	$0.35	$0.10	$0.01	$0.10	$ 0.10	$0.01	$34.28	$1.40	$1.40
2001-3000	60	$18.10	$7.20	$5.92	$3.90	$0.35	$0.10	$0.01	$0.10	$ 0.10	$0.01	$35.79	$1.53	$1.45
3001-4000	70	$21.12	$7.20	$5.92	$3.90	$0.35	$0.10	$0.01	$0.10	$ 0.10	$0.01	$38.81	$1.79	$1.56
4001-5000	80	$24.14	$7.20	$5.92	$3.90	$0.35	$0.10	$0.01	$0.10	$ 0.10	$0.01	$41.83	$2.04	$1.66
5001-6000	90	$27.15	$7.20	$5.92	$3.90	$0.35	$0.10	$0.01	$0.10	$ 0.10	$0.01	$44.84	$2.30	$1.77

Apprentices Indentured on or AFTER May 1, 2014:

Hours	**%**	Base	Health & Welfare	Pension	Annuity	FTI/UM	FTI/NT'L	FCF	LMCI	STAR	DC82/FCF	**Total**	Vac *	Check-off Dues**
0-1000	50	$15.09	$7.20	$5.92	$1.95	$0.35	$0.10	$0.01	$0.10	$ 0.10	$0.01	$30.83	$1.28	$1.28
1001-2000	55	$16.59	$7.20	$5.92	$2.15	$0.35	$0.10	$0.01	$0.10	$ 0.10	$0.01	$32.53	$1.40	$1.34
2001-3000	60	$18.10	$7.20	$5.92	$2.34	$0.35	$0.10	$0.01	$0.10	$ 0.10	$0.01	$34.23	$1.53	$1.40
3001-4000	70	$21.12	$7.20	$5.92	$2.73	$0.35	$0.10	$0.01	$0.10	$ 0.10	$0.01	$37.64	$1.79	$1.52
4001-5000	80	$24.14	$7.20	$5.92	$3.12	$0.35	$0.10	$0.01	$0.10	$ 0.10	$0.01	$41.05	$2.04	$1.64
5001-6000	90	$27.15	$7.20	$5.92	$3.51	$0.35	$0.10	$0.01	$0.10	$ 0.10	$0.01	$44.45	$2.30	$1.76

*The Vacation Contribution is included in the taxable wage listed above, then deducted and remitted along with your Health & Welfare Contribution.

Revised 5/18/16					
LOCAL UNION #242					
Effective Dates	**05/31/15**		**05/29/16**		
JW Rate	**$33.90**		**$34.92**		
Foreman	**12.5%**		**12.5%**		
General Foreman	**22.5%**		**22.5%**		
NEBF	3.00%	$1.02	3.00%	$1.05	
Vacation	11.00%	$3.73	11.00%	$3.84	
H & W	27.64%	$9.37	27.21%	$9.50	
Local Pension	13.55%	$4.59	13.55%	$4.73	
Annuity	16.00%	$5.42	16.00%	$5.59	
****Total Package**	**$58.05**		**$59.65**		
LLMCC Employee .02	$58.03		$59.63		
Total Package %	**71.19%**		**70.76%**		

Total Package 2017 = $61.20 less Employee LLMCC (.02) $61.18

Total Package 2018 = $62.70 less Employee LLMCC (.02) $62.68

****These total packages do not include Apprenticeship (1%), NECA Service Charges (1.25%), Admin. Maint. Fund (.006%/hr.), NLMCC (.01 cent/hr.), or LLMCC (.04 cents/hr.).**

Apprenticeship	1% .34		1% / .35		
Service Charge	1.25% .42		1.25% / .44		
NLMCC	0.01		0.01		
Local LMCC	0.04		0.04		
Admin Maint Fund	0.20		0.21		
	1.01		**1.05**		

401k deduction - $1.00, $3.00 & $5.00 per hour (at employees discretion)

Subsistance for all jobs outside of 35 mile radius of Lake Ave & Superior Street in Duluth - $15.00

Subsistance for all jobs outside of 70 mile radius of Lake Ave & Superior Street in Duluth - $50.00

DULUTH APPRENTICE WAGE RATE INFORMATION

6th	6,500 - 8,000	85%	$29.68	Full Benefits - 5th year
5th	5,000 - 6,500	75%	$26.19	Full Benefits - 4th year
4th	3,500 - 5,000	65%	$22.70	Full Benefits - 3rd year
3rd	2,000 - 3,500	55%	$19.21	Full Benefits - 2nd year
2ND	1,000 - 2,000	50%	$17.46	H&W/NEBF - 1st year
1st	0 - 1,000	45%	$15.71	H&W/NEBF -

IRON WORKERS LOCAL UNION NO. 512 REGIONAL WAGE/FRINGE SCHEDULE

Region A

Effective June 5, 2016

Base Wage Rate	Defined Benefit Pension	Defined Contribution Pension	Health & Welfare	Apprenticeship & Training Fund	IMPACT Fund	Fair Contracting Foundation	Total Package	Voluntary CAF
$36.00	$9.75	$6.00	$8.20	$0.95	$0.27	$0.02	$61.19	$0.04

$54.00	Journeyman time and one-half rate
$72.00	Journeyman double time rate

Leadman (two employees or less)	$1.00	per hour above Base Wage Rate.
Foreman (three employees or more)	$2.50	per hour above Base Wage Rate.
General Foreman	$4.00	per hour above Base Wage Rate.

Savings Plan Deduction ($3.25 per hour)
The Employer is required to deduct $3.25 per hour worked from the Employee's after-tax wages as the Savings Plan Deduction; calculated on an hours-worked basis and does not pyramid with overtime rates of pay.

Working Dues Check-Off Deduction
The Employer is required deduct from the Employee's after-tax wages, the amount equal to **5%** of the Employee's gross wages as a working dues check-off deduction. This deduction shall not apply to per diem, subsistence, mileage or bonus payments made to the employee.

Organizing Dues Check-Off Deduction
The Employer is required to deduct $0.10 per hour worked from the Employee's after-tax wages as an organizing dues check-off deduction, calculated on an hours-worked basis and does not pyramid with overtime rates of pay.

Fair Contracting Foundation (FCF)
Included in the Total Package amount is a contribution of $0.02 per hour worked, effective in all Regions of the Union. This contribution is to be reported as a separate line item and remitted to Twin City Iron Workers Fringe Benefit Funds with the other contributions and will be forwarded to FCF appropriately.

****Contract Administration Fund (C.A.F.)**
Not included in the Total Package amount is a voluntary Employer contribution of $0.04 per hour worked for the Contract Administration Fund.

When and Where to Send Contributions and Deductions
All fringe benefit fund contributions and payroll deductions are due no later than the 20th day of the month following the month when the hours were worked and should be remitted to:

Twin City Iron Workers Fringe Benefit Funds
Wilson-McShane Corporation
3001 Metro Drive – Suite 500
Bloomington, MN 55425-1412

The Local 512 Collective Bargaining Agreement includes provisions for varying subsistence rates on projects, depending on the project location. For more specific information, please call the Local Union Main Office at (651)489-1488 or 1-(866)489-1488 (toll free).

IRON WORKERS LOCAL UNION NO. 512 REGIONAL WAGE/FRINGE SCHEDULE

Region B

Effective June 5, 2016

Base Wage Rate	Defined Benefit Pension	Defined Contribution Pension	Health & Welfare	Apprenticeship & Training Fund	IMPACT Fund	Fair Contracting Foundation	Total Package	Voluntary CAF
$31.54	$9.75	$6.00	$8.20	$0.95	$0.27	$0.02	$56.73	$0.04

$47.31	Journeyman time and one-half rate
$63.08	Journeyman double time rate

Leadman (two employees or less)	$1.00	per hour above Base Wage Rate.
Foreman (six employees or more)	$2.50	per hour above Base Wage Rate.
General Foreman	$4.00	per hour above Base Wage Rate.

Savings Plan Deduction ($3.25 per hour)
The Employer is required to deduct $3.25 per hour worked from the Employee's after-tax wages as the Savings Plan Deduction; calculated on an hours-worked basis and does not pyramid with overtime rates of pay.

Working Dues Check-Off Deduction
The Employer is required deduct from the Employee's after-tax wages, the amount equal to **5%** of the Employee's gross wages as a working dues check-off deduction. This deduction shall not apply to per diem, subsistence, mileage or bonus payments made to the employee.

Organizing Dues Check-Off Deduction
The Employer is required to deduct $0.10 per hour worked from the Employee's after-tax wages as an organizing dues check-off deduction, calculated on an hours-worked basis and does not pyramid with overtime rates of pay.

Fair Contracting Foundation (FCF)
Included in the Total Package amount is a contribution of $0.02 per hour worked, effective in all Regions of the Union. This contribution is to be reported as a separate line item and remitted to Twin City Iron Workers Fringe Benefit Funds with the other contributions and will be forwarded to FCF appropriately.

****Contract Administration Fund (C.A.F.)**
Not included in the Total Package amount is a voluntary Employer contribution of $0.04 per hour worked for the Contract Administration Fund.

When and Where to Send Contributions and Deductions
All fringe benefit fund contributions and payroll deductions are due no later than the 20th day of the month following the month when the hours were worked and should be remitted to:

Twin City Iron Workers Fringe Benefit Funds
Wilson-McShane Corporation
3001 Metro Drive – Suite 500
Bloomington, MN 55425-1412

The Local 512 Collective Bargaining Agreement includes provisions for varying subsistence rates on projects, depending on the project location. For more specific information, please call the Local Union Main Office at (651)489-1488 or 1-(866)489-1488 (toll free).

IRON WORKERS LOCAL UNION NO. 512 REGIONAL WAGE/FRINGE SCHEDULE

Region C

Effective June 5, 2016

Base Wage Rate	Defined Benefit Pension	Defined Contribution Pension	Health & Welfare	Apprenticeship & Training Fund	IMPACT Fund	Fair Contracting Foundation	Total Package	NDCC
$30.70	$9.75	$6.00	$8.20	$0.95	$0.27	$0.02	$55.89	$0.10

$46.05 Journeyman time and one-half rate
$61.40 Journeyman double time rate

Leadman (two employees or less)	$1.00	per hour above Base Wage Rate.
Foreman (three employees or more)	$2.50	per hour above Base Wage Rate.
General Foreman	$4.00	per hour above Base Wage Rate.

Savings Plan Deduction ($2.50 per hour)
The Employer is required to deduct $2.50 per hour worked from the Employee's after-tax wages as the Savings Plan Deduction; calculated on an hours-worked basis and does not pyramid with overtime rates of pay.

Working Dues Check-Off Deduction
The Employer is required deduct from the Employee's after-tax wages, the amount equal to **5%** of the Employee's gross wages as a working dues check-off deduction. This deduction shall not apply to per diem, subsistence, mileage or bonus payments made to the employee.

Organizing Dues Check-Off Deduction
The Employer is required to deduct $0.10 per hour worked from the Employee's after-tax wages as an organizing dues check-off deduction, calculated on an hours-worked basis and does not pyramid with overtime

Fair Contracting Foundation (FCF)
Included in the Total Package amount is a contribution of $0.02 per hour worked, effective in all Regions of the Union. This contribution is to be reported as a separate line item and remitted to Twin City Iron Workers Fringe Benefit Funds with the other contributions and will be forwarded to FCF appropriately.

****North Dakota Construction Council (NDCC**
The Employer agrees to contribute ten cents ($0.10) per hour worked in addition to the Total Package amounts set forth in this Agreement, for all bargaining unit work performed on sites covered by the North Dakota Construction Council (NDCC) and payable to the NDCC in accordance with the terms and conditions contained in the July 1, 2010 Letter of Understanding Relating to the North Dakota Construction Council (NDCC) between the parties to this Agreement.

When and Where to Send Contributions and Deductions
All fringe benefit fund contributions and payroll deductions are due no later than the 20th day of the month following the month when the hours were worked and should be remitted to:

Twin City Iron Workers Fringe Benefit Funds
Wilson-McShane Corporation
3001 Metro Drive – Suite 500
Bloomington, MN 55425-1412

The Local 512 Collective Bargaining Agreement includes provisions for varying subsistence rates on projects, depending on the project location. For more specific information, please call the Local Union Main Office at (651)489-1488 or 1-(866)489-1488 (toll free).

BUILDING WAGE RATES

Duluth/Cloquet Local #1091

Effective May 1, 2016:

Class	(Taxable) Wages	(Taxable) Vacation	H & W	Pension	Trng/Appr	LECET	SAFE		Total
1	$ 24.14	$ 2.20	$ 7.65	$ 6.75	$ 0.32	$ 0.08	$ 0.15	.....	$ 41.29
2	$ 24.24	$ 2.20	$ 7.65	$ 6.75	$ 0.32	$ 0.08	$ 0.15	.....	$ 41.39
3	$ 24.54	$ 2.20	$ 7.65	$ 6.75	$ 0.32	$ 0.08	$ 0.15	.....	$ 41.69
4	$ 24.84	$ 2.20	$ 7.65	$ 6.75	$ 0.32	$ 0.08	$ 0.15	.....	$ 41.99
5	$ 21.79	$ 2.20	$ 7.65	$ 6.75	$ 0.32	$ 0.08	$ 0.15	.....	$ 38.94

Example: Apprentice at 80% of Class 1 ONLY

Class 1	$ 19.31	$ 2.20	$ 7.65	$ 6.75	$ 0.32	$ 0.08	$ 0.15	.....	$ 36.46

Foreman/Leadman $1.50 above highest classification employed in.

Effective May 1, 2016 - $1.25 increase per hour

*** Vacation is a taxable wage and shall be paid for all hours worked and at 1 1/2 or 2 times the hourly rate when overtime is worked.

"All" Fringes are to be sent to :

Minnesota Laborers' Fringe Benefits Fund
P. O. Box 124
Minneapolis, MN 55440-0124
(651) 256-1800

HIGHWAY HEAVY WAGE RATES

District 2A - Duluth Local #1091

Effective May 1, 2016:

Class	(Taxable) Wages	(Taxable) Vacation	H & W	Pension	Trng/Appr	LECET	FCF		Total
1	$ 29.23	$ 2.30	$ 7.65	$ 6.75	$ 0.32	$ 0.08	$ 0.02	.....	$ 46.35
2	$ 29.43	$ 2.30	$ 7.65	$ 6.75	$ 0.32	$ 0.08	$ 0.02	.....	$ 46.55
3	$ 29.58	$ 2.30	$ 7.65	$ 6.75	$ 0.32	$ 0.08	$ 0.02	.....	$ 46.70
4	$ 29.68	$ 2.30	$ 7.65	$ 6.75	$ 0.32	$ 0.08	$ 0.02	.....	$ 46.80
5	$ 29.93	$ 2.30	$ 7.65	$ 6.75	$ 0.32	$ 0.08	$ 0.02	.....	$ 47.05
6	$ 31.73	$ 2.30	$ 7.65	$ 6.75	$ 0.32	$ 0.08	$ 0.02	.....	$ 48.85
7	$ 25.68	$ 2.30	$ 7.65	$ 6.50	$ 0.32	$ 0.08	$ 0.02	.....	$ 42.55

Example: Apprentice at 80% of Class 1 ONLY

Class 1	$ 23.30	$ 2.30	$ 7.65	$ 6.75	$ 0.32	$ 0.08	$ 0.02	.....	$ 40.42

Pipelayer, Laser Beam (sewer, water, gas) Classification 6 rate.
Foreman/Leadman $1.50 above highest classification employed in.
General Foreman $2.25 above Foreman scale (appointed at employers discretion).

*** Vacation is a taxable fringe and part of the gross wage, it shall be paid for all hours worked and at 1 1/2 or 2 times the hourly rate when overtime is worked

"All" Fringes are to be sent to :

Minnesota Laborers' Fringe Benefits Fund
P. O. Box 124
Minneapolis, MN 55440-0124
(651) 256-1800

NORTH CENTRAL STATES Regional Council of CARPENTERS

LOCAL 1348 MILLWRIGHT AGREEMENT

NORTHERN MINNESOTA

MILLWRIGHTS & MACHINE ERECTOR WAGE RATES

Effective May 3, 2015

Classification		Percent (%)	Gross Wages	Deductions: Savings	Deductions: Dues	Fringe Benefits: Health	Fringe Benefits: DB Pension	Fringe Benefits: DC Pension	Fringe Benefits: Apprentice/ Education	Fringe Benefits: Industry Promo Fund	Total Package
General Foreman	F + $1.75	100%	$36.57	-$3.50	$1.46	$6.33	$5.90	$1.90	$0.60	$0.05	$51.35
Foreman	JP + $2.25	100%	$34.82	-$3.50	$1.39	$6.33	$5.90	$1.90	$0.60	$0.05	$49.60
Journeyperson		100%	$32.57	-$3.50	$1.30	$6.33	$5.90	$1.90	$0.60	$0.05	$47.35
Apprentice	6001-7000	95%	$30.94	-$3.50	$1.24	$6.33	$5.90	$1.90	$0.60	$0.05	$45.72
	5001-6000	90%	$29.31	-$3.50	$1.17	$6.33	$5.90	$1.90	$0.60	$0.05	$44.09
	4001-5000	85%	$27.68	-$3.50	$1.11	$6.33	$5.90	$1.90	$0.60	$0.05	$42.46
	3001-4000	80%	$26.06	-$3.50	$1.04	$6.33	$5.90	$1.90	$0.60	$0.05	$40.84
	2001-3000	75%	$24.43	-$3.50	$0.98	$6.33	$5.90	$1.90	$0.60	$0.05	$39.21
	1001-2000	70%	$22.80	-$3.50	$0.91	$6.33	$5.90	$1.90	$0.60	$0.05	$37.58
	0 - 1000	65%	$21.17	-$3.50	$0.85	$6.33	$5.90	$1.90	$0.60	$0.05	$35.95

Covering the following Counties in the State of Minnesota, Aitkin, Becker, Beltrami, Carlton, Cass, Clearwater, Cook, Lake, Crow Wing, Hubbard, Itasca, Kittson, Koochiching, Lake of the Woods, Manomen, Marshall, Norman, Otter Tail, Pennington, Red Lake , Roseau, St. Louis, Wadena, Wilkin and that part of Clay County outside of a 5 mile radius of Moorhead and that part of Polk County outside of a 5 mile radius of East Grand Forks. In Wisconsin the County of Douglas and that portion of Bayfield County west of Highway 63, and west of a line drawn between Drummond and Herbster and the Lake Superior shore, including the cities of Drummond and Herbster.

May 1, 2016 Increase: $1.75 Allocation TBD **May 7, 2017 Increase: $1.85 Allocation TBD**

INTERNATIONAL UNION OF OPERATING ENGINEERS, LOCAL NO. 49
RATES FOR THE:

BUILDERS AGREEMENT – MINNESOTA

WAGES EFFECTIVE MAY 1, 2016 - ZONE 1

Group	Wages	2% of Gross Wages Excluding Fringes	H&W	HRA	Pension	Appren-ticeship Training	Total	FCF $.02***	"Voluntary" **NOT** Included In Total Pkg C.A.F. $.04**
1	$39.14	*	$9.10	$.50	$8.30	$.50	$57.54	$.02	$.04
2	$38.80	*	$9.10	$.50	$8.30	$.50	$57.20	$.02	$.04
3	$37.39	*	$9.10	$.50	$8.30	$.50	$55.79	$.02	$.04
4	$37.05	*	$9.10	$.50	$8.30	$.50	$55.45	$.02	$.04
5	$36.13	*	$9.10	$.50	$8.30	$.50	$54.53	$.02	$.04
6	$34.62	*	$9.10	$.50	$8.30	$.50	$53.02	$.02	$.04
7	$33.50	*	$9.10	$.50	$8.30	$.50	$51.90	$.02	$.04
8	$31.49	*	$9.10	$.50	$8.30	$.50	$49.89	$.02	$.04

WAGES EFFECTIVE MAY 1, 2016 - ZONE 2

Group	Wages	2% of Gross Wages Excluding Fringes	H&W	HRA	Pension	Appren-ticeship Training	Total	FCF $.02***	"Voluntary" **NOT** Included In Total Pkg C.A.F. $.04**
1	$37.25	*	$9.10	$.50	$8.30	$.50	$55.65	$.02	$.04
2	$36.93	*	$9.10	$.50	$8.30	$.50	$55.33	$.02	$.04
3	$35.60	*	$9.10	$.50	$8.30	$.50	$54.00	$.02	$.04
4	$35.28	*	$9.10	$.50	$8.30	$.50	$53.68	$.02	$.04
5	$34.37	*	$9.10	$.50	$8.30	$.50	$52.77	$.02	$.04
6	$32.95	*	$9.10	$.50	$8.30	$.50	$51.35	$.02	$.04
7	$31.89	*	$9.10	$.50	$8.30	$.50	$50.29	$.02	$.04
8	$30.00	*	$9.10	$.50	$8.30	$.50	$48.40	$.02	$.04

INTERNATIONAL UNION OF OPERATING ENGINEERS, LOCAL No. 49
FOR THE:

HIGHWAY AND HEAVY WAGES EFFECTIVE MAY 1, 2016

EASTERN METROPOLITAN ZONE-(ZONE 1)

Group	Wages	1 ½% of Gross Wages Excluding Fringes	H/W	HRA	Pension	Appren.	Totals	FCF $.02	"Voluntary" **NOT** Incl. in total Pkg IPF $.04
1	$35.39	**	$9.10	$1.00	$8.30	$.50	$54.29	$.02	$.04
2	34.39	**	9.10	1.00	8.30	.50	53.29	.02	.04
3	33.84	**	9.10	1.00	8.30	.50	52.74	.02	.04
4	33.54	**	9.10	1.00	8.30	.50	52.44	.02	.04
5	30.50	**	9.10	1.00	8.30	.50	49.40	.02	.04
6	29.29	**	9.10	1.00	8.30	.50	48.19	.02	.04

REMAINDER OF EASTERN ZONE-(ZONE 2)

Group	Wages	1 ½% of Gross Wages Excluding Fringes	H/W	HRA	Pension	Appren.	Totals	FCF $.02	"Voluntary" **NOT** Incl. in total Pkg IPF $.04
1	$32.73	**	$9.10	$1.00	$8.30	$.50	$51.63	$.02	$.04
2	31.73	**	9.10	1.00	8.30	.50	50.63	.02	.04
3	31.28	**	9.10	1.00	8.30	.50	50.18	.02	.04
4	30.98	**	9.10	1.00	8.30	.50	49.88	.02	.04
5	28.41	**	9.10	1.00	8.30	.50	47.31	.02	.04
6	27.54	**	9.10	1.00	8.30	.50	46.44	.02	.04

WESTERN ZONE-(ZONE 3)

Group	Wages	1 ½% of Gross Wages Excluding Fringes	H/W	HRA	Pension	Appren.	Totals	FCF $.02	"Voluntary" **NOT** Incl. in total Pkg IPF $.04
1	$27.35	**	$9.10	$1.00	$8.30	$.50	$46.25	$.02	$.04
2	26.35	**	9.10	1.00	8.30	.50	45.25	.02	.04
3	25.42	**	9.10	1.00	8.30	.50	44.32	.02	.04
4	25.11	**	9.10	1.00	8.30	.50	44.01	.02	.04
5	23.40	**	9.10	1.00	8.30	.50	42.30	.02	.04
6	22.80	**	9.10	1.00	8.30	.50	41.70	.02	.04

Local 106 Painters & Drywall Wage Rates
Effective May 2, 2016

Journeyperson Wage Rates:

Res., Comm. & Indus. Repaint	Base	Health & Welfare	Pension	Annuity	FTI/UM	FTI/NT'L	FCF	LMCI	MPWEA	STAR	DC82/FCF	**Total**	Vac *	Check-off Dues**
Class I	$28.36	$7.20	$5.40	$3.75	$0.37	$0.10	$0.01	$0.10	$0.03	$ 0.10	$0.01	$45.43	$2.95	$1.79
Class II	$28.96	$7.20	$5.40	$3.75	$0.37	$0.10	$0.01	$0.10	$0.03	$ 0.10	$0.01	$46.03	$2.95	$1.81

New Comm. & New Indus.	Base	Health & Welfare	Pension	Annuity	FTI/UM	FTI/NT'L	FCF	LMCI	MPWEA	STAR	DC82/FCF	**Total**	Vac *	Check-off Dues**
Class I	$29.86	$7.20	$5.40	$3.75	$0.37	$0.10	$0.01	$0.10	$0.03	$ 0.10	$0.01	$46.93	$2.95	$1.84
Class II	$30.46	$7.20	$5.40	$3.75	$0.37	$0.10	$0.01	$0.10	$0.03	$ 0.10	$0.01	$47.53	$2.95	$1.86

Foremen in charge of five (5) or more journeypersons shall be paid $1.00 per hour over the journeyperson rate.

Fair Contracting Foundation: $0.01 paid by employer, $0.01 paid by employee from Total Package.

Painter Apprentice

Hours	**%**	Base	Health & Welfare	Pension	Annuity	FTI/UM	FTI/NT'L	FCF	LMCI	MPWEA	STAR	DC82/FCF	**Total**	Vac *	Check-off Dues**
0-1000	50	$14.93	$7.20	$5.40	$3.75	$0.37	$0.10	$0.01	$0.10	$0.03	$ 0.10	$0.01	$32.00	$2.95	$1.32
1001-2000	55	$16.42	$7.20	$5.40	$3.75	$0.37	$0.10	$0.01	$0.10	$0.03	$ 0.10	$0.01	$33.49	$2.95	$1.37
2001-3000	60	$17.92	$7.20	$5.40	$3.75	$0.37	$0.10	$0.01	$0.10	$0.03	$ 0.10	$0.01	$34.99	$2.95	$1.42
3001-4000	70	$20.90	$7.20	$5.40	$3.75	$0.37	$0.10	$0.01	$0.10	$0.03	$ 0.10	$0.01	$37.97	$2.95	$1.53
4001-5000	80	$23.89	$7.20	$5.40	$3.75	$0.37	$0.10	$0.01	$0.10	$0.03	$ 0.10	$0.01	$40.96	$2.95	$1.63
5001-6000	90	$26.87	$7.20	$5.40	$3.75	$0.37	$0.10	$0.01	$0.10	$0.03	$ 0.10	$0.01	$43.94	$2.95	$1.74

Drywall Taper Appr

Hours	**%**	Base	Health & Welfare	Pension	Annuity	FTI/UM	FTI/NT'L	FCF	LMCI	MPWEA	STAR	DC82/FCF	**Total**	Vac *	Check-off Dues**
0-500	50	$15.23	$7.20	$5.40	$3.75	$0.37	$0.10	$0.01	$0.10	$0.03	$ 0.10	$0.01	$32.30	$2.95	$1.33
501-1000	60	$18.28	$7.20	$5.40	$3.75	$0.37	$0.10	$0.01	$0.10	$0.03	$ 0.10	$0.01	$35.35	$2.95	$1.44
1001-1500	70	$21.32	$7.20	$5.40	$3.75	$0.37	$0.10	$0.01	$0.10	$0.03	$ 0.10	$0.01	$38.39	$2.95	$1.54
1501-2000	75	$22.85	$7.20	$5.40	$3.75	$0.37	$0.10	$0.01	$0.10	$0.03	$ 0.10	$0.01	$39.92	$2.95	$1.60
2001-2500	80	$24.37	$7.20	$5.40	$3.75	$0.37	$0.10	$0.01	$0.10	$0.03	$ 0.10	$0.01	$41.44	$2.95	$1.65
2501-3000	85	$25.89	$7.20	$5.40	$3.75	$0.37	$0.10	$0.01	$0.10	$0.03	$ 0.10	$0.01	$42.96	$2.95	$1.70
3001-3500	90	$27.41	$7.20	$5.40	$3.75	$0.37	$0.10	$0.01	$0.10	$0.03	$ 0.10	$0.01	$44.48	$2.95	$1.76
3501-4000	95	$28.94	$7.20	$5.40	$3.75	$0.37	$0.10	$0.01	$0.10	$0.03	$ 0.10	$0.01	$46.01	$2.95	$1.81

*This Vacation Contribution is included in the taxable wage listed above, then deducted and remitted along with your Health & Welfare contribution.

PLUMBERS & STEAMFITTERS LOCAL #11

4402 AIRPARK BLVD.
DULUTH, MN 55811

JEFFREY DAVEAU SR.
BUSINESS MANAGER

218-727-2199 PHONE
218-727-2298 FAX

WAGE & BENEFIT REVISION EFFECTIVE MAY 2, 2016

BUILDING TRADES JOURNEYMAN

Base Pay	**$35.69**
Savings Fund	2.00
Dues Check off	.96
Building Fund	.20
Organizing Fund	.15
UA-PEC	.05
Local PAC	.01
Death Assessment	.01
Total Taxable	**$39.07**

Fringes	
Health & welfare	7.20
H R Fund	.15
Local Pension	6.25
National Pension	.78
Money Purchase	3.50
Training Fund	.50
International Training Fund	.10
Industry Fund	.35
H.V.A.C	.25
Total Fringes	**$19.08**
Total package	**$58.15**

Foreman $2.50 over Base Pay
General Foreman $3.50 over Base Pay

WAGES AS OF 5-2-2016	JOURNEYMAN	95%	90%	85%	80%	75%	70%
TAXABLE		⬇	⬇	⬇	⬇	⬇	⬇
BASE PAY	$ 35.69	$ 33.91	$ 32.12	$ 30.34	$ 28.55	$ 26.77	$ 24.98
SAVINGS FUND	$ 2.00	$ 1.90	$ 1.80	$ 1.70	$ 1.60	$ 1.50	$ 1.40
UNION DUES & ASSESSMENTS	$ 1.38	$ 1.38	$ 1.38	$ 1.38	$ 1.38	$ 1.38	$ 1.38
TOTAL TAXABLE	$ 39.07	$ 37.19	$ 35.30	$ 33.42	$ 31.53	$ 29.65	$ 27.76
FRINGES							
TRAINING FUND	$ 0.50	$ 0.50	$ 0.50	$ 0.50	$ 0.50	$ 0.50	$ 0.50
H R FUND	$ 0.15	$ 0.15	$ 0.15	$ 0.15	$ 0.15	$ 0.15	$ 0.15
HVAC	$ 0.25	$ 0.25	$ 0.25	$ 0.25	$ 0.25	$ 0.25	$ 0.25
UA TRAINING FUND	$ 0.10	$ 0.10	$ 0.10	$ 0.10	$ 0.10	$ 0.10	$ 0.10
HEALTH & WELFARE	$ 7.20	$ 7.20	$ 7.20	$ 7.20	$ 7.20	$ 7.20	$ 7.20
UA PENSION	$ 0.78	$ -	$ -	$ -	$ -	$ -	$ -
LOCAL PENSION	$ 6.25	$ 6.25	$ 6.25	$ 6.25	$ 6.25	$ 6.25	$ 6.25
MONEY PURCHASE	$ 3.50	$ 3.33	$ 3.15	$ 2.98	$ 2.80	$ 2.63	$ 2.45
INDUSTRY DEVELOPMENT	$ 0.35	$ 0.35	$ 0.35	$ 0.35	$ 0.35	$ 0.35	$ 0.35
TOTAL FRINGES	$ 19.08	$ 18.13	$ 17.95	$ 17.78	$ 17.60	$ 17.43	$ 17.25
TOTAL PACKAGE	$ 58.15	$ 55.32	$ 53.25	$ 51.20	$ 49.13	$ 47.08	$ 45.01

WAGES AS OF 5-2-2016	65%	60%	55%	50%	45%	40%	
TAXABLE	⬇	⬇	⬇	⬇	⬇	⬇	
BASE PAY	$ 23.20	$ 21.41	$ 19.63	$ 17.85	$ 16.06	$ 14.28	
SAVINGS FUND	$ 1.30	$ 1.20	$ 1.10	$ 1.00	$ 0.90	$ 0.80	
UNION DUES AND ASSESSMENTS	$ 1.38	$ 1.38	$ 1.38	$ 1.38	$ 1.38	$ 1.38	
TOTAL TAXABLE	$ 25.88	$ 23.99	$ 22.11	$ 20.23	$ 18.34	$ 16.46	
FRINGES							
TRAINING FUND	$ 0.50	$ 0.50	$ 0.50	$ 0.50	$ 0.50	$ 0.50	
HR FUND	$ 0.15	$ 0.15	$ 0.15	$ 0.15	$ 0.15	$ 0.15	
HVAC	$ 0.25	$ 0.25	$ 0.25	$ 0.25	$ 0.25	$ 0.25	
UA TRAINING FUND	$ 0.10	$ 0.10	$ 0.10	$ 0.10	$ 0.10	$ 0.10	
HEALTH & WELFARE	$ 7.20	$ 7.20	$ 7.20	$ 7.20	$ 7.20	$ 7.20	
UA PENSION	$ -	$ -	$ -	$ -	$ -	$ -	
LOCAL PENSION	$ 6.25	$ 6.25	$ 6.25	$ 6.25	$ 6.25	$ 6.25	
MONEY PURCHASE	$ 2.28	$ -	$ -	$ -	$ -	$ -	
INDUSTRY DEVELOPMENT	$ 0.35	$ 0.35	$ 0.35	$ 0.35	$ 0.35	$ 0.35	
TOTAL FRINGES	$ 17.08	$ 14.80	$ 14.80	$ 14.80	$ 14.80	$ 14.80	
TOTAL PACKAGE	$ 42.96	$ 38.79	$ 36.91	$ 35.03	$ 33.14	$ 31.26	

WAGE BREAKDOWN FOR LOCAL UNION # 11 APPRENTICES - BEGINNING MAY 2, 2016

Wages/Benefits Roofers Local Union 96 - Duluth Area

Effective July 1, 2016

Through June 30, 2017

Classification		Basic Hourly Wage	Vac. After Taxes	Assess. After Taxes	Taxable Wage Rate	National Pension Rate	Educ Fund Rate	Annuity Fund Rate	Health/ Welfare Rate	H&W HRA Rate	Appr. Training Rate	Roofing Industry Rate	Total Cost to Employer
Journeyman		30.00	2.50	0.50	33.00	3.55	0.03	3.09	7.60	0.50	0.35	0.30	48.42
Foreman		32.00	2.50	0.50	35.00	3.80	0.03	3.09	7.60	0.50	0.35	0.30	50.67
Apprentice Percentages Based on Hours Worked for Advancement:													
55%	A 0-250	17.75		0.40	18.15	0.25	0.03				0.35	0.30	19.08
55%	B 251-1500	17.75		0.40	18.15	0.25	0.03		6.00		0.35	0.30	25.08
60%	1501-2500	19.30		0.50	19.80	0.25	0.03	0.25	7.00		0.35	0.30	27.98
Freeze Unless 144 Hours (Phase 1) of Related Training is Completed													
65%	2501-3000	20.95		0.50	21.45	0.50	0.03	0.50	7.60	0.50	0.35	0.30	31.23
70%	3001-3500	22.60		0.50	23.10	0.50	0.03	0.50	7.60	0.50	0.35	0.30	32.88
75%	3501-4000	24.25		0.50	24.75	0.50	0.03	0.50	7.60	0.50	0.35	0.30	34.53
80%	4001-4500	23.40	2.50	0.50	26.40	0.75	0.03	0.75	7.60	0.50	0.35	0.30	36.68
Freeze Unless 288 Hours (Phase 2) of Related Training is Completed													
85%	4501-5000	25.05	2.50	0.50	28.05	0.75	0.03	0.75	7.60	0.50	0.35	0.30	38.33
90%	5001-5500	26.70	2.50	0.50	29.70	1.00	0.03	0.75	7.60	0.50	0.35	0.30	40.23
95%	5501-6000	28.35	2.50	0.50	31.35	1.00	0.03	0.75	7.60	0.50	0.35	0.30	41.88

Advancement to Journeyman if All Related Training (Phase 3) is Completed and **6000** Hours Worked

Due:		
	July 1, 2017:	$1.30
	July 1, 2018:	$1.30
	July 1, 2019:	$1.40
	July 1, 2020:	$1.40

Expiration date: June 30, 2021

DULUTH
COMMERCIAL & INDUSTRIAL
SHEET METAL WAGE RATES

EFFECTIVE MAY 2, 2016 - April 30, 2017

SOUTHERN ST. LOUIS, AITKIN, CARLTON, LAKE, COOK, AND DOUGLAS COUNTIES

			TAXABLE BASE*	SASMI	Health Fund	NATL PENSION	SUPP. PENSION	LOCAL 10 PENSION	FCF & LOCAL T.F.	SMOHI NEMI & ITI	LOCAL I.F. & DRUG TESTING	TOTAL PACKAGE
Journeyman			$31.87	$1.65	$9.27	$11.18	$2.37	$0.45	$0.64	$0.17	$0.23	$57.83
Foreman			33.87	1.65	9.27	11.18	2.37	0.45	0.64	0.17	0.23	59.83
General Foreman			35.87	1.65	9.27	11.18	2.37	0.45	0.64	0.17	0.23	61.83
Apprentice	HOURS											
	0-1000	55	17.53	1.04	9.27	6.15	1.30	0.25	0.64	0.17	0.23	36.58
	1001-2000	59	18.80	1.09	9.27	6.60	1.40	0.27	0.64	0.17	0.23	38.47
	2001-3000	63	20.08	1.14	9.27	7.04	1.49	0.28	0.64	0.17	0.23	40.34
	3001-4000	68	21.67	1.21	9.27	7.60	1.61	0.31	0.64	0.17	0.23	42.71
	4001-5000	72	22.95	1.27	9.27	8.05	1.71	0.32	0.64	0.17	0.23	44.61
	5001-6000	76	24.22	1.32	9.27	8.50	1.80	0.34	0.64	0.17	0.23	46.49
	6001-7000	80	25.50	1.38	9.27	8.94	1.90	0.36	0.64	0.17	0.23	48.39
	7001-8000	84	26.77	1.43	9.27	9.39	1.99	0.38	0.64	0.17	0.23	50.27
Classified worker												
	0-500	45	14.17	0.00	0.00	0.00	0.00	0.00	0.64	0.17	0.00	14.98
Plan B Single	501-on	45	14.17	0.00	3.09	2.62	0.00	0.00	0.64	0.17	0.00	20.69
Plan B Family	501-on	45	10.12	0.00	7.14	2.62	0.00	0.00	0.64	0.17	0.00	20.69

*The Taxable Base Pay rate includes $2.58 Vacation and Organizing deduction for journeymen and $1.58 for apprentices. The Vacation Fund deduction is $2.00 per hour for journeymen ($1.00 per hour for apprentices) and $.58 per hour for Organizing for both Journeymen and apprentices. For classified workers, the Vacation Fund deduction is $.55 per hour and there is a $.23 deduction for Organizing for a total deduction of $.78.

SASMI NOTE: The SASMI rate for Foreman and General Foreman are the same as the rate for Journeymen and there is no longer a different SASMI rate for overtime hours on any classification. All SASMI hours are paid at the straight time rate.

Effective May 1, 2017, these will be a $1.65 total package increase and on April 30, 2018 these will be a $1.75 total package increase. The fringe benefit allocation will be made at those times.

The current IRS mileage rate is $.54

May 6, 2016 Contract expires April 28, 2019

Shawn Broadrick
Business Manager

Brian W. Dunn
Financial Secretary Treasurer

James E. Tucker
President-Organizer

SPRINKLER FITTERS

Minnesota Breakdown of Wage and Benefit Package

Wage Rate	4/1/16	4/1/17	4/1/18	4/1/19	4/1/20
	$35.08	$36.33	$37.58	TBD	TBD

Foreman's Rate: $2.75 above journeyman scale
General Foreman: $5.00 above journeyman scale (22+ men on job)
Local Union 669 has a 5% dues check-off; 2 1/2% for Apprentices Class 1-4

Payroll Deduction:

Extended Benefit Fund: $.25 per hour for all hours worked payable to Local Union 669

Industry Advancement-State of Minnesota

Class 5 and higher $.25 per hour for all hours worked payable to Local Union 669

Benefit Package

Health & Welfare 4/1/16	$8.77	per hour for all hours worked
Health & Welfare 1/1/17	$9.17	per hour for all hours worked
Health & Welfare 1/1/18	$9.67	per hour for all hours worked
Health & Welfare 1/1/19	$10.02	per hour for all hours worked
Health & Welfare 1/1/20	TBD	
Health & Welfare 1/1/21	TBD	
Pension 4/1/16	$6.05	per hour for all hours worked
Pension 1/1/17	$6.20	per hour for all hours worked
Pension 1/1/18	$6.40	per hour for all hours worked
Pension 1/1/19	$6.60	per hour for all hours worked
Pension 1/1/20	TBD	
Pension 1/1/21	TBD	
Education 4/1/16	$ .35	per hour for all hours worked
Education 4/1/17	$ .37	per hour for all hours worked
Education 4/1/18	$ .42	per hour for all hours worked
International Training Fund 4/1/16	$ .10	per hour for all hours worked
Industry Promotion 4/1/16	$ .25	per hour for all hours worked
Supplemental Pension 4/1/16	$2.50	per hour for all hours worked
Supplemental Pension 4/1/17	$2.65	per hour for all hours worked
Supplemental Pension 4/1/18	$2.90	per hour for all hours worked
Supplemental Pension 4/1/19	TBD	
Supplemental Pension 4/1/20	TBD	

Travel Expenses	4/1/16	1/1/17	1/1/18	1/1/19
0-60 miles	No expenses	No expenses	No expenses	No expenses
60-80 miles	$17.50	$19.00	$19.00	$19.00
80-100 miles	$27.50	$29.00	$29.00	$29.00
100+ miles	$80.00	$90.00	$100.00	$105.00

If you should have any additional questions, please feel free to contact Business Agent James Westby at (507) 493-5671 or this office.

Created May 2016

Road Sprinkler Fitters Local Union No. 669
7050 Oakland Mills Road • Suite 200 • Columbia, Maryland 21046
(410) 381-4300 • fax: (301) 621-8045 • www.sprinklerfitters669.org

SCHEDULE 9 - SUNDAY AND HOLIDAYS

A. All work performed between midnight Saturday night and midnight Sunday night shall be classed as Sunday work and paid for at the rate of two (2) times the regular hourly rate; except as a regular shift which ends on Sunday or a holiday morning or begins at or after 6:00 p.m. on a Sunday or a holiday evening, shall be paid at the straight time rate.

B. Work performed on Sundays and the following holidays shall be compensated for at the rate of two (2) times the regular hourly rate: New Years Day, Memorial Day, Independence Day, Labor Day, Thanksgiving Day and Christmas Day. When Monday is designated and celebrated as one of the above listed legal holidays according to the regulations produced by the Federal government, they shall be observed as such.

DULUTH, SUPERIOR, AND IRON RANGE CONTRACTORS/BUILDERS SUPPLEMENTS - LOCAL 346

SCHEDULE 1 - CLASSIFICATIONS AND WAGES

Classifications:

GROUP 1
Boom Truck Operator

GROUP 2
Ready-Mix Driver
Tractor-Trailer Driver

GROUP 3
Driver and Warehouseman Foreman
Mechanic (where required)
Fork Lift Operator
Tandem or 3 Axle Truck Driver

GROUP 4
Warehouseman
Farm Tractor Driver
Single or 2 Axle Truck Driver
Dumpman

May 1, 2014

Group	Wages	Health & Welfare	Pension
1	$26.60	$ 7.95	$ 5.55
2	$26.05	$ 7.95	$ 5.55
3	$25.85	$ 7.95	$ 5.55
4	$25.60	$ 7.95	$ 5.55

Boom Truck Operator to receive an additional 50¢ increase 1st and 2nd year above the current rate in effect.

May 1, 2015

Group	Wages	Health & Welfare	Pension
1	$27.10	$ 8.15	$ 6.30
2	$26.55	$ 8.15	$ 6.30
3	$26.35	$ 8.15	$ 6.30
4	$26.10	$ 8.15	$ 6.30

May 1, 2016

Group	Wages	Health & Welfare	Pension
1	$27.75	$ 8.35	$ 6.90
2	$27.20	$ 8.35	$ 6.90
3	$27.00	$ 8.35	$ 6.90
4	$26.75	$ 8.35	$ 6.90

All monies negotiated into the benefits will be used only as needed.

Note A: When a contractor deems it advisable to hire an Apprentice Mechanic, his scale shall be as follows:

1st Year: 70% of Class 1 scale
2nd Year: 85% of Class 1 scale
After second full year, 100% of Class 1 scale

Health & Welfare and Pension paid to Minnesota Teamsters Construction Division Fringe Benefit Funds, c/o Zenith Administrators, P.O. Box 31, Minneapolis, Minnesota 55440-

INDEX TO DIVISION SB

Section No.	Item	Page No.
SB-1	DEFINITIONS AND PROJECT DESCRIPTION	1
SB-2	(1706) EMPLOYEE HEALTH AND WELFARE	1
SB-3	(1717) AIR, LAND AND WATER POLLUTION	2
SB-4	(2401) CONCRETE BRIDGE CONSTRUCTION	2
SB-5	(2411) CONCRETE CULVERT REPAIR	5
SB-6	(2403) TIMBER BRIDGE CONSTRUCTION	7
SB-7	(2403) TIMBER BRIDGE DECK	7
SB-8	(2403) TIMBER LEAD-IN RAILING	12
SB-9	(2433) REMOVE REGULATED WASTE MATERIAL (BRIDGE) (TRESTLE)	14
SB-10	(2557) TRAIL GATE, TYPE SPECIAL	19
SB-11	(2564) DELINEATOR, TYPE SPECIAL	20

DIVISION SB

SB-1 DEFINITIONS AND PROJECT DESCRIPTION

Project Description: The base portion of this project involves the rehabilitation of the Stewart Creek Bridge and removal of a dilapidated timber trestle bridge, both of which are bridges on the DWP Trail in Duluth, MN. Add/alternate bid items include DWP Trail grading improvements at the site of the timber trestle bridge as well as the rehabilitation of an existing concrete culvert under the DWP Trail and located just east of the Stewart Creek Bridge. Project work involves the removal and disposal of the existing treated deck material and railings on both the Stewart Creek Bridge and the timber trestle, repairs to the concrete footings/pedestals supporting the Stewart Creek Bridge, and constructing a new deck and railing system on the bridge.

The first add/alternate item includes grading work on the DWP Trail in each direction from the location of the timber trestle bridge being demolished as a part of the base bid. The additional grading may be beneficial to create access to the Stewart Creek Bridge from the west side for constructing the deck and rail improvements, and is meant to restore trail grades to ABA-compliant slopes once the timber trestle has been demolished. The second add/alternate item includes rehabilitating an existing concrete culvert under the DWP Trail by bypassing stream flows to allow for cleaning debris from the floor of the culvert and placing a concrete overlay in its floor.

Accept or Acceptance: Formal conditional determination in writing by MN DOT or Local Bridge Owner that a particular matter or item appears to meet the requirements of the Contract Documents.

Approve or Approval: Formal conditional determination in writing by MN DOT or Local Bridge Owner that a particular matter or item is good or satisfactory for the Project. Such determination may be based on requirements beyond those set forth in the Contract Documents without payment of additional compensation or a time extension and may reflect preferences of MN DOT or Local Bridge Owner.

SB-2 (1706) EMPLOYEE HEALTH AND WELFARE

The provisions of MN DOT 1706 are supplemented as follows:

The Contractor shall submit a plan, at the preconstruction conference, for providing all OSHA required safety equipment (safety nets, static lines, false decks, etc.) for all work areas whose working surface is 1.8 meters (**6 feet**) or more above the ground, water, or other surfaces. Submittal of this plan will in no way relieve the Contractor of his/her responsibility for providing a safe working area.

All safety equipment, in accordance with the Contractor's plan, must be in place and operable in adequate time to allow City’s representative to perform their required inspection

duties at the appropriate time. No concrete shall be placed in any areas affected by such required inspection until the inspection has been completed.

The installation of safety lines, safety nets, or other systems whose purpose is to reduce the hazards of bridge work may require the attachment of anchorage devices to beams, girders, diaphragms, bracing or other components of the structure. Clamp type anchorage systems which do not require modification of structural members may be used provided they do not interfere with proper execution of the work; however, if the Contractor desires to use an anchorage system which requires modification of structural members, s/he shall request approval, in writing, for plan modification as provided in MN DOT Specifications. Requests to install systems which require field welding or drilling of primary stress carrying members of a bridge will not be approved. The Contractor shall indicate any portions of anchorage devices which will remain permanently in the structure.

Approved anchorage systems shall be furnished, installed, and removed at no increased cost to the City for materials, fabrication, erection, or removal of the bridge component or anchorage system.

SB-3 (1717) AIR, LAND AND WATER POLLUTION

The provisions of 1717 are supplemented as follows:

Unless otherwise provided in these special provisions, construction, demolition and/or removal operations conducted over or in the vicinity of public waters shall be so controlled as to prevent materials from falling into the water. Any materials which do fall into the water, or onto areas where there is a likelihood that they will be picked up by rising water levels, shall be retrieved and stored in areas where such likelihood does not exist.

SB-4 (2401) CONCRETE BRIDGE CONSTRUCTION

The provisions of MN DOT 2401 are modified and/or supplemented with the following:

SB-4.1 Description of Work

This item includes all work and materials to repair the concrete pedestals as shown on the plans. This work includes: removal and disposal of loose concrete; preparation of existing concrete, as per manufacturer’s instructions for epoxy resin; application of epoxy resin for bonding fresh concrete to hardened concrete, supplying and installing forms, reinforcing steel and concrete for concrete shells; excavation, supplying and installing stay-in-place forms and placement of lean mix backfill.

The contractor shall provide all labor, tools, equipment and materials necessary to accomplish the work for these items to be constructed in accordance with the Plans and Specifications.

SB-4.2 Materials

Per MN DOT Specification 2401 and MN DOT Specification 2461 with these modifications/clarifications:

1. Concrete for the Reinforced Concrete Pedestal Repair shall be MN DOT Mix No. 3B52.
2. The reinforcement bars shall be Grade 60 deformed billet steel bars (epoxy coated) per MN DOT Specification 3301.
3. The lean mix backfill shall be as per MN DOT specification 2520.
4. The epoxy resin shall be as per A.S.T.M. C881.

SB-4.3 Construction Requirements

A. Submittals

The Contractor shall submit two copies for approval to the Engineer for the following:

1. Concrete Mix Design 3B52
2. Lean Mix Backfill as per MN DOT specification 2520.
3. Epoxy Resin as per A.S.T.M. C881.

B. Quality Assurance

Ready-mixed concrete:

1. Per MN DOT specification 2461.3
2. Per MN DOT specification 3301

C. Fabrication

Concrete as per MN DOT Specification 2401.

Steel reinforcing as per MN DOT Specification 3301.

Lean mix backfill as per MN DOT Specification 2520.

D. Finishes

Concrete to have ordinary surface finish per MN DOT Specification 2401.

E. Handling and Storage

Concrete as per MN DOT Specification 2401.

Reinforcing steel as per MN DOT Specification 3301.

Lean mix backfill as per MN DOT Specification 2520.

F. Preparation

Owner's Representative must inspect the reinforcing steel upon arrival to the job site.

Per MN DOT Specification 2401. Owner's Representative must inspect the existing concrete, forms, reinforcing steel, etc. before concrete is ordered.

Per MN DOT Specification 2520. Owner's Representative must inspect the subgrade, forms before lean mix backfill is ordered.

G. Installation

Concrete as per MN DOT Specification 2401.

Reinforcing steel as per MN DOT Specification 2401.

Lean mix backfill as per MN DOT Specification 2520.

H. Field Quality Control

Per MN DOT Specification 2401.

I. Repair and Restoration

Materials not meeting the specifications shall be rejected and replaced by the Contractor, or repaired by a method acceptable to the Engineer.

Any existing or new concrete that has been damaged during construction and prior to final acceptance of the project shall be satisfactorily repaired or replaced, at the Contractor's expense, at the discretion of the Engineer.

SB-4.4 Method of Measurement

No measurement will be made of reinforcing steel, concrete, forms, lean mix backfill or other material, but the work shown on the plans, complete in place, shall be construed to be included in the count of each pedestal repair completed.

SB-4.5 Basis of Payment

Payment for Repair Concrete Pedestal will be made on the basis of each pedestal repair completed. This will include all work and materials to repair the concrete pedestals as shown on the plans, including but not limited to: removal and disposal of loose concrete; preparation of existing concrete, as per manufacturer's instructions for epoxy resin; application of epoxy resin for bonding fresh concrete to hardened concrete, supplying and installing forms, reinforcing steel and concrete for concrete shells; excavation, supplying and installing stay-in-place forms and lean mix backfill.

SB-5 (2411) CONCRETE CULVERT REPAIR

The provisions of MN DOT 2411 are modified and/or supplemented with the following:

SB-5.1 Description of Work

This item includes all work and materials to repair the floor of the concrete culvert as shown on the plans. This work includes: removal and disposal of loose concrete; sandblast in-place box culvert floor, supplying and installing epoxy coated rebar, supplying and installing forms, concrete for culvert floor overlay and end walls.

The contractor shall provide all labor, tools, equipment and materials necessary to accomplish the work for these items to be constructed in accordance with the Plans and Specifications.

SB-5.2 Materials

Per MN DOT Specification 2411 and MN DOT Specification 2461 with these modifications/clarifications:

5. Concrete for the Reinforced Concrete Culvert Repair shall be MN DOT Mix No. 3G52.
6. The reinforcement bars shall be Grade 60 deformed billet steel bars (epoxy coated) per MN DOT Specification 3301.

SB-5.3 Construction Requirements

A. Submittals

The Contractor shall submit two copies for approval to the Engineer for the following:

1. Concrete Mix Design 3G52

B. Quality Assurance

Ready-mixed concrete:

1. Per MN DOT specification 2461.3
2. Per MN DOT specification 3301

C. Fabrication

Concrete as per MN DOT Specification 2411.

Steel reinforcing as per MN DOT Specification 3301.

D. Finishes

Concrete to have ordinary surface finish per MN DOT Specification 2401.

E. Handling and Storage

Concrete as per MN DOT Specification 2411.

Reinforcing steel as per MN DOT Specification 3301.

F. Preparation

Owner's Representative must inspect the reinforcing steel upon arrival to the job site.

Per MN DOT Specification 2411. Owner's Representative must inspect the existing concrete, forms, reinforcing steel, etc. before concrete is ordered.

G. Installation

Concrete as per MN DOT Specification 2411.

Reinforcing steel as per MN DOT Specification 2411.

H. Field Quality Control

Per MN DOT Specification 2411.

I. Repair and Restoration

Materials not meeting the specifications shall be rejected and replaced by the Contractor, or repaired by a method acceptable to the Engineer.

Any existing or new concrete that has been damaged during construction and prior to final acceptance of the project shall be satisfactorily repaired or replaced, at the Contractor's expense, at the discretion of the Engineer.

SB-5.4 Method of Measurement

No measurement will be made of reinforcing steel, concrete, forms, but the work shown on the plans, complete in place, shall be construed to be included in the count of each Concrete Floor Overlay completed.

SB-5.5 Basis of Payment

Payment for Concrete Floor Overlay will be made at the Contract prices for Structural Concrete, Grouted Reinforcement Bars, and Culvert Repair-Special as noted in the Plans. These shall be compensation in full for all costs of performing the work described above. This will include all work and materials to place the concrete floor overlay as shown on the plans, including but not limited to: removal and disposal of loose concrete; sandblast in-place box culvert floor, supplying and installing epoxy coated rebar, supplying and installing forms, concrete for culvert floor overlay and end walls.

SB-6 (2403) TIMBER BRIDGE CONSTRUCTION

A. Preservative Treatment

Pressure treat timber after fabrication in accordance with the 2403 and current AWPA commodity standards with copper naphthenate. The treated timber shall be coated with Ecosorb, or equivalent, to address the odor. The Contractor shall submit documentation to the Engineer that certifies the level of treatment of each member and give immediate notice of the delivery of the materials. Materials not meeting the specifications shall be rejected and replaced by the Contractor or repaired by a method acceptable to the Engineer.

SB-7 (2403) TIMBER BRIDGE DECK

SB-7.1 Description of Work

The Timber Bridge Deck includes all work necessary to design, prepare shop drawings, fabrication, delivery, and install a Timber Bridge Deck in accordance with the Plans and Specifications. The Timber Bridge Deck shall be constructed with transverse nail laminated prefabricated timber panels with a minimum thickness as designated on the Plans. Ship lap joints shall be required between the timber panels. The anchorage of railpost to deck shall utilize a horizontal eye bolt, recessed below top of deck with a vertical domehead bolt through deck and railpost block. A treated timber wear surface shall be installed over the prefabricated timber panels. The Contractor shall provide all labor, tools, equipment and materials necessary to accomplish this work.

Bridge Railing includes all work necessary to design, prepare shop drawings, fabrication, delivery, and install a Bridge Railing in accordance with the Plans, Specifications and Manufacturer’s Instructions. The Bridge Railing shall be constructed with steel rail posts and shall support timber rails as well as wire rope cable. The wire rope cable, and its hardware, shall

come as a system and shall be approved by the Engineer before ordering. The Contractor shall provide all labor, tools, equipment and materials necessary to accomplish this work.

SB-7.2 Materials

A. Timber deck and railing shall be per MN DOT 2403 and 3426 with these modifications: Timber deck shall be Douglas Fir No. 1 or better and timber rail shall be Southern Yellow Pine No. 2 or better. Timber shall be pressure treated as described below.

B. Hardware shall be per MN DOT specification 2403.2J.

C. Bituminous mastic shall be per MN DOT specification 3728.

D. All timber shall be pressure treated with copper naphthenate. The treated timber shall be coated with Ecosorb, or equivalent, to address the odor.

Wood shall be pre-cut and/or predrilled prior to treatment whenever possible, otherwise, all field cuts, drillings, notches, etc., in wood over 2” nominal thickness shall be coated with two heavy coats (minimum) of preservative compatible with existing preservative treatment.

E. Steel shall be per MN DOT specification 2402. Structural steel shall conform to ASTM A709, grade 50.

F. Wire rope cable to be 1x19 cable of Type 316 stainless steel.

SB-7.3 Construction Requirements

A. General Design Requirements

General schematic design has been performed to establish the design intent of the bridge deck and bridge railing. The Contractor shall perform design calculations as necessary to confirm the bridge deck and bridge railing member sizes. The design shall be in accordance with the 2014 Edition of the AASHTO LRFD Bridge Design Specifications, all current interims, the 2009 Edition of the AASHTO LRFD Guide Specifications for the Design of Pedestrian Bridges, the MN DOT Bikeway Facility Design Manual, and the MN DOT LRFD Bridge Design Manual.

The bridge deck design shall verify compliance with the recommended deflection prescribed in the AASHTO LRFD Guide Specifications for the Design of Pedestrian Bridges.

1. The bridge deck and bridge railing shall meet the following criteria:

   a. The bridge deck shall have a minimum clear deck width of 12’-0”.
   b. The maximum allowed opening in the rails between the deck surface and a line 27 inches above the deck is 4 inches. Above

27 inches and up to the top of top rail, the maximum allowed opening is 6 inches. The railing height shall be a minimum of 4'-6".

2. The bridge deck and bridge railing design shall meet the minimum design criteria as follows:

a. Vertical: AASHTO pedestrian live load or an H-10 (20,000 pound) maintenance vehicle without impact. Whichever loading combination produces the greater stresses shall govern the design.

b. Horizontal Wind Loading: Wind loads are as specified in *AASHTO Signs*, Articles 3.8 and 3.9. Unless otherwise directed by the Owner, the structure shall have a Wind Importance Factor I_r of 1.15. Apply wind loading over the exposed area in front elevation including enclosures.

c. Vertical Wind Loading: Apply, concurrently with the loading above, a vertical uplift line load equal to 20 psf over the full deck area. This load is applied at the windward quarter point of the deck width.

B. The design and all bridge deck and bridge railing plan sheets shall contain the signature of an Engineer who is currently licensed by the State of Minnesota as a Professional Engineer and experienced in the design of timber bridges.

C. Joint openings at the bridge deck at ends of spans greater than 1/2" will require a steel cover plate. If utilized, the plate shall extend a minimum of 4 inches beyond the opening. The cover plate shall be ADA compliant and be recessed into the top of the timber deck and allow for thermal movement of the steel spans.

D. Bridge Deck Signs: Mark both ends of bridge with a load limit of 10 tons.

E. Care and handling of preservative treated wood products shall be in accordance with AWPA Standard M4.

F. Bridge Deck and Bridge Railing Plan Requirements and Submittals

Bridge Deck and Bridge Railing plans are the certified design plans of the timber deck structure and bridge railing, provided by the contractor, based on the details and performance criteria found in the Design Plan and the following Special Provisions.

1. Plan Preparation

Contractor shall provide timber bridge deck and bridge railing plans that are complete and comprehensive, fully detailing the structure and connections. The plans shall reflect the requirements and intentions of the Final Design Plan and the Special

Provisions. A Professional Engineer licensed in the State of Minnesota and experienced in timber bridge deck and bridge railing design shall certify all plan sheets, as well as the design calculations. All plan sheets shall also contain the initials of the designer, drafter, and checkers.

The plans for the bridge deck and bridge railing shall include, but not be limited to the following;

a. Detailed general plan, elevation, and cross section views on the first sheet/s, providing span lengths. The first sheet shall also include pertinent design data information.

b. Framing plan.

c. Railing details, including installation of wire rope cable.

d. Details of all timber connections and fasteners.

e. Parapet timber details

f. Erection drawings.

2. Plan Submittal and Review Process

Upon completion of the project letting and prior to the start of any fabrication or construction, the contractor shall submit, as described below, two sets of the bridge deck and bridge railing plans and one set of design computations to the owner/owner's consultant for review and acceptance.

Submittals shall be made no later than four weeks after date of notice of Contract Approval. The Contractor shall allow the following time period in his construction schedule: Allow seven calendar days after the first receipt of plans by the owner/owner's consultant for a complete initial review of the design and plans submittal, and an additional seven calendar days for any necessary revisions and/or corrections suggested by the reviewers.

The Plan review process shall consist of the following:

a. The review of the detailed bridge deck and bridge railing plan sheets and design computations shall verify general compliance with the Design Plans and all other information contained in the Special Provisions. The review shall verify that all standard design specifications, manuals and guidelines have been followed.

b. Following the review of the detailed bridge deck and bridge railing plan set and design computations, comments and concerns are returned to the contractor. After comments are addressed and plan corrections are made, the contractor shall submit a revised bridge

deck and bridge railing plan set and design computations for review and acceptance.

c. The final, accepted detailed bridge deck and bridge railing plan set will become the property of the owner. The plans shall be made available to the public.

G. Fabrication

Bridge Deck and Bridge Railing fabrication shall not begin until the detailed plans/shop drawings have been approved by the Engineer. Any work performed prior to the Engineer's approval, is subject to the requirements of MN DOT 1512.

H. Installation

Installation shall be per MN DOT 2403.3, except the construction tolerance for the railing is 3/8” per 8’ of length. Materials not meeting these tolerances are subject to rejection. Any modifications made to correct out of tolerance work will require approval of the Engineer. All costs associated with the repair or replacement of out of tolerance work/materials shall be borne by the Contractor.

Contractor to provide verification that the wire rope railing was installed as per manufacturer’s instructions, including but not limited to, proper tensioning of the wire rope railing.

I. Grounding

The railing shall be grounded. Install all electrical grounding in accordance with the applicable provisions of MN DOT specification 2557 and the National Electrical Code. Clamp or braze the ground wires to the grounding device, then practicably route and attach to the nearest rail by clamping, brazing, or any other approved means that will provide a permanent positive connection. If rail has non-continuous sections, use a #6 AWG solid copper wire to connect adjacent railing panels.

Ground the railing at points directly below or adjacent to the railing at each end of bridge and in locations shown in the plans. The grounding system will consist of a #6 AWG solid copper wire connected to the railing which in turn is connected to a copper coated steel rod having a nominal diameter of 15 mm (**5/8 inch**) or more and a minimum length of 2.4 m (**8 feet**) installed to an elevation approximately flush with the ground surface.

SB-7.4 Method of Measurement

No measurement will be made for the timber bridge deck. Timber bridge railing will be measured by length (feet) based on Plan dimensions.

SB-7.5 Basis of Payment

Payment for Item No. 2403.601 “Timber Bridge Deck” will be made at the Contract price per lump sum and shall be compensation in full for all costs of performing the work described above for designing, producing shop drawings, furnishing and erecting the entire bridge deck superstructure including wear plank timbers, parapet timbers and their fasteners as well as steel plates at joints and their fasteners. Hardware and deviations in member sizes or depths shall be considered incidental to the lump sum price bid for Timber Bridge Deck.

Payment for Item No. 2403.603 “Bridge Railing” will be made at the Contract price per lineal foot, based on the plan quantity, and shall be compensation in full for all costs of performing the work described above for designing, producing shop drawings, furnishing and erecting the entire bridge railing, except for timber lead-in railing, which is provided for elsewhere in the Contract. Hardware and deviations in member sizes or depths shall be considered incidental to the price bid for Bridge Railing.

SB-8 (2403) TIMBER LEAD-IN RAILING

SB-8.1 Description

This work consists of the design, preparing shop drawings, fabrication, delivery, and erection of the timber lead-in guardrail. The Contractor shall perform work in accordance with the applicable provisions of MN DOT 1502, 2403, 2471, SB-7 (2403) Timber Bridge Construction, the Plans, and the following special provisions:

SB-8.2 Materials

A. Timber shall be per MN DOT 2403 and 3426 with these modifications: Timber shall be Douglas Fir No. 1 or better, or Southern Yellow Pine No. 1 or better. Timber shall be pressure treated as described below.

B. Hardware shall be per MN DOT specification 2403.2J.

C. All timber shall be pressure treated with copper naphthenate. The treated timber shall be coated with Ecosorb, or equivalent, to address the odor.

Wood shall be pre-cut and/or predrilled prior to treatment whenever possible, otherwise, all field cuts, drillings, notches, etc., in wood over 2” nominal thickness shall be coated with two heavy coats (minimum) of preservative compatible with existing preservative treatment.

D. The perforated PVC pipe shall be constructed using Schedule 80 PVC pipe. Perforations shall consist of drilling a ½” diameter hole every 50 square inches of the PVC pipe.

E. The geotextile fabric that shall wrap the PVC pipe shall be Type 1 Geotextile Fabric conforming to MN DOT specification 3733.

F. The backfill for the typical lead-in rail post installation shall consist of a 2” (-) crushed rock material.

SB-8.3 Construction Requirements

A. General Design Requirements

General schematic design has been performed to establish the design intent of the timber lead-in railing. The Contractor shall perform design calculations concurrently with the bridge deck and bridge railing design, as necessary, to confirm the railing member sizes and post embedment depth. The design shall be in accordance with the 2014 Edition of the AASHTO LRFD Bridge Design Specifications, all current interims, the 2009 Edition of the AASHTO LRFD Guide Specifications for the Design of Pedestrian Bridges, the MN DOT Bikeway Facility Design Manual, and the MN DOT LRFD Bridge Design Manual.

1. Specific Design Requirements

The lead-in rail shall meet the following criteria:

a. The maximum allowed opening in the rails between the deck surface and a line 27 inches above the deck is 6 inches. Above 27 inches and up to the top of top rail, the maximum allowed opening is 8 inches. The railing height shall be a minimum of 4’-6”.

The railing design shall meet the minimum design criteria as follows:

b. Horizontal Wind Loading: Wind loads are as specified in *AASHTO Signs*, Articles 3.8 and 3.9. Unless otherwise directed by the Owner, the structure shall have a Wind Importance Factor I_r of 1.15. Apply wind loading over the exposed area in front elevation including enclosures.

B. The design and all railing plan sheets shall contain the signature of an Engineer who is currently licensed by the State of Minnesota as a Professional Engineer.

C. Handling Treated Products

Care and handling of preservative treated wood products shall be in accordance with AWPA Standard M4.

D. Lead-in Rail Plan Requirements and Submittals

1. Lead-in Rail plans/shop drawings shall be developed concurrently with the bridge deck and bridge railing plans and as described in SB-6.3F2.

E. Fabrication

Timber Lead-In Railing fabrication shall not begin until the detailed plans/shop drawings have been approved by the Engineer. Any work performed prior to the Engineer's approval, is subject to the requirements of MN DOT 1512.

F. Installation

Installation shall be per MN DOT 2403.3, except the construction tolerance for the guardrail is 3/8" per 8' of length. Materials not meeting these tolerances are subject to rejection. Any modifications made to correct out of tolerance work will require approval of the Engineer. All costs associated with the repair or replacement of out of tolerance work/materials shall be borne by the Contractor.

Grounding of the guardrail shall be coordinated with the bridge. Refer to SB-6.3I for grounding requirements.

SB-8.4 Method of Measurement

The lead-in guardrail will be measured by length (feet) based on Plan dimensions.

SB-8.5 Basis of Payment

Payment for Item No. 2403.603 "Timber Lead-In Railing" will be made at the Contract price per foot and shall be compensation in full for all costs of performing the work described above for designing, furnishing and erecting the entire timber lead-in railing. Hardware and minor deviations in member sizes or depths shall be considered incidental to the lineal foot price bid for Timber Lead-In Railing.

SB-9 <u>(2433) REMOVE REGULATED WASTE MATERIAL (BRIDGE) (TRESTLE)</u>

Apply the provisions of MN DOT 2433 except as supplemented below.

SB-9.1 Description

This Section applies to all demolition, salvage, and disposal of items indicated in the Plans and Specifications or as directed by the Engineer.

A. Demolition, salvage, and disposal shall include all labor, equipment, materials, accessories and all else necessary to perform the work in accordance with the Plans and Specifications and as directed by the Engineer.

B. Items designated shall be removed and disposed of in accordance with all applicable laws and regulations. Items designated for salvage or reuse shall be carefully removed and stockpiled at an agreed upon location on the project site. The City reserves the right to identify additional items to be salvaged by the Contractor. Salvaged items shall remain the property of the City.

C. An Asbestos and Regulated Waste Assessment Report was prepared by Environmental Troubleshooters dated May 2017. The assessment report included with the Plan or Special Provisions is intended for informational purposes. Quantity, type, and analysis of any asbestos or regulated waste containing material are estimates intended as a general guide.

1. The Contractor is hereby notified that paint system on the Stewart Creek Bridge is believed to contain lead.
2. The Contractor is hereby notified that there are approximately 164 – 12', 1 – 16', 40 – 20' and 2 – 22' timber ties along with parapet timbers, rail posts, walk planks and railing timbers treated with creosote on the Stewart Creek Bridge.
3. The approximate creosote treated timber quantities on the timber pile trestle are enumerated on the Timber Pile Trestle Removal plan.

If during the course of the bridge removal or renovation process, additional regulated wastes, other than that noted in Item "C" are encountered, the Contractor shall notify the Engineer who shall suspend work and the Contractor shall furnish a documented inspection and evaluation by a certified contractor prior to the resumption of work. The work, as outlined in this paragraph, will be paid for as Extra Work.

All asbestos and/or regulated waste shall be disposed of in accordance with MN DOT's manual "Asbestos and Regulated Waste Manual for Building Demolition or Relocations for Construction Projects" available on the following website: http://www.dot.state.mn.us/environment/publications/publications.html. Only those listed in this manual as pre-approved for asbestos and/or regulated waste will be allowed to work on this Project.

Lead paint was indicated in the Asbestos and Regulated Waste Report as the coating on the steel superstructure and steel bents. All lead paint on the girders must be stabilized by coating with an elastormer that meets the U.S. Environmental Protection Agency's definition as a barrier coating that will prevent the peeling paint from flaking during demolition or installation. This work must be completed in accordance with MN DOT's manual "Asbestos and Regulated Waste Manual for Building Demolition or Relocations for Construction Projects" available on the following website: http://www.dot.state.mn.us/environment/publications/publications.html. The approved barrier coating is SE 110 MS by Safe Encasement Systems (clear finish). Ph. 651-454-4107, sold at Diamond Vogel Paints or approved equal.

Codes

(i) Before the work of this Section is started, the Contractor shall obtain all permits required by Federal, State, and local jurisdictions for all phases and operations of the work, and shall perform the work in accordance with all applicable Federal, State, and local codes and restrictions.
1. MPCA Notification of Intent to Perform a Demolition
2. Minnesota Pollution Control Agency Chapter 7080

D. The Contractor is responsible for protecting any work areas from traffic along the trail. The Contractor shall furnish, place, and maintain the devices. As noted in the Plans, the Contractor shall place the following at both ends of the Stewart Creek Bridge and both ends of the timber pile trestle, as directed by the Engineer:
1. Portable precast concrete barrier across the width of the trail.
2. Barricade with reflective sheeting on one side along with "Trail Closed" sign. The reflective sheeting shall be orange and white and be made of high performance fluorescent sign sheeting or an approved equal.
3. One flashing warning light shall be installed upon each barricade.

Contractor shall make the same type of closings on the Clyde Connector Trail at both Skyline Parkway and just below the intersection of the Clyde Connector Trail and the DWP Trail. This is to protect public safety during times when construction is occurring and when bridges are removed and repaired.

SB-9.2 MATERIALS

SB-9.3 CONSTRUCTION REQUIREMENTS

A. Submittals

Contractor shall submit a plan detailing the proposed demolition and disposal of the creosote timber members identified for removal in the plans. Contractor shall not start demolition until the demolition and disposal plan has been accepted by the Engineer.

B. Execution

Structures and facilities that are to remain in place will be indicated in the Contract or designated by the Engineer. The Engineer may determine that the existence of a structure or an obstruction does not interfere with, endanger, or detract from the new construction in any way, and therefore, may remain in place. Prior to commencing any demolition, the Contractor shall install erosion and sediment control measures as indicated on the Plans in the Specifications or as directed by the Engineer. Removal material that drops to the ground shall be retrieved and disposed of properly.

1. Each load delivered must be weighed and accompanied by a load ticket indicating the gross weight, tare weight, truck number, date and time of delivery.

2. The Engineer or his designated representative will collect the load tickets on a daily basis.

3. Documentation of legal disposal shall be provided to the Engineer before payment will be made for the disposal of creosote timbers.

C. Removals

1. The Contractor shall remove and dispose of all structures and obstructions as indicated on the Plans in the Specifications except those that are permitted to remain by the Engineer.

2. Removal operations that may endanger new construction shall be completed prior to construction of the affected work. Materials that have been designated for salvage shall be removed in a manner that will not result in unwarranted damage. The salvaged material shall be dismantled into section or assembly units as required to facilitate removing in undamaged condition and permit convenient handling.

3. Remaining Portion of Structure
Where a portion of an existing structure is to be retained for use, that portion shall not be damaged during removal operations.

4. MPCA – Notification of Intent to Perform a Demolition.
The demolition contractor shall prepare and submit to MPCA a "MPCA – Notification of Intent to Perform a Demolition" a minimum of ten (10) working days prior to commencing demolition of the structure.
The Notification form can be downloaded from the MPCA website. The web address is http://www.pca.state.mn.us/programs/asbestos_p.html , or an alternative form.

5. Creosote Removal and Disposal
Contractor shall obtain all permits required by Federal, State, and local jurisdictions for all phases and operations of the work, and shall perform the work in accordance with all applicable Federal, State, and local codes and restrictions.

Transportation and disposal of creosote timbers shall be in a legal manner in accordance with Minnesota Pollution Control Agency regulations. The regulations state that wood treated with creosote shall be disposed of at a hazardous waste incinerator or placed in a lined solid waste landfill such as a Municipal Solid Waste landfill.

Contractor shall be responsible to obtain any permits required to chip, grind or store creosote timbers prior to disposal in an incinerator.

Disposal in demolition landfill is prohibited.

Open burning of creosote or treated wood is prohibited by state law (Minn. State § 88.171).

6. Concrete Removal and Disposal
Contractor shall carefully remove loose and spalled concrete on pedestals noted to have repair work done to them. Concrete to be disposed of properly off of project limits.

D. Repair and Restoration

The Contractor shall be responsible to repair or replace any items that are damaged by the Contractor's operations at no additional expense to the City. The City shall determine whether the items are repaired or replaced.

SB-9.4 Method of Measurement

No measurement will be made of any portion of the asbestos or regulated waste material removal, but the complete removal thereof as specified shall be construed to be included in the single lump sum for which payment is made under Remove Regulated Waste Material (Bridge) or Remove Regulated Waste Material (Trestle). The Engineer will designate those items to be salvaged.

No measurement will be made for preparing and submitting the "MPCA – Notification of Intent to Perform a Demolition"

No measurement will be made for supplying, installing and maintaining temporary traffic control devices.

SB-9.5 Method of Payment

Payment for Item No. 2433.509 "Remove Regulated Waste Material (Bridge)" and for Item No. 2433.509 "Remove Regulated Waste Material (Trestle)" will be made at the Contract price per lump sum and shall be compensation in full for all costs of performing the work described above for removal and disposal of creosote timber, concrete and miscellaneous steel items. Payment for preparing and submitting the "MPCA – Notification of Intent to Perform a Demolition" shall be incidental to price bid for "Remove Regulated Waste Material (Bridge)" and "Remove Regulated Waste Material (Trestle)".

1. The costs of any additional permits to dispose of the creosote timbers shall be incidental to the price bid for Remove Regulated Waste Material (Bridge).

2. Tipping fees shall be considered incidental to the price bid for each item identified in this section for disposal.
3. The costs of supplying, installing and maintaining temporary traffic control devices shall be incidental to the price bid for Remove Regulated Waste Material (Bridge).

SB-10 (2557) TRAIL GATE, TYPE SPECIAL

The provisions of MN DOT 2557 are modified and/or supplemented with the following:

SB-10.1 Description of Work

The item Trail Gate, Type Special includes all work necessary to furnish and install the gate, post and footing in accordance with the Plans and Specifications. The Contractor shall provide all labor, tools, equipment and materials necessary to accomplish this work.

SB-10.2 Materials

a. Trail gate shall be in accordance with MN DOT Specification 3379.

SB-10.3 Construction Requirements

a. Grounding

The trail gate shall be grounded. Install all electrical grounding in accordance with the applicable provisions of MN DOT specification 2557 and the National Electrical Code. Clamp or braze the ground wires to the grounding device, then practicably route and attach to the nearest rail by clamping, brazing, or any other approved means that will provide a permanent positive connection. If rail has non-continuous sections, use a #6 AWG solid copper wire to connect adjacent railing panels.

SB-10.4 Method of Measurement

Trail Gate, Type Special will be measured by the actual number of gates installed, complete in place.

SB-10.5 Basis of Payment

Payment for Item No. 2557.602 Trail Gate, Type Special will be per each for the complete gate, including gate, post and foundation as indicated in the Proposal for Contract Work and installed in accordance with the Plans and Specifications.

SB-11 (2564) DELINEATOR, TYPE SPECIAL

The provisions of MN DOT 2564 are modified and/or supplemented with the following:

SB-11.1 Description of Work

The item Delineator, Type Special includes all work necessary to furnish and install the Signs and posts in accordance with the Plans and Specifications. The Contractor shall provide all labor, tools, equipment and materials necessary to accomplish this work.

SB-11.2 Materials

a. Signs shall be in accordance with MN DOT Specification 2564.

B. Sign posts shall be in accordance with MN DOT Specification 3401.

SB-11.3 Construction Requirements

b. The Horizontal Delineators shall be as shown on the Plans per the 2005 MN DOT Standard Signs Manual and MN DOT Specification 2564.
c. The metal sign posts shall be 10’ in length and meet MN DOT specification 3401.
d. Installation shall be per MN DOT specification 2564 and 3401.
e. Handling and storage shall be per MN DOT specification 2564 and 3401.
f. The signs shall be placed as designated by the Engineer.
g. Materials not meeting the specifications shall be rejected and replaced by the Contractor, or repaired by a method acceptable to the Engineer.

SB-11.4 Method of Measurement

Delineator, Type Special will be measured by the actual number of delineator signs installed, complete in place.

SB-11.5 Basis of Payment

Payment for Item No. 2564.550 Delineator, Type Special will be per each for the complete sign, including post and fasteners as indicated in the Proposal for Contract Work and installed in accordance with the Plans and Specifications.

CONSTRUCTION PLANS FOR:

STEWART CREEK BRIDGE REHABILITATION
CITY OF DULUTH

CONSTRUCTION PLANS FOR STEWART CREEK BRIDGE REHABILITATION,CULVERT REHABILITATION, AND CLYDE TRAIL TIMBER TRESTLE DEMOLITION.

LEGEND

- EXISTING MAJOR CONTOUR (10')
- EXISTING MINOR CONTOUR (2')
- EXISTING CONCRETE
- EXISTING TRAIL
- PROPOSED CONCRETE
- PROPOSED DOWEL BARS
- PROPOSED RIPRAP

EXISTING UTILITY LOCATIONS

THE CONTRACTOR SHALL VERIFY ALL EXISTING UNDERGROUND UTILITY LOCATIONS AND ELEVATIONS PRIOR TO CONSTRUCTION. ALL INPLACE UTILITIES MAY NOT BE SHOWN ON THIS PLAN & THOSE THAT ARE SHOWN, MAY NOT BE SHOWN IN THE EXACT LOCATIONS.

THE SUBSURFACE UTILITY INFORMATION IN THIS PLAN IS UTILITY QUALITY LEVEL "D". THIS QUALITY LEVEL WAS DETERMINED ACCORDING TO THE GUIDELINES OF CI/ASCE 38-02, ENTITLED "STANDARD GUIDELINES FOR THE COLLECTION AND DEPICTION OF EXISTING SUBSURFACE UTILITY DATA..

GOPHER STATE ONE CALL
651.454.0002
800.252.1166
811
1.866.640.3637 (EMERGENCY LOCATES ONLY)
http://www.gopherstateonecall.org/submit

LOCATION MAP

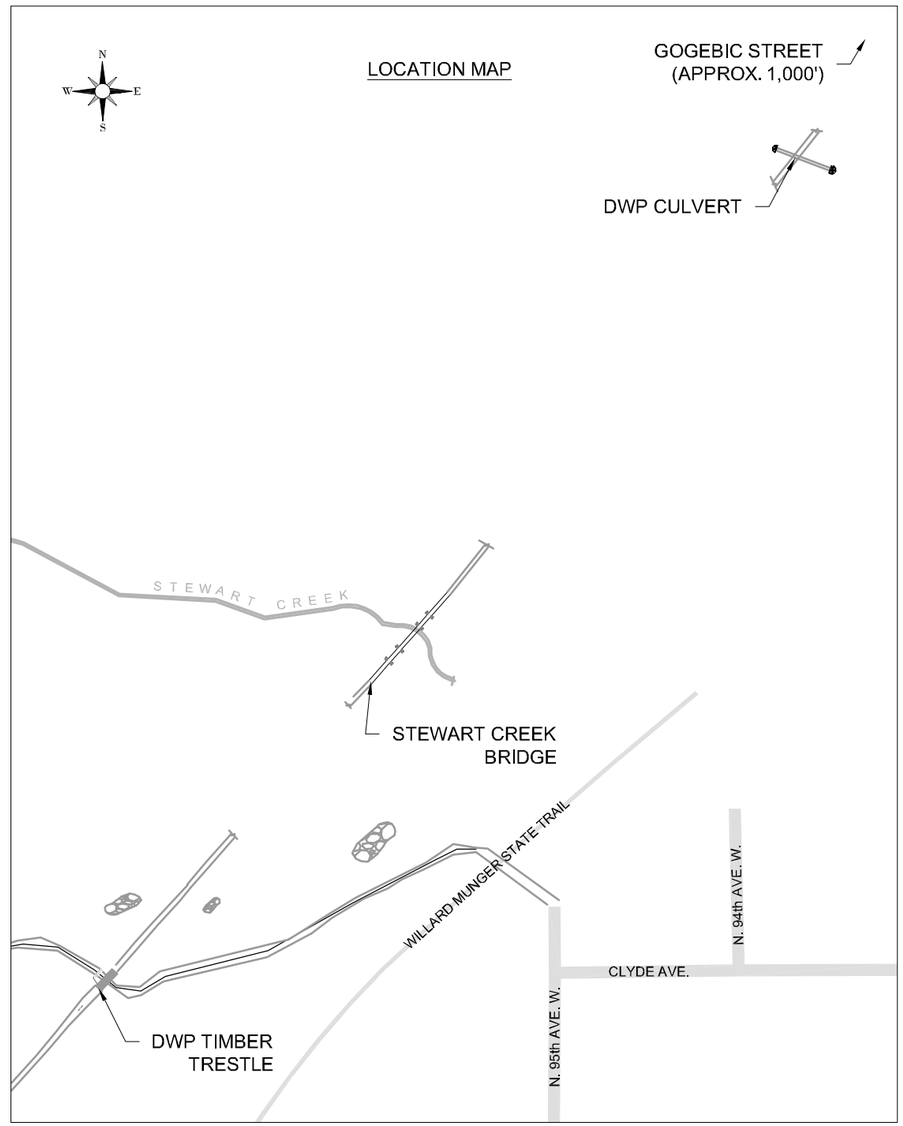

SPECIFICATION REFERENCE

1.) THE 2016 MNDOT STANDARD SPECIFICATIONS FOR CONSTRUCTION SHALL APPLY TO ALL STRUCTURES AND MATERIALS.
2.) TRAFFIC CONTROL DEVICES AND SIGNING SHALL CONFORM TO THE MN MUTCD, INCLUDING THE FIELD MANUAL DATED FEBRUARY 2015.
3.) THE MINNESOTA DEPARTMENT OF NATURAL RESOURCES TRAIL PLANNING, DESIGN AND DEVELOPMENT GUIDELINES SHALL APPLY TO ANY TRAIL GRADING WORK.

SHEET INDEX

SHEET NUMBER	SHEET TITLE
1	TITLE SHEET
2	SCHEDULE OF ESTIMATED QUANTITIES
3	STEWART CREEK BRIDGE GENERAL PLAN
4	STEWART CREEK BRIDGE MISCELLANEOUS DETAILS
5	STEWART CREEK BRIDGE RAILING DETAILS
6	STEWART CREEK BRIDGE STEEL DETAILS
7	STEWART CREEK BRIDGE PEDESTAL REPAIR PLAN
8	TIMBER PILE TRESTLE REMOVAL
9	DWP CULVERT PLAN & PROFILE
10	DWP CULVERT DETAILS
11	DWP CULVERT DETAILS
12	TREE/ROOT CUTTING DETAIL
13	TIMBER TRESTLE GRADING ALT - 1

PROJECT LOCATION
ST. LOUIS COUNTY
CITY OF DULUTH
SECTION 27
T 49 , R 15

CONTRACTOR TO NOTIFY 911 PERSONNEL PRIOR TO ALL ROAD CLOSURES.

THIS PLAN SET CONTAINS 13 SHEETS

I HEREBY CERTIFY THAT THIS PLAN WAS PREPARED BY ME OR UNDER MY DIRECT SUPERVISION AND THAT I AM A DULY LICENSED ENGINEER UNDER THE LAWS OF THE STATE OF MINNESOTA.

WILL D. DEROCHER

DATE 07/24/2017 LIC. NO. 54757

NO.	DATE	BY	DESCRIPTION OF REVISIONS
1	7/27/2017	WD	ISSUED FOR BID

DESIGNED WD DRAWN WD CHECKED JG

I HEREBY CERTIFY THAT THIS PLAN WAS PREPARED BY ME OR UNDER MY DIRECT SUPERVISION AND THAT I AM A DULY LICENSED PROFESIONAL ENGINEER UNDER THE LAWS OF THE STATE OF MINNESOTA
WILL D. DEROCHER
DATE JULY 24, 2017 LIC. NO. 54757

TKDA
11 East Superior Street
Suite 420
Duluth, MN. 55802
218.724.8578
tkda.com

STEWART CREEK BRIDGE
DULUTH MINNESOTA

CITY PROJECT NO. MSA NO.

TITLE SHEET

PROJECT NO. 16346.000
RECORD NO.
SHEET NO. 1

FIELD BOOK:
PLOT DATE: 7/27/2017
Drawing name: K:\civil\Duluth_City\16346000\04_Production\01_CAD\02_Sheets\DWP Culvert Replacement.dwg
Xrefs: Clyde Connector_Existing_Base

SCHEDULE OF ESTIMATED QUANTITIES

LINE NO.	NOTE NO.	SPEC. NO	ITEM DESCRIPTION	UNIT OF MEASURE	BASE QUANTITY	ALT 1 (DWP)	ALT 2 (CULVERT)
1		2021.501	MOBILIZATION	Lump Sum	1		
2	1	2101.501	CLEARING (BRUSH)	Acre	0.7		0.1
3	2	2101.502	CLEARING (4" OR GREATER)	Tree	12	4	2
4	3	2105.501	COMMON EXCAVATION	Cubic Yard		550	25
5	6	2105.601	TEMPORARY STREAM DIVERSION SYSTEM	Lump Sum			1
6	7	2105.602	GRAVEL ENTRANCE RESTORATION	Lump Sum	1		1
7	4	2105.604	GEOTEXTILE FABRIC TYPE VII	Square Yard			25
8	11	2118.501	SALVAGE AGGREGATE	Cubic Yard		45	
9		2401.602	REPAIR CONCRETE PEDESTAL	Each	3		
10		2403.601	TIMBER BRIDGE DECK	Lump Sum	1		
11		2403.603	BRIDGE RAILING	Linear Foot	484 (P)		
12		2403.603	TIMBER LEAD-IN RAILING	Linear Foot	64 (P)		
13		2411.501	STRUCTURAL CONCRETE (3G52)	Cubic Yard			14
14		2433.507	REMOVE REGULATED WASTE MATERIAL (BRIDGE)	Lump Sum	1		
15	8	2433.507	REMOVE REGULATED WASTE MATERIAL (TRESTLE)	Lump Sum	1		
16		2433.602	GROUTED REINFORCEMENT BARS	Each			121
17	10	2501.603	CULVERT REPAIR - SPECIAL	Lump Sum			1
18	4	2511.501	RANDOM RIPRAP CLASS IV	Cubic Yard			24
19		2557.602	TRAIL GATE, TYPE SPECIAL	Each	4		
20	9	2563.601	TRAFFIC CONTROL	Lump Sum	1		
21		2564.550	DELINEATOR, TYPE SPECIAL	Each	4		
22		2573.502	SILT FENCE, TYPE HI	Linear Foot	100		
23		2573.533	SEDIMENT CONTROL LOG TYPE COMPOST	Linear Foot	50	300	150
24	5	2575.523	EROSION CONTROL BLANKET, CATEGORY 3	Square Yard	250	600	200
25	5	2575.502	SEED TYPE 36-311 (WOODLAND EDGE NE)	Pound	2	2	4
26	5	2575.501	SEEDING	Square Yard	250	600	200

NOTES:

1. ITEM INCLUDES CLEARING AND GRUBBING NECESSARY TO PROVIDE CONTRACTOR WITH ACCESS. CLEARING WILL BE NECESSARY ALONG THE DWP TRAIL, UNDERNEATH STEWART CREEK BRIDGE AND AROUND TIMBER TRESTLE REMOVAL SITE. A 12' WIDTH MAY BE CLEARED ALONG THE DWP TO PROVIDE SITE ACCESS. CLEARING UNDERNEATH THE STEWART CREEK BRIDGE SHALL INCLUDE THE ENTIRE BRIDGE FOOTPRINT ALONG WITH ANY TREES OVERHANGING THE STRUCTURE.
2. ITEM INCLUDES CLEARING AND GRUBBING TREES AS NECESSARY TO PROVIDE CONTRACTOR WITH SITE ACCESS. ALL TREES/ROOTS SHALL BE CUT CLEANLY WITH A SAW OR AX ACCORDING TO DETAIL 1/12. ANY MAPLE OR BIRCH TREES >6" DIAMETER AT CHEST HEIGHT ARE SUBJECT TO THE UDC TREE REPLACEMENT REQUIREMENTS AND SHALL BE ONLY BE CUT UNDER THE DIRECTION OF THE CITY OR PROJECT ENGINEER.
3. ITEM INCLUDES EXCAVATION NECESSARY TO INSTALL CULVERT RIPRAP IN BASE BID. ALTERNATE 1 INCLUDES TRAIL GRADING OF THE DWP TRAIL NEAR THE TIMBER TRESTLE AT THE INTERSECTION OF THE DWP AND CLYDE CONNECTOR TRAILS. ONCE GRADED, CONTRACTOR MAY USE DWP TO ACCESS THE WEST SIDE OF THE STEWART CREEK BRIDGE. EXCESS GRANULAR MATERIAL MAY BE USED TO FILL RUTS IN THE CLYDE TRAIL BELOW THE DWP TO IMPROVE CONSTRUCTION ACCESS. SEE SHEET 13 FOR DETAILS.
4. RIPRAP & GEOTEXTILE FABRIC TO BE INSTALLED AT INLET AND OUTLET OF REPAIRED CULVERT.
5. ALL DISTURBED AREAS SHALL BE SEEDED, BLANKETED AND STABILIZED. MNDOT SEED MIX 31-311 (WOODLAND EDGE NE) SHALL BE APPLIED AT A RATE OF 33.5 LBS/ AC.
6. CONTRACTOR WILL NEED TO BYPASS CREEK FLOWS TO PERFORM REPAIRS IN CONCRETE CULVERT UNDER THE DWP TRAIL. A SITE PLAN MUST BE SUBMITTED AND APPROVED BY THE PROJECT ENGINEER PRIOR TO CONSTRUCTION. A SYSTEM SUCH AS THE ONE SHOWN ON SHEET 10 MAY BE USED TO BYPASS FLOW TO PROVIDE SAFE ACCESS TO THE CULVERT.
7. ANY DISTURBED AREAS ALONG THE DWP MUST BE RESTORED TO EXISTING CONDITIONS OR BETTER ONCE ACCESS IS NO LONGER NEEDED. THIS ITEM INCLUDES THE ACCESS RAMPS ON THE NORTH SIDE OF THE TIMBER TRESTLE BRIDGE AND ACCESS FROM GOGEBIC STREET.
8. WORK ASSOCIATED WITH TRESTLE REMOVAL IS SHOWN ON SHEETS 3 AND 8.
9. TRAFFIC CONTROL ITEM SHALL INCLUDE FURNISHING AND INSTALLING BARRIERS, SIGNS AND FLASHERS TO CLOSE THE STEWART CREEK BRIDGE AT BOTH ENDS, THE TIMBER TRESTLE AT BOTH ENDS ON THE DWP TRAIL AS WELL AS THE CLYDE TRAIL AT SKYLINE PARKWAY AND JUST BELOW THE DWP TRAIL . SEE SPECIAL PROVISIONS SB-9..
10. ITEM SHALL INCLUDE ALL WORK AND MATERIALS ASSOCIATED WITH SANDBLASTING, CLEANING, SHORING AND PREPARING DWP CULVERT FOR CONCRETE OVERLAY.
11. SALVAGE AGGREGATE ITEM SHALL INCLUDE ALL WORK AND MATERIALS ASSOCIATED WITH SALVAGING AND REINSTALLING AGGREGATE ALONG DWP TRAIL. AGGREGATE SHALL BE SALVAGED PRIOR TO GRADING. 6" OF AGGREGATE SHALL BE REINSTALLED AND COMPACTED ALONG REGRADED SECTION OF DWP TO MATCH EXISTING TRAIL.

NO.	DATE	BY	DESCRIPTION OF REVISIONS
1	7/31/2017	WD	RE: ISSUED FOR BID

DESIGNED WD DRAWN WD CHECKED JG

I HEREBY CERTIFY THAT THIS PLAN WAS PREPARED BY ME OR UNDER MY DIRECT SUPERVISION AND THAT I AM A DULY LICENSED PROFESIONAL ENGINEER UNDER THE LAWS OF THE STATE OF MINNESOTA

WILL D. DEROCHER

DATE JULY 24, 2017 LIC. NO. 54757

TKDA
11 East Superior Street
Suite 420
Duluth, MN. 55802
218.724.8578
tkda.com

STEWART CREEK BRIDGE
DULUTH MINNESOTA

CITY PROJECT NO. MSA NO.

SCHEDULE OF ESTIMATED QUANTITIES

PROJECT NO. 16346.000

RECORD NO. SHEET NO. 2

FIELD BOOK:
FILE Date: 07/27/2017
Drawing name: K:\duluth_City\16346000\04_Production\01_CAD\02_Sheets\DWP Culvert Replacement.dwg
Xrefs: Clyde Connector_Existing_Base

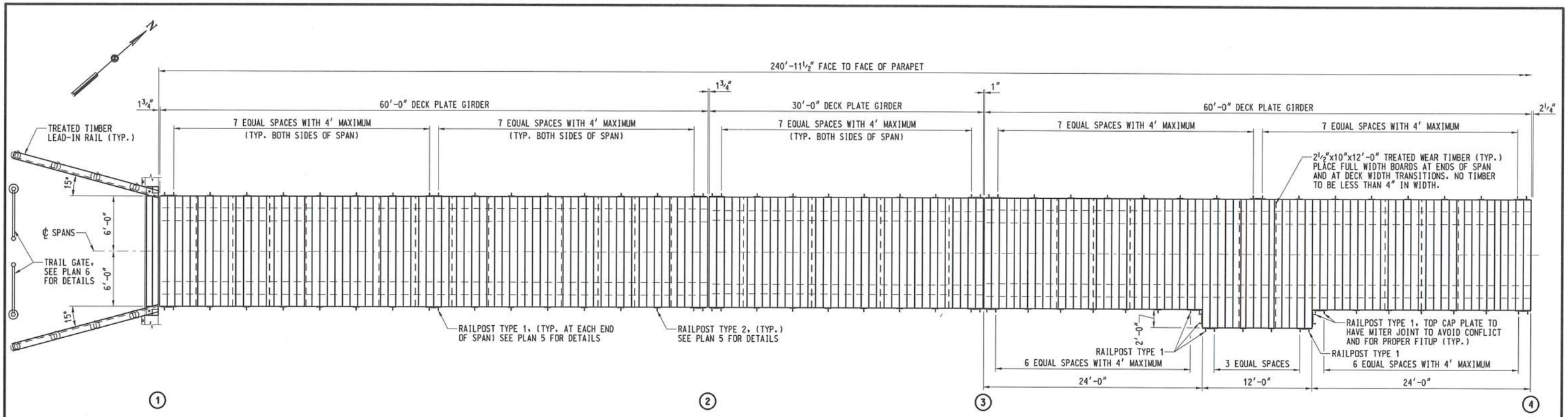

DECK PLAN SPANS 1 - 3

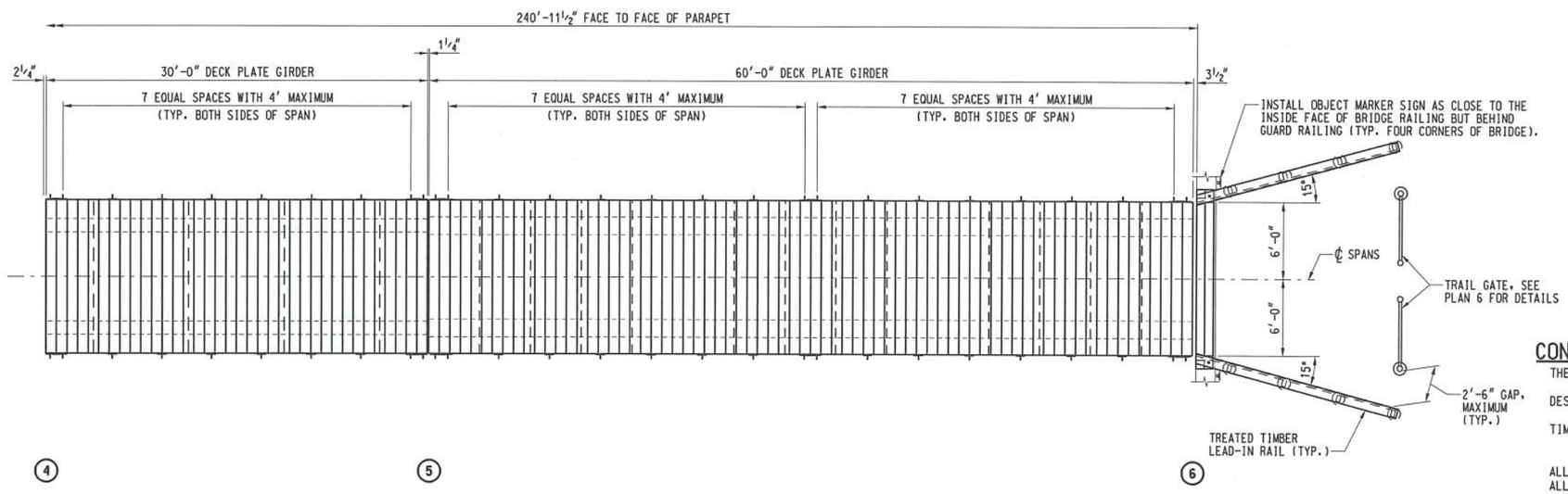

DECK PLAN SPANS 4 & 5

SCHEDULE OF ESTIMATED QUANTITIES - BRIDGE

ITEM	UNIT	QUANTITY
REMOVE REGULATED WASTE MATERIAL (BRIDGE)	LUMP SUM	1
REMOVE REGULATED WASTE MATERIAL (TRESTLE)	LUMP SUM	1
TIMBER BRIDGE DECK	LUMP SUM	1
BRIDGE RAILING	LIN. FT.	484 (P)
TIMBER LEAD-IN RAILING	LIN. FT.	64 (P)
REPAIR CONCRETE PEDESTAL	EACH	3
SILT FENCE, TYPE HI	LIN. FT.	100
TRAIL GATE, TYPE SPECIAL	EACH	4
DELINEATOR, TYPE SPECIAL	EACH	4

(P) DENOTES PLAN QUANTITY.

THE ITEMS LISTED IN SCHEDULE OF ESTIMATED QUANTITIES ARE THE ONLY PAY ITEMS FOR THIS PROJECT. ALL OTHER ITEMS SHOWN ON THE PLANS, OR CALLED FOR IN THE SPECIFICATIONS, SHALL BE CONSIDERED INCIDENTAL TO OTHER ITEMS BID.

CONSTRUCTION NOTES:

THE 2016 EDITION OF THE MINNESOTA DEPARTMENT OF TRANSPORTATION "STANDARD SPECIFICATIONS FOR CONSTRUCTION" SHALL GOVERN.

DESIGN LOADING SHALL CONSIST OF A PEDESTRIAN LOADING OF 90 PSF OR 20,000 POUND VEHICLE LIVE LOAD (H10 TRUCK).

TIMBER MATERIALS INSTALLED SHALL COMPLY WITH OR EXCEED THE FOLLOWING SCHEDULE:
DECK PLANKING: DOUGLAS FIR, NO. 1 & BETTER, Fb= 1,150 PSI
RAIL: SOUTHERN YELLOW PINE, NO. 2 OR BETTER, Fb= 850 PSI.

ALL TIMBER IS ROUGH SAWN UNLESS OTHERWISE NOTED.

ALL TIMBER SHALL BE TREATED WITH COPPER NAPHTHENATE IN ACCORDANCE WITH THE MOST CURRENT AWPA STANDARDS.

HOLES FOR BOLTS SHALL BE 1/16" LARGER THAN BOLT DIAMETER. HOLES FOR SCREWS SHALL BE 1/8" SMALLER THAN SCREW DIAMETER.

ANY BOLT HEAD OR NUT IN DIRECT CONTACT WITH TIMBER SHALL HAVE ONE PLATE WASHER BETWEEN IT AND THE TIMBER.

ALL SAWCUTS, HOLES OR ABRASIONS IN TIMBER MADE IN THE FIELD SHALL BE TREATED WITH TWO APPLICATIONS OF A 2% SOLUTION OF COPPER NAPHTHENATE.

ALL HOLES OR CUTS IN TOP OF LAMINATED TIMBER PANELS GREATER THAN 1/2" IN ANY DIRECTION AND RECESSES FOR DOMEHEAD BOLTS SHALL BE FILLED WITH BITUMINOUS MASTIC MEETING MnDOT SPEC. 3278.

UPSET THREADS OF BOLTS AFTER FINAL TIGHTENING.

NO.	DATE	BY	DESCRIPTION OF REVISIONS
1	7/27/2017	JES	ISSUED FOR BID

DESIGNED JES DRAWN JES CHECKED MJD

I HEREBY CERTIFY THAT THIS PLAN WAS PREPARED BY ME OR UNDER MY DIRECT SUPERVISION AND THAT I AM A DULY LICENSED PROFESSIONAL ENGINEER UNDER THE LAWS OF THE STATE OF MINNESOTA
JOHN SANDERS
DATE JULY 27, 2017 LIC. NO. 22505

TKDA
11 East Superior Street
Suite 420
Duluth, MN. 55802
218.724.8578
tkda.com

STEWART CREEK BRIDGE
DULUTH MINNESOTA
CITY PROJECT NO. MSA NO.

GENERAL PLAN

PROJECT NO. 16346.000
RECORD NO. SHEET NO. 3

File Location: K:\a-Duluth_CM\16360000\04_Production\01_CADD\2_Sheets\StewartCreekBridge\STEWART01.dgn
Date Printed: 7/26/2017 Time Printed: 2:06:05 PM

NOTE: REMOVE AND DISPOSE PARAPET TIMBERS AND THEIR FASTENERS.

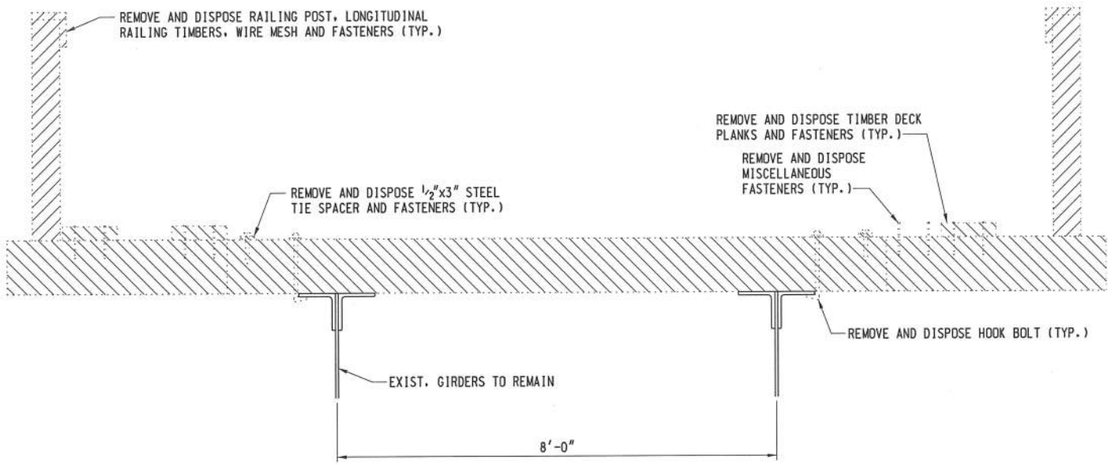

REMOVALS - TYPICAL SECTION

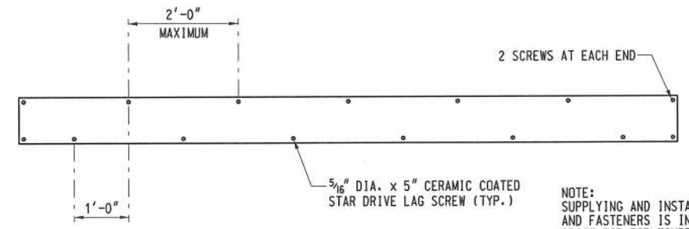

WEAR PLANK FASTENER DETAIL

NOTE:
SUPPLYING AND INSTALLATION OF WEAR PLANKS AND FASTENERS IS INCLUDED IN THE LUMP SUM PRICE BID FOR TIMBER BRIDGE DECK.

WEAR PLANKS SHALL BE FLUSH WITH END OF SPAN AND SHALL NOT EXTEND BEYOND END OF SPAN.

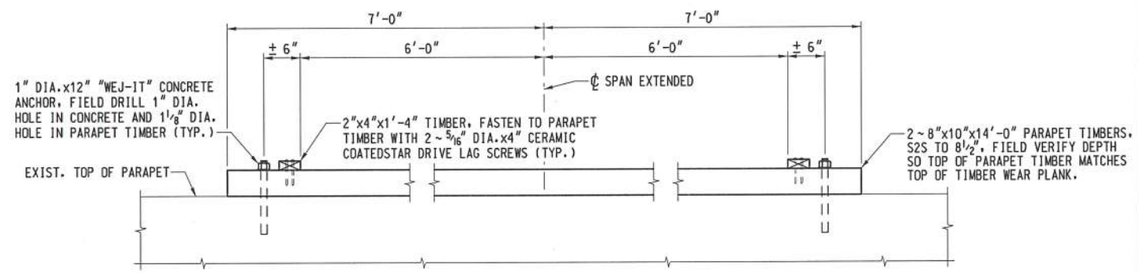

PARAPET TIMBER DETAIL

NOTE:
SUPPLYING AND INSTALLATION OF PARAPET TIMBERS AND FASTENERS IS INCLUDED IN THE LUMP SUM PRICE BID FOR TIMBER BRIDGE DECK.

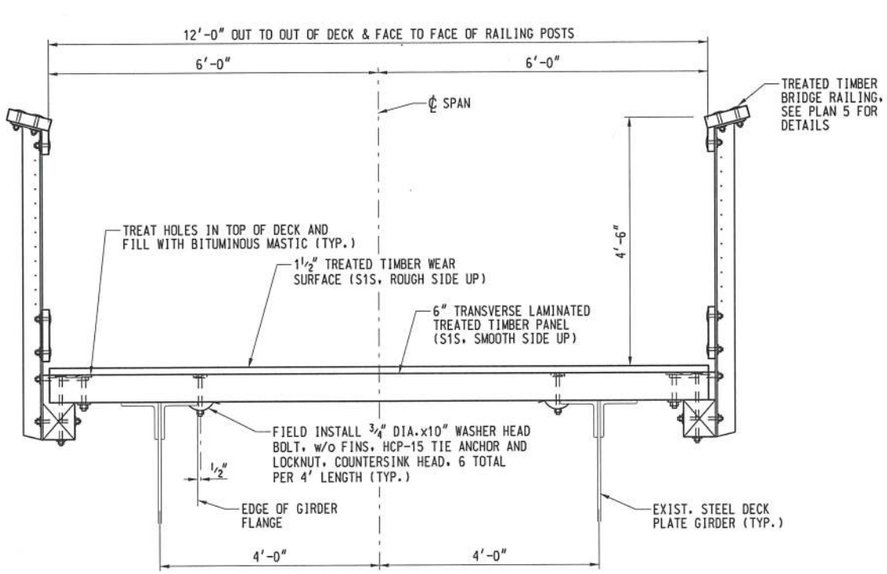

TYPICAL SECTION THRU NEW DECK

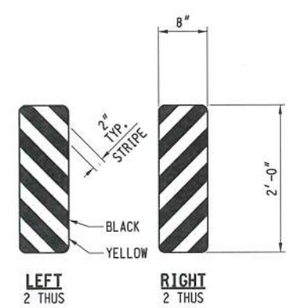

OBJECT MARKER SIGN DETAILS

REMOVAL NOTES:

REMOVALS SHALL BE COMPLETED IN A SAFE AND RESPONSIBLE MANNER.
EXISTING ITEMS TO REMAIN ON BRIDGE THAT ARE DAMAGED DURING CONSTRUCTION SHALL BE REPLACED WITH NEW MATERIAL TO MATCH EXISTING DESIGN. PAYMENT FOR REPLACEMENT ITEMS SHALL BE THE RESPONSIBILITY OF THE CONTRACTOR.
CREOSOTED TIMBER TIES, PLANKING, RAILPOSTS AND RAILING WERE NOTED DURING THE SITE VISIT. THIS MATERIAL MUST BE DISPOSED OF PROPERLY.
LEAD PAINT WAS NOTED IN THE ASBESTOS AND REGULATED WASTE REPORT. THIS PAINT IS PRESENT ON THE GIRDERS, BRACING AND TOWER BENTS. ALL LEAD PAINT ON GIRDERS MUST BE STABILIZED BY COATING WITH AN ELASTOMER THAT MEETS THE U.S. ENVIRONMENTAL PROTECTION AGENCY'S DEFINITION AS A BARRIER COATING THAT WILL PREVENT THE PEELING PAINT FROM FLAKING DURING THE PROJECT. THIS WORK MUST BE COMPLETED AS PER THE MN/DOT ASBESTOS AND REGULATED WASTE MANUAL FOR STRUCTURE DEMOLITION OR RELOCATIONS FOR CONSTRUCTION PROJECTS.
THE APPROVED BARRIER COATING IS SE 110 MS BY SAFE ENCASEMENT SYSTEMS (CLEAR FINISH), PH: 651-454-4107, SOLD AT DIAMOND VOGEL PAINTS.
"REMOVE REGULATED WASTE MATERIAL (BRIDGE)", SHALL BE PAYMENT IN FULL FOR ALL REMOVALS AND DISPOSALS SHOWN ON THIS PLAN, INCLUDING BUT NOT LIMITED TO: DECK, RAILING, TIE SPACERS AND FASTENERS, AND BARRIER COAT APPLICATION.

NO.	DATE	BY	DESCRIPTION OF REVISIONS
1	7/27/2017	JES	ISSUED FOR BID

DESIGNED JES DRAWN JES CHECKED MJD

I HEREBY CERTIFY THAT THIS PLAN WAS PREPARED BY ME OR UNDER MY DIRECT SUPERVISION AND THAT I AM A DULY LICENSED PROFESSIONAL ENGINEER UNDER THE LAWS OF THE STATE OF MINNESOTA. JOHN SANDERS
DATE JULY 27, 2017 LIC. NO. 22505

TKDA
11 East Superior Street
Suite 420
Duluth, MN. 55802
218.724.8578
tkda.com

STEWART CREEK BRIDGE
DULUTH MINNESOTA
CITY PROJECT NO. MSA NO.

MISCELLANEOUS DETAILS

PROJECT NO. 16346.000
RECORD NO. SHEET NO. 4

File Location: K:\Duluth_City\16346000\04_Production\01_CADD\2_Sheets\Sheet\Details\STEWART2.dgn
Date Printed: 7/26/2017 Time Printed: 2:06:06 PM

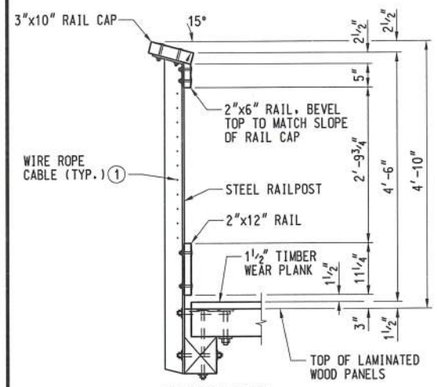

SECTION VIEW

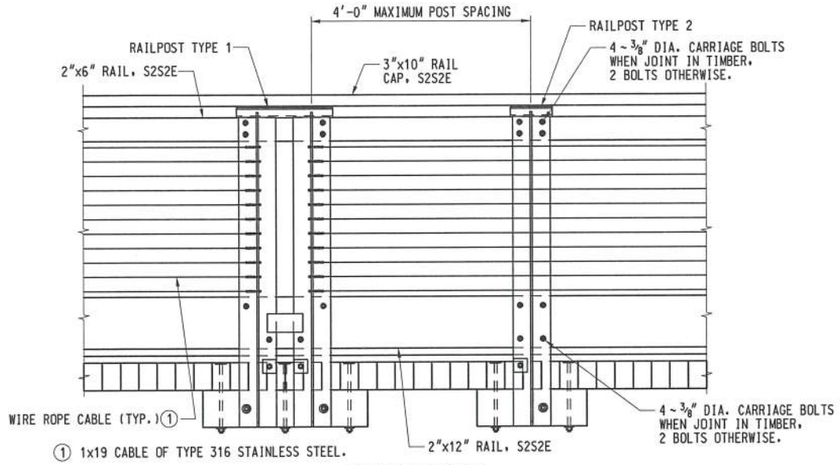

ELEVATION VIEW

LOOKING TOWARDS BRIDGE AT BACK SIDE OF RAILING

TYPICAL BRIDGE RAILING DETAILS

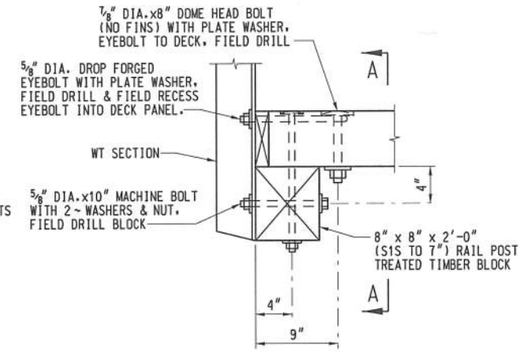

RAIL POST BLOCK DETAIL

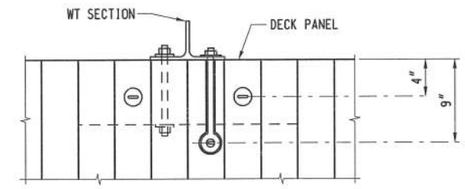

PLAN

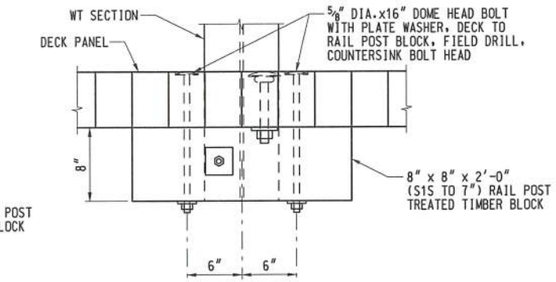

SECTION A-A

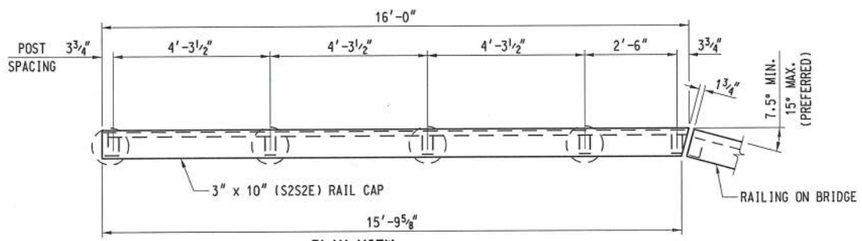

PLAN VIEW

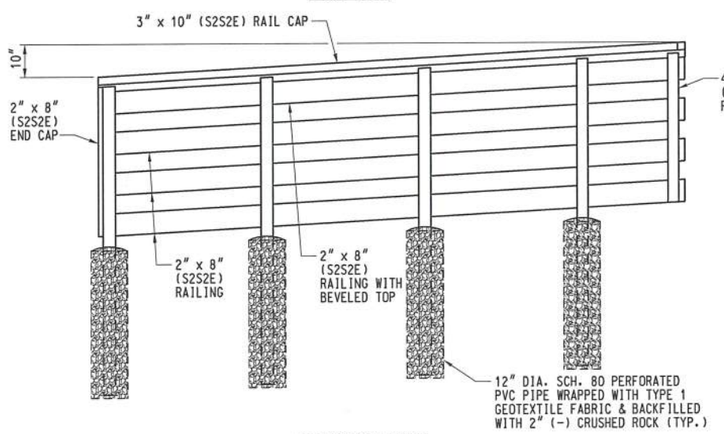

ELEVATION VIEW

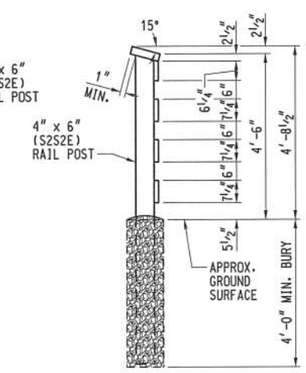

SECTION VIEW

LEAD-IN RAIL DETAILS

RAILING NOTES:

THE BRIDGE RAILING SYSTEM SHALL BE DESIGNED IN ACCORDANCE WITH CURRENT AASHTO SPECIFICATIONS. PROVIDE DESIGN COMPUTATIONS AND PLANS SIGNED BY A REGISTERED PROFESSIONAL ENGINEER LICENSED IN THE STATE OF MINNESOTA FOR REVIEW AND ACCEPTANCE.

RAILPOSTS SHALL BE CONNECTED TO THE DECK SYSTEM UTILIZING THROUGH TYPE BOLTS. NO LAG TYPE BOLTS OR SCREWS ARE ALLOWED FOR THIS CONNECTION. BOLT TO BE PLACED BELOW TOP OF TIMBER BRIDGE DECK. RAILPOST ATTACHMENT TO BE SIMILAR IN CONCEPT TO THAT SHOWN FOR RAILPOST BLOCK DETAIL.

WIRE ROPE CABLE AND HARDWARE SHALL BE SUPPLIED AS A SYSTEM AND INSTALLED AS PER MANUFACTURER'S INSTRUCTIONS. CONTRACTOR TO SUBMIT PROPOSED SYSTEM FOR APPROVAL BY ENGINEER. WIRE ROPE CABLE TO BE 3/16" DIAMETER, 1x19 CABLE OF TYPE 316 STAINLESS STEEL, OR APPROVED EQUAL. MINIMUM TENSION IN CABLE TO BE 225 POUNDS. POST SPACING NOT TO EXCEED 48 INCHES. MAXIMUM RUN OF CABLE TO BE 50 FEET.

RAILING MEMBERS SHALL BE ATTACHED TO THE RAIL POSTS WITH A MINIMUM OF TWO ⅜" DIA. CARRIAGE BOLTS PER POST INTERFACE UNLESS NOTED OTHERWISE.

RAIL CAPS SHALL BE SECURED TO THE TOP RAILING MEMBER WITH A MINIMUM OF 1 ~ #14x4" WOOD SCREW PER FOOT.

GENERAL NOTES:

BOLT PROJECTIONS EXCEEDING 1" SHALL BE CUT OFF. REPAIR END OF BOLT BY PAINTING WITH AN APPROVED ZINC-RICH PRIMER.

UPSET ALL BOLT THREADS AFTER FINAL TIGHTENING.

NO.	DATE	BY	DESCRIPTION OF REVISIONS
1	7/27/2017	JES	ISSUED FOR BID

DESIGNED JES DRAWN JES CHECKED MJD

I HEREBY CERTIFY THAT THIS PLAN WAS PREPARED BY ME OR UNDER MY DIRECT SUPERVISION AND THAT I AM A DULY LICENSED PROFESSIONAL ENGINEER UNDER THE LAWS OF THE STATE OF MINNESOTA

JOHN SANDERS

DATE JULY 27, 2017 LIC. NO. 22505

TKDA
11 East Superior Street
Suite 420
Duluth, MN. 55802
218.724.8578
tkda.com

STEWART CREEK BRIDGE
DULUTH MINNESOTA

CITY PROJECT NO. | MSA NO.

RAILING DETAILS

PROJECT NO. 16346.000

RECORD NO. | SHEET NO. 5

File Location: K:\Duluth_City\16346000\04_Production\01_CADD\2_Sheets\Stewart Creek Bridge\STEWART13.dgn
Date Printed: 7/26/2017 Time Printed: 2:06:07 PM

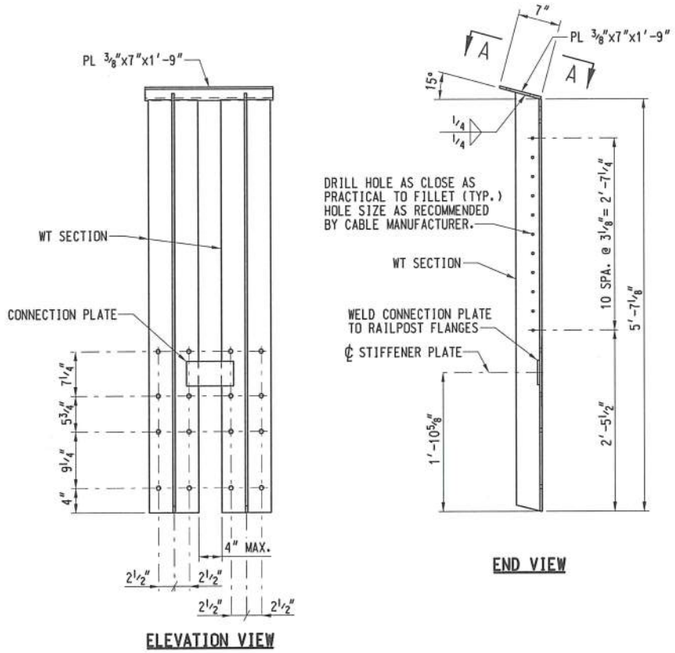

TYPE 1 RAILPOST DETAILS

31 REQ'D. - MK. TYPE 1

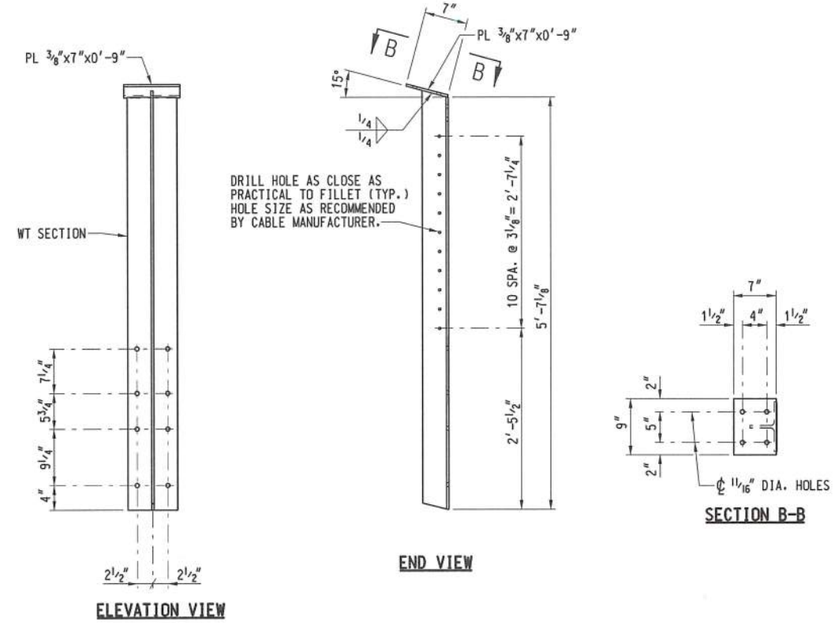

TYPE 2 RAILPOST DETAILS

96 REQ'D. - MK. TYPE 2

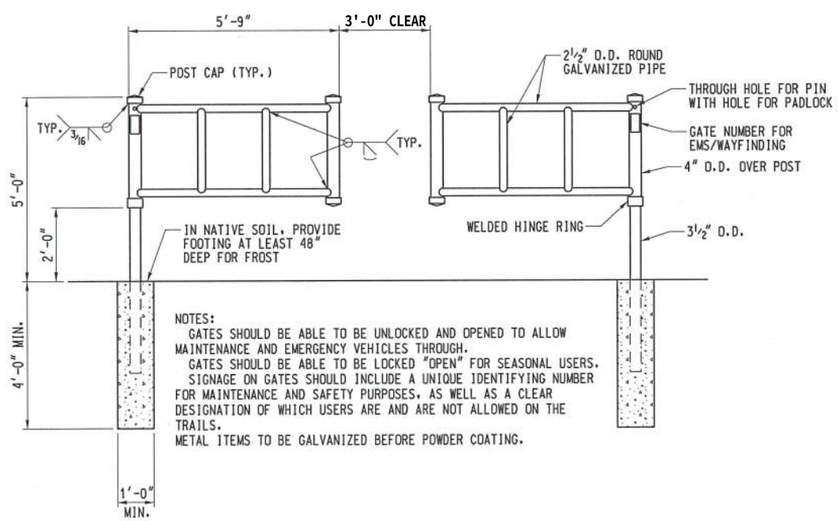

NOTES:
GATES SHOULD BE ABLE TO BE UNLOCKED AND OPENED TO ALLOW MAINTENANCE AND EMERGENCY VEHICLES THROUGH.
GATES SHOULD BE ABLE TO BE LOCKED "OPEN" FOR SEASONAL USERS.
SIGNAGE ON GATES SHOULD INCLUDE A UNIQUE IDENTIFYING NUMBER FOR MAINTENANCE AND SAFETY PURPOSES, AS WELL AS A CLEAR DESIGNATION OF WHICH USERS ARE AND ARE NOT ALLOWED ON THE TRAILS.
METAL ITEMS TO BE GALVANIZED BEFORE POWDER COATING.

TRAIL GATE DETAILS

4 REQ'D. - 2 AT BOTH ENDS OF BRIDGE

STEEL NOTES:

STRUCTURAL STEEL PLATE SHALL CONSIST OF MATERIAL PER A.S.T.M. A709, GRADE 36.
WT SECTIONS SHALL CONSIST OF MATERIAL PER A.S.T.M. A992.
FABRICATION PRACTICES SHALL CONFORM TO CURRENT A.R.E.M.A. CHAPTER 15 REQUIREMENTS FOR STEEL FABRICATION.
WELDING SHALL CONFORM TO CURRENT A.W.S. STRUCTURAL WELDING CODE D1.1.
ALL WELD MATERIAL SHALL BE EQUIVALENT TO BASE MATERIAL IN STRENGTH.
ALL HOLES TO BE DRILLED RATHER THAN PUNCHED.
DEBURR ALL HOLES AND EDGES ON STEEL PLATES AND SHAPES.
FOLLOWING FABRICATION, GALVANIZE RAILING POSTS PER A.S.T.M. A123. AFTER GALVANIZING, ALL ITEMS SHALL BE FREE OF FINS, ABRASIONS, ROUGH OR SHARP EDGES AND OTHER SURFACE DEFECTS.

NO.	DATE	BY	DESCRIPTION OF REVISIONS
1	7/27/2017	JES	ISSUED FOR BID

DESIGNED JES DRAWN JES CHECKED MJD

I HEREBY CERTIFY THAT THIS PLAN WAS PREPARED BY ME OR UNDER MY DIRECT SUPERVISION AND THAT I AM A DULY LICENSED PROFESSIONAL ENGINEER UNDER THE LAWS OF THE STATE OF MINNESOTA
JOHN SANDERS
DATE JULY 27, 2017 LIC. NO. 22505

TKDA
11 East Superior Street
Suite 420
Duluth, MN. 55802
218.724.8578
tkda.com

STEWART CREEK BRIDGE
DULUTH MINNESOTA
CITY PROJECT NO. MSA NO.

STEEL DETAILS

PROJECT NO. 16346.000
RECORD NO. SHEET NO. 6

File Location: G:\Duluth_CN\16346000\04_Production\01_CADD\2_Sheets\Bridge\Details\STEEL\STEEL.dgn
Date Printed: 7/26/2017 Time Printed: 2:06:09 PM

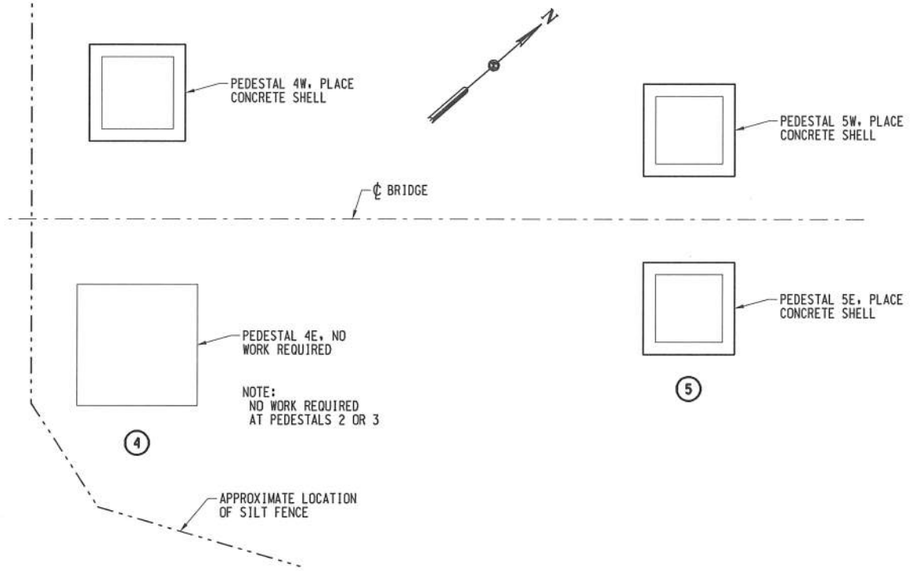

PEDESTAL REPAIR LOCATION PLAN

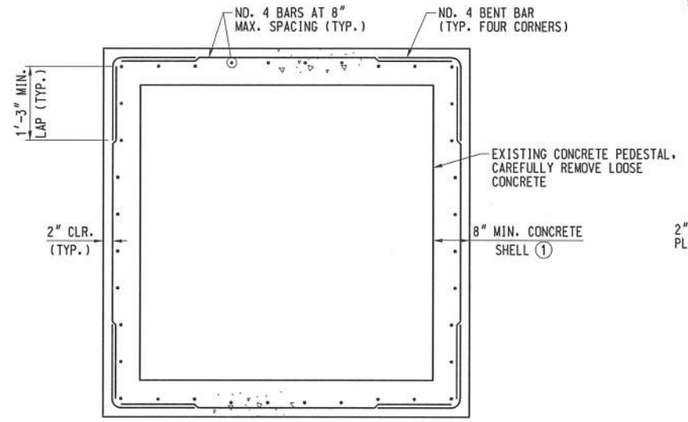

1 THE INTENT IS TO PROVIDE A 8" MINIMUM THICKNESS OF NEW CONCRETE AS MEASURED FROM THE FINISHED SURFACE OF THE EXISTING CONCRETE. WHERE SPALLING HAS TAKEN PLACE, THE DEPTH OF NEW CONCRETE WILL BE THICKER.

SECTION A-A

FIELD NOTES:

DIMENSIONS OF EXISTING CONCRETE PEDESTALS ARE APPROXIMATE. CONTRACTOR TO VERIFY PRIOR TO ORDERING REINFORCEMENT.
EPOXY RESINS USED FOR BONDING FRESH CONCRETE TO HARDENED CONCRETE SHALL CONFORM TO A.S.T.M. C881, TYPE V. APPLICATION TO FOLLOW MANUFACTURERS INSTRUCTIONS. CONTRACTOR TO SUBMIT PRODUCT FOR APPROVAL.
NEW CONCRETE SHALL CONFORM TO Mn/DOT CONCRETE MIX DESIGNATION 3B52.
REINFORCING STEEL SHALL CONFORM TO A.S.T.M. A615 GRADE 60 DEFORMED BARS (EPOXY COATED).
CONCRETE TO HAVE ORDINARY SURFACE FINISH.
LEAN MIX BACKFILL SHALL CONFORM TO Mn/DOT STANDARD CONSTRUCTION SPECIFICATION 2520.
"REPAIR CONCRETE PEDESTALS", SHALL BE PAYMENT IN FULL FOR ALL WORK SHOWN ON THIS PLAN, INCLUDING BUT NOT LIMITED TO: REMOVAL AND DISPOSAL OF LOOSE CONCRETE; FORMS, CONCRETE AND REINFORCEMENT FOR PLACEMENT OF CONCRETE SHELL; EXCAVATION, STAY-IN-PLACE FORMS AND LEAN MIX BACKFILL FOR EROSION MEDIATION.

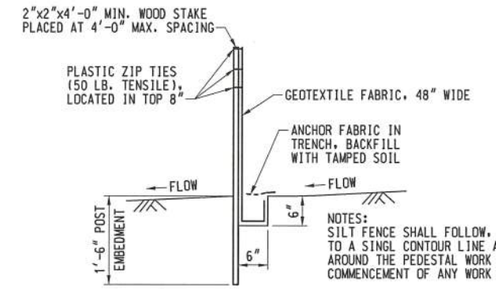

NOTES:
SILT FENCE SHALL FOLLOW, AS CLOSELY AS POSSIBLE, TO A SINGL CONTOUR LINE AND SHALL BE INSTALLED AROUND THE PEDESTAL WORK PERIMETER PRIOR TO THE COMMENCEMENT OF ANY WORK ON THE PEDESTALS.

SILT FENCE SHALL REMAIN INPLACE AND MAINTAINED UNTIL DIRECTED BY THE ENGINEER.

HEAVY DUTY SILT FENCE

HAND INSTALLED

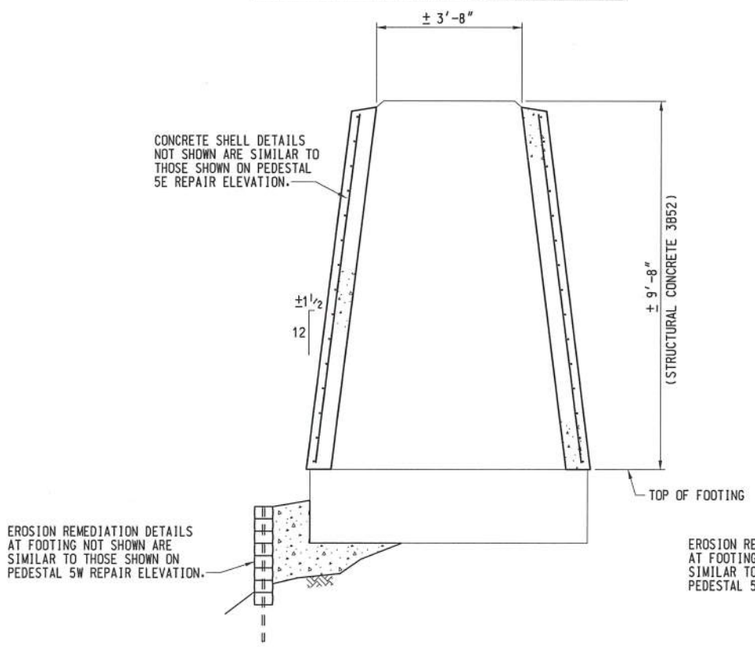

PEDESTAL 4W REPAIR ELEVATION

APPROX. VOLUME OF 3B52 CONCRETE = 5.3 CUBIC YARDS

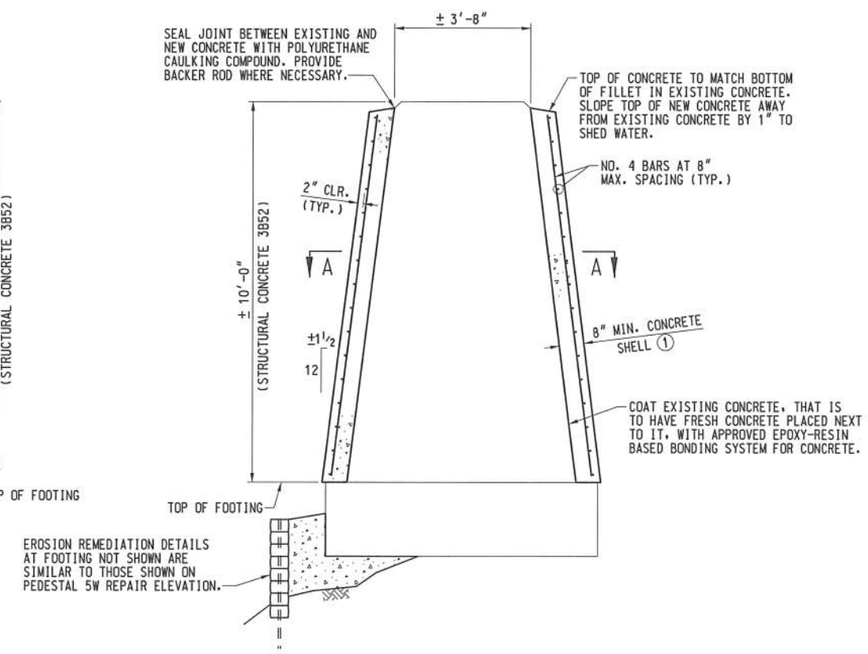

PEDESTAL 5E REPAIR ELEVATION

APPROX. VOLUME OF 3B52 CONCRETE = 5.5 CUBIC YARDS

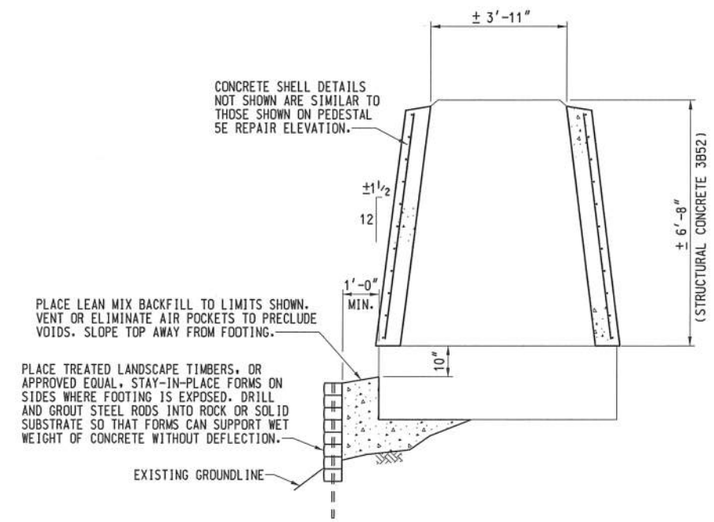

PEDESTAL 5W REPAIR ELEVATION

APPROX. VOLUME OF 3B52 CONCRETE = 3.6 CUBIC YARDS

NO.	DATE	BY	DESCRIPTION OF REVISIONS
1	7/27/2017	JES	ISSUED FOR BID

DESIGNED JES DRAWN JES CHECKED MJD

I HEREBY CERTIFY THAT THIS PLAN WAS PREPARED BY ME OR UNDER MY DIRECT SUPERVISION AND THAT I AM A DULY LICENSED PROFESSIONAL ENGINEER UNDER THE LAWS OF THE STATE OF MINNESOTA
JOHN SANDERS
DATE JULY 27, 2017 LIC. NO. 22505

TKDA
11 East Superior Street
Suite 420
Duluth, MN. 55802
218.724.8578
tkda.com

STEWART CREEK BRIDGE
DULUTH MINNESOTA
CITY PROJECT NO. MSA NO.

PEDESTAL REPAIR PLAN

PROJECT NO. 16346.000
RECORD NO. SHEET NO. 7

File Location: K:\e-f\Duluth_City\SNA0300\04_Production\01_CADD\2_Sheets\StewartCreekBridge\STEWART01.dgn
Date Printed: 7/26/2017 Time Printed: 2:06:10 PM

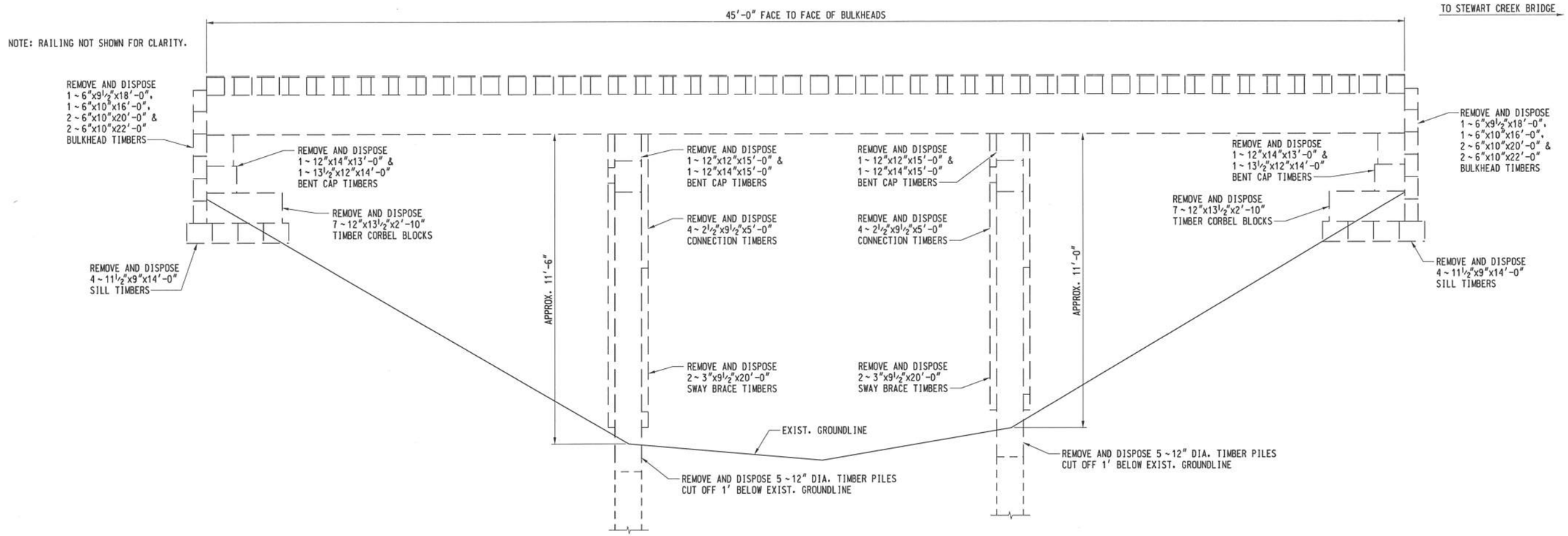

SUBSTRUCTURE REMOVALS - ELEVATION

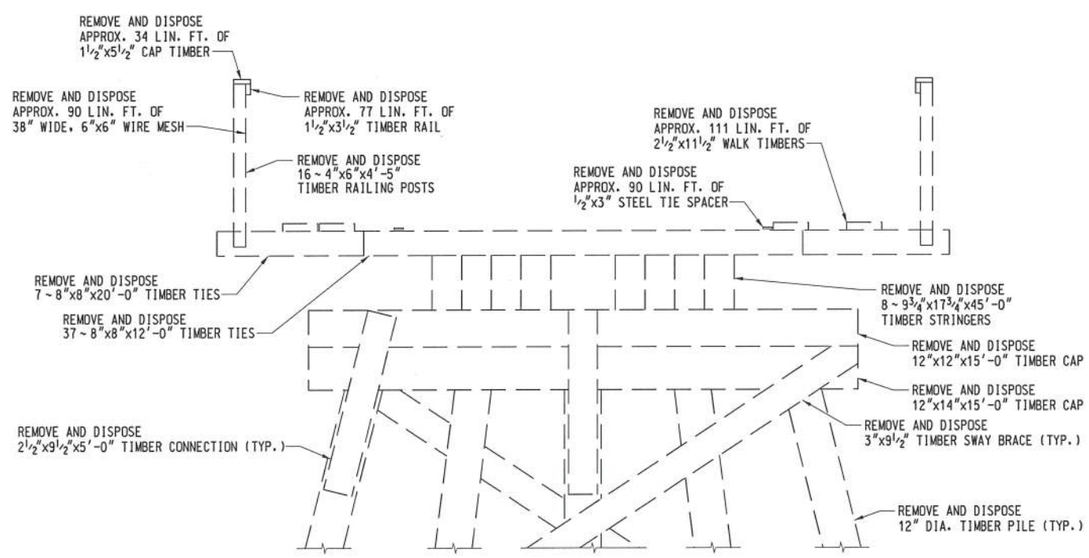

SUPERSTRUCTURE REMOVALS - TYPICAL SECTION AT INTERIOR BENT

REMOVAL NOTES:

THIS TIMBER PILE TRESTLE IS LOCATED APPROXIMATELY 800' SOUTHWEST OF THE STEWART CREEK BRIDGE ALONG THE DWP TRAIL.
REMOVALS SHALL BE COMPLETED IN A SAFE AND RESPONSIBLE MANNER.
THERE ARE TWO "NO TRESPASSING BRIDGE CLOSED" SIGNS AND POSTS THAT ARE TO BE SALVAGED AND RETURNED TO THE CITY OF DULUTH.
CREOSOTED TIMBER TIES, PLANKING, RAILPOSTS, RAILING AND SUBSTRUCTURES WERE NOTED DURING THE SITE VISIT. THIS MATERIAL MUST BE DISPOSED OF PROPERLY.
"REMOVE REGULATED WASTE MATERIAL (TRESTLE)", SHALL BE PAYMENT IN FULL FOR ALL REMOVALS AND THEIR DISPOSAL SHOWN ON THIS PLAN, INCLUDING BUT NOT LIMITED TO: DECK, RAILING, TIE SPACER, SUBSTRUCTURES AND THEIR FASTENERS.
NO MEASUREMENT OF MATERIAL REMOVED WILL BE MADE. THE QUANTITIES ARE GIVEN TO SIMPLY PROVIDE THE CONTRACTOR THE SCALE INVOLVED IN REMOVING THIS TIMBER PILE TRESTLE.

NO.	DATE	BY	DESCRIPTION OF REVISIONS
1	7/27/2017	JES	ISSUED FOR BID

DESIGNED JES DRAWN JES CHECKED MJD

I HEREBY CERTIFY THAT THIS PLAN WAS PREPARED BY ME OR UNDER MY DIRECT SUPERVISION AND THAT I AM A DULY LICENSED PROFESSIONAL ENGINEER UNDER THE LAWS OF THE STATE OF MINNESOTA
JOHN SANDERS
DATE JULY 27, 2017 LIC. NO. 22505

TKDA
11 East Superior Street
Suite 420
Duluth, MN. 55802
218.724.8578
tkda.com

STEWART CREEK BRIDGE
DULUTH MINNESOTA
CITY PROJECT NO. MSA NO.

TIMBER PILE TRESTLE REMOVAL

PROJECT NO. 16346.000
RECORD NO.
SHEET NO. 8

File Location: K:\Duluth_CN\16346\0004_Prefabricat\1_CADD\2_Sheets\StewartCreekBridge\STEWARTR.dgn
Date Printed: 7/26/2017 Time Printed: 2:06:11 PM

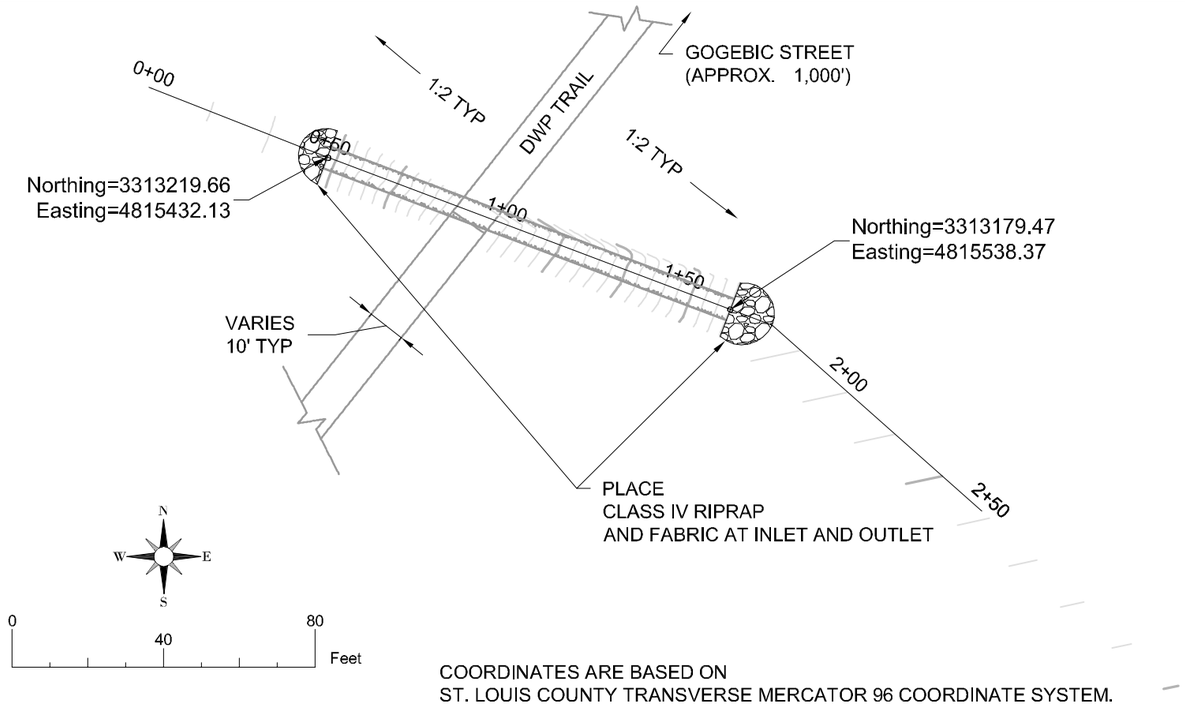

COORDINATES ARE BASED ON
ST. LOUIS COUNTY TRANSVERSE MERCATOR 96 COORDINATE SYSTEM.

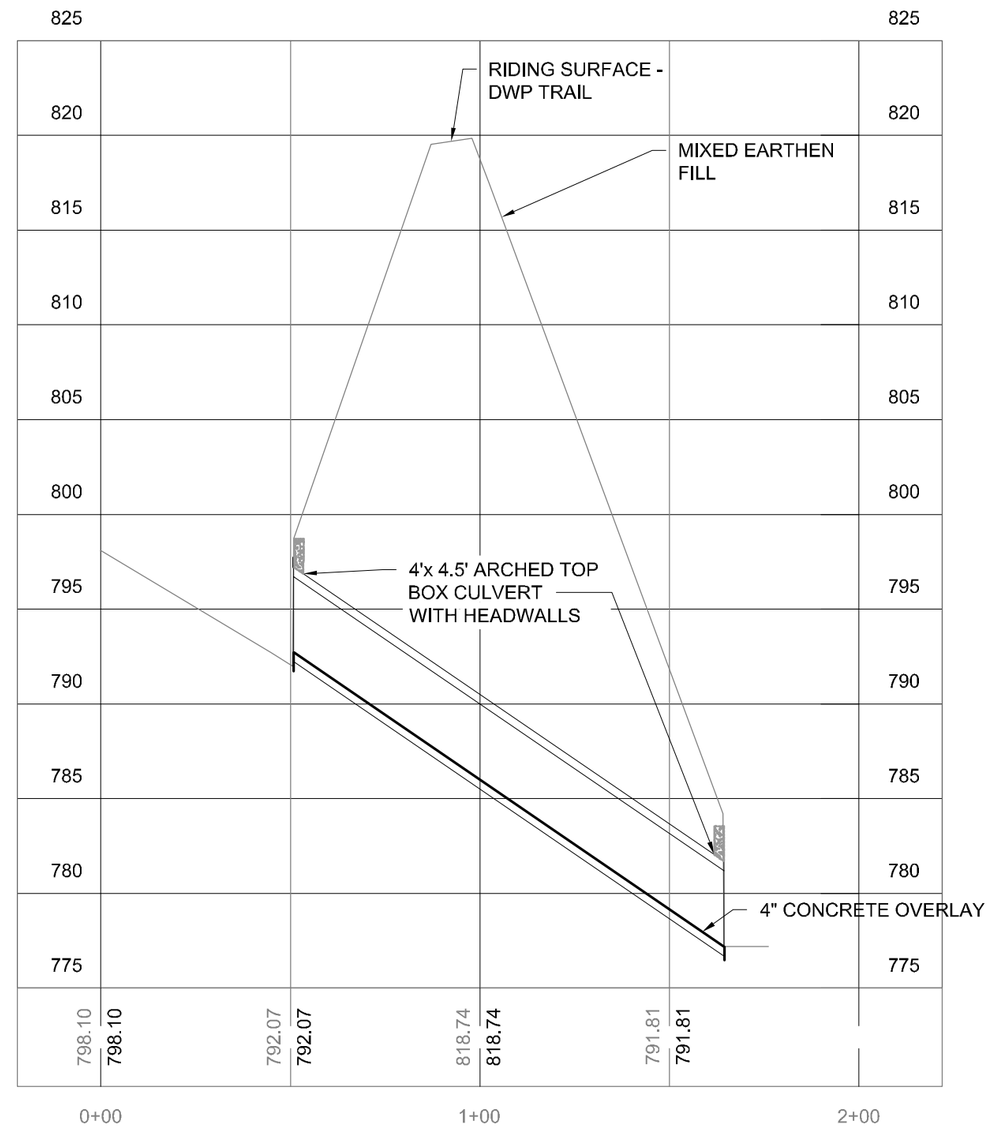

NO.	DATE	BY	DESCRIPTION OF REVISIONS
1	7/27/2017	WD	ISSUED FOR BID

DESIGNED WD
DRAWN WD
CHECKED JG

I HEREBY CERTIFY THAT THIS PLAN WAS PREPARED BY ME OR UNDER MY DIRECT SUPERVISION AND THAT I AM A DULY LICENSED PROFESIONAL ENGINEER UNDER THE LAWS OF THE STATE OF MINNESOTA

WILL D. DEROCHER

DATE JULY 24, 2017 LIC. NO. 54757

TKDA
11 East Superior Street
Suite 420
Duluth, MN. 55802
218.724.8578
tkda.com

STEWART CREEK BRIDGE
DULUTH MINNESOTA

CITY PROJECT NO.
MSA NO.

PLAN & PROFILE
CULVERT REHABILITATION

PROJECT NO. 16346.000
RECORD NO.
SHEET NO. 9

FIELD BOOK:
PLOT DATE: 7/27/2017
Drawing name: K:\duluth_City\16346\000\04_Production\01_CAD\02_Sheets\DWP Culvert Replacement.dwg
Xrefs: Clyde Connector_pMatch_Base

TEMPORARY STREAM DIVERSION SYSTEMS

STREAM TRANSFER PUMP SYSTEM

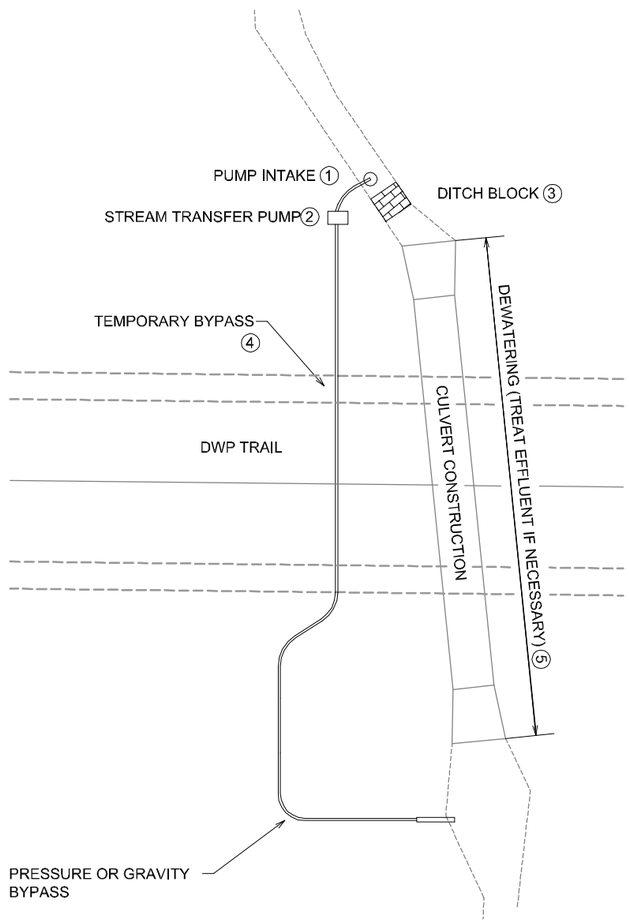

NOTES:

① PUMP INTAKE SHALL UTILIZE A SUMP OR BE FITTED WITH SCREEN AND FLOATING HEAD (PREFERRED).

② STREAM TRANSFER PUMP SHALL BE SIZED FOR BASEFLOW.

③ DITCH BLOCK TO BE A SANDBAG BARRIER AS SHOWN ON TEMPORARY STREAM DITCH BLOCK DETAIL SHEET 10 OR OTHER AS APPROVED BY THE ENGINEER.

④ BYPASS DISCHARGE PIPE TO BE SUSPENDED THROUGH EXISTING CULVERT OR ROUTED OVER DWP TRAIL.

⑤ TREATMENT MAY BE NECESSARY IF WATER BECOMES SEDIMENT LADEN DUE TO CONSTRICTION ACTIVITIES. CONSTRUCT AND DISCHARGED WATER TO TEMPORARY SEDIMENT TRAP.

⑥ DWP WILL BE SUBJECT TO CONSTRUCTION TRAFFIC.

⑦ PAYMENT FOR ITEM NO. 2105.601 TEMPORARY STREAM DIVERSION SYSTEM (LUMP SUM) SHALL INCLUDE ALL ITEMS NECESSARY TO CONSTRUCT A DIVERSION SYSTEM CONFORMING TO THE ABOVE EXAMPLE OR APPROVED EQUAL. A SITE PLAN MUST BE SUBMITTED BY THE CONTRACTOR AND APPROVED BY THE ENGINEER PRIOR TO CONSTRUCTION.

⑧ IF ROUTED THROUGH EXISTING CULVERT, THE CONTRACTOR SHALL SUPPORT OR HANG PUMP DISCHARGE PIPE TO ALLOW CONSTRUCTION OF 4" CONCRETE OVERLAY.

TEMPORARY STREAM DITCH BLOCK

SANDBAG BARRIER

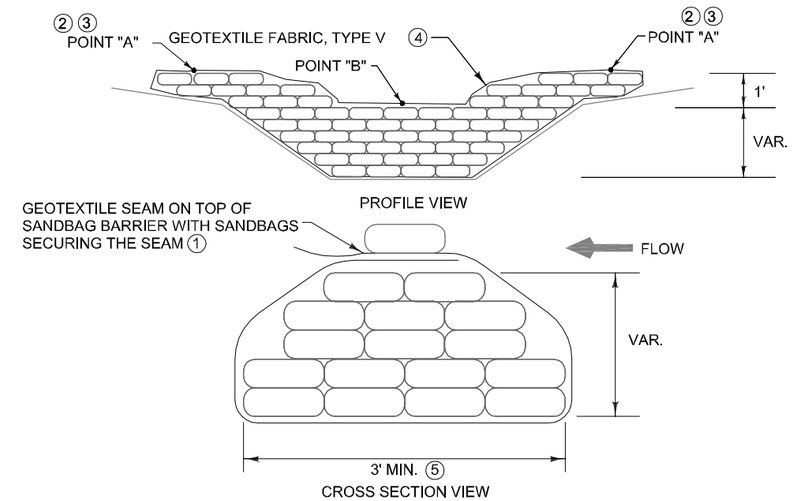

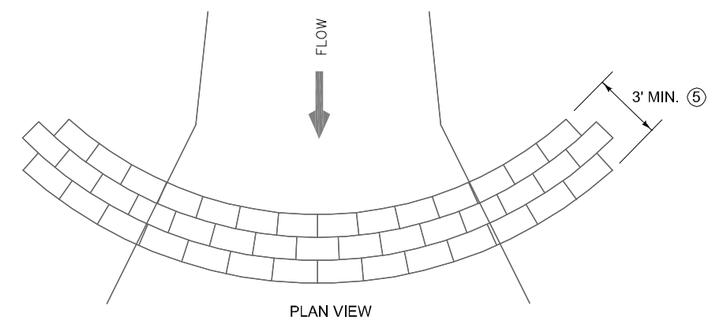

NOTES:

SANDBAG BARRIER SHOULD FOLLOW THE CONTOURS OF THE DITCH BOTTOM AND SIDE SLOPES.

INSTALLATION PROCEDURES:

- LAY THE GEOTEXTILE FABRIC ON THE DITCH BOTTOM AND SIDE SLOPES
- LAYER THE SANDBAGS TO DESIRED WIDTH, LENGTH, AND HEIGHT
- WRAP THE SANDBAGS WITH THE GEOTEXTILE FABRIC
- SECURE SEAM ON DOWNSTREAM SIDE

① SECURELY FASTEN GEOTEXTILE FABRIC AS DIRECTED BY ENGINEER.

② ELEVATION OF EDGES OF SANDBAG BARRIER SHALL BE THE SAME.

③ POINT "A" MUST BE A MINIMUM OF 1' HIGHER THAN POINT "B" TO ENSURE THAT WATER FLOWS OVER THE SANDBAG BARRIER AND NOT AROUND THE ENDS.

④ GEOTEXTILE FABRIC, TYPE V IS INCIDENTAL. TEMPORARY DITCH BLOCK CONSTRUCTION SHALL BE INCIDENTAL.

⑤ WIDER DITCH BLOCK WILL BE NEEDED WHEN UTILIZING A GRAVITY FLOW SYSTEM.

NO.	DATE	BY	DESCRIPTION OF REVISIONS
1	7/27/2017	WD	ISSUED FOR BID

DESIGNED WD | DRAWN WD | CHECKED JG

I HEREBY CERTIFY THAT THIS PLAN WAS PREPARED BY ME OR UNDER MY DIRECT SUPERVISION AND THAT I AM A DULY LICENSED PROFESIONAL ENGINEER UNDER THE LAWS OF THE STATE OF MINNESOTA
WILL D. DEROCHER
DATE JULY 24, 2017 LIC. NO. 54757

TKDA
11 East Superior Street
Suite 420
Duluth, MN. 55802
218.724.8578
tkda.com

STEWART CREEK BRIDGE
DULUTH MINNESOTA

CITY PROJECT NO. | MSA NO.

DETAILS
CULVERT REHABILITATION

PROJECT NO. 16346.000
RECORD NO.
SHEET NO. 10

FIELD BOOK:
PLOT DATE: 7/27/2017
Drawing name: K:\sf\Duluth_City\16346000\04_Production\01_CAD\02_Sheets\DWP Culvert Replacement.dwg
Xrefs: Clyde Connector_Existing_Base

CONCRETE FLOOR OVERLAY

4X4.5 BOX
END WALL

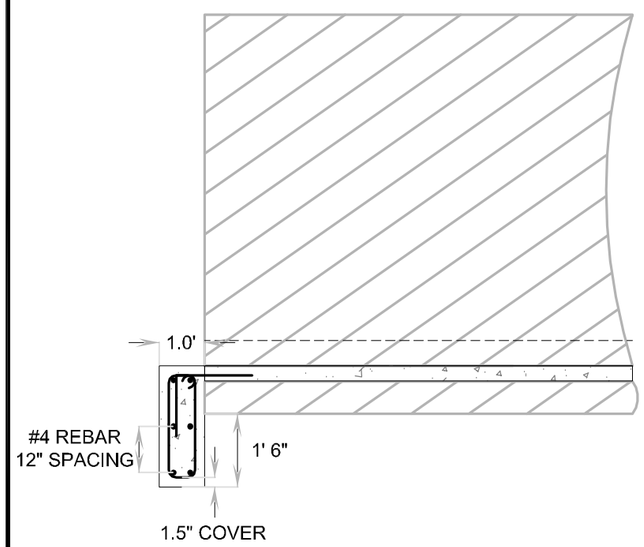

4X4.5 BOX
END VIEW

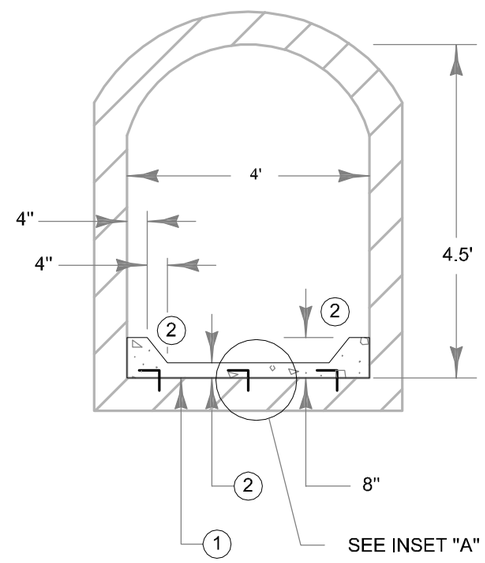

NOTES:

1. SANDBLAST INPLACE BOX CULVERT FLOOR AND REMOVE DEBRIS.
2. OVERLAY BOX CULVERT FLOOR WITH 4" OF CONCRETE MIX 3G52 WITH 1:1 TAPERS ON SIDEWALLS AS DETAILED.
3. ALL LABOR AND MATERIALS TO COMPLETE THE BOX CULVERT FLOOR OVERLAY SHALL BE PAID FOR UNDER ITEMS 2433.602 - GROUTED REINFORCEMENT BARS, 2411.501 STRUCTURAL CONCRETE (3G52) AND 2501.603 CULVERT REPAIR - SPECIAL.
4. F&I - #4 EPOXY COATED REBAR BENT AS SHOWN IN DETAIL AT SPACING TYPICAL TO LAYOUT. DRILL AND GROUT BARS INTO CULVERT FLOOR.
5. QUANTITIES ARE INCLUDED ON THE BOX CULVERT REPAIR CHART.
6. END WALLS TO BE INSTALLED AT EITHER END OF CULVERT.

BOX CULVERT REPAIR QUANTITIES

LOCATION	SIZE	ITEM (SPEC. 2411)	UNIT	QUANTITY (5)
DWP CULVERT	4X4.5	STRUCTURAL CONCRETE (3G52)	CU. YD.	14

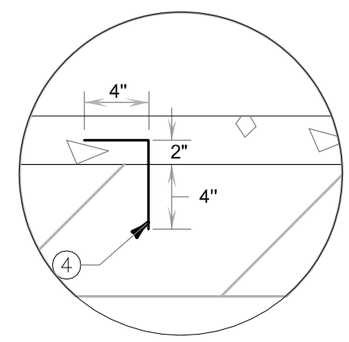

INSET
"A"

FLOOR ANCHOR LAYOUT PLAN VIEW (3)

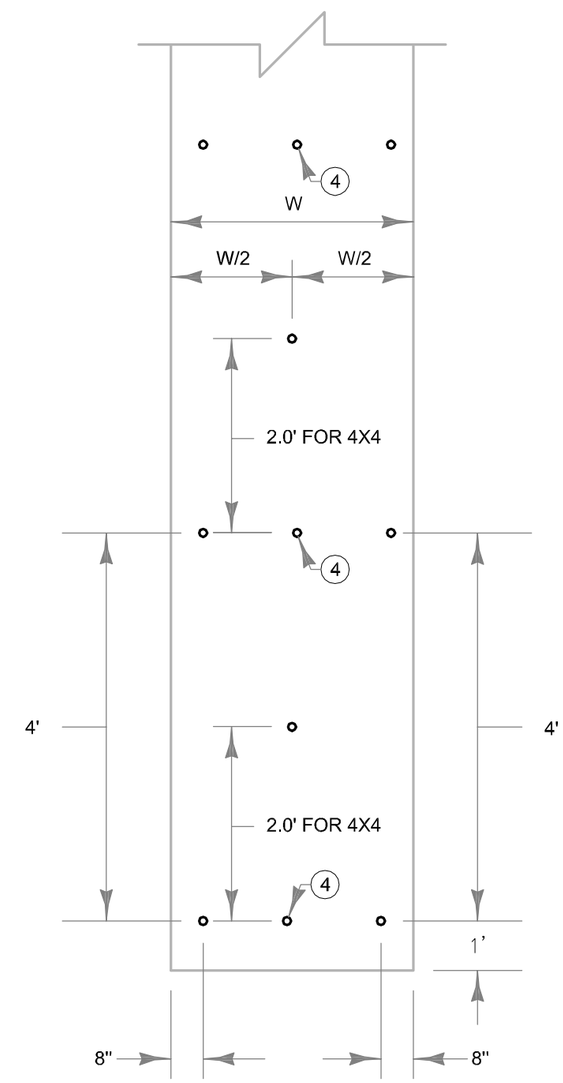

NO.	DATE	BY	DESCRIPTION OF REVISIONS
1	7/27/2017	WD	ISSUED FOR BID

DESIGNED WD
DRAWN WD
CHECKED JG

I HEREBY CERTIFY THAT THIS PLAN WAS PREPARED BY ME OR UNDER MY DIRECT SUPERVISION AND THAT I AM A DULY LICENSED PROFESIONAL ENGINEER UNDER THE LAWS OF THE STATE OF MINNESOTA
WILL D. DEROCHER
DATE JULY 24, 2017 LIC. NO. 54757

TKDA
11 East Superior Street
Suite 420
Duluth, MN. 55802
218.724.8578
tkda.com

STEWART CREEK BRIDGE
DULUTH MINNESOTA

CITY PROJECT NO.
MSA NO.

DETAILS
CULVERT REHABILITATION

PROJECT NO. 16346.000
RECORD NO.
SHEET NO. 11

FIELD BOOK:
PLOT Date: 7/27/2017
Drawing name:K:\duMDuluth_City\163460\004_Production\01_CAD\02_Sheets\DWP CulvertReplacement.dwg
Xrefs: City\ta Connector_Ex\data_Base

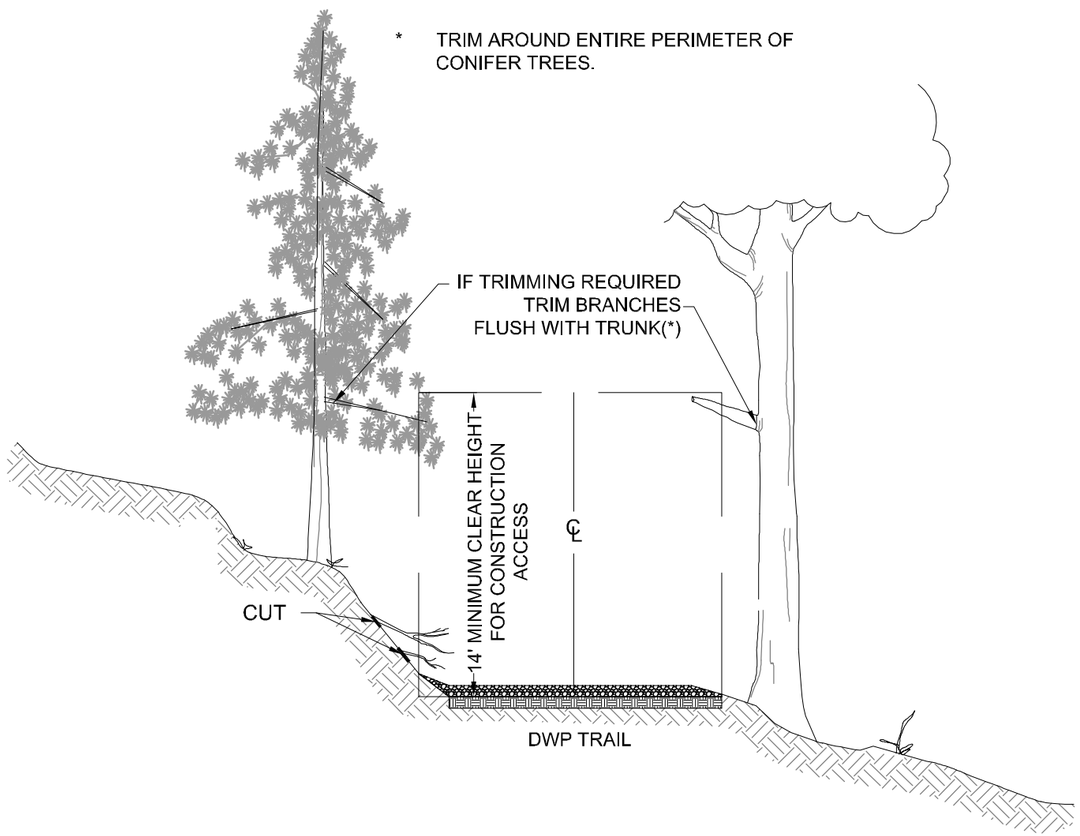

NO.	DATE	BY	DESCRIPTION OF REVISIONS
1	7/27/2017	WD	ISSUED FOR BID

DESIGNED WD DRAWN WD CHECKED JG

I HEREBY CERTIFY THAT THIS PLAN WAS PREPARED BY ME OR UNDER MY DIRECT SUPERVISION AND THAT I AM A DULY LICENSED PROFESIONAL ENGINEER UNDER THE LAWS OF THE STATE OF MINNESOTA

WILL D. DEROCHER

DATE JULY 24, 2017 LIC. NO. 54757

TKDA

11 East Superior Street
Suite 420
Duluth, MN. 55802
218.724.8578
tkda.com

STEWART CREEK BRIDGE
DULUTH MINNESOTA

CITY PROJECT NO. MSA NO.

TREE/ROOT CUTTING DETAIL

PROJECT NO. 16346.000

RECORD NO. SHEET NO. 12

FIELD BOOK:
PLOT DATE: 7/27/2017
Drawing name: K:\drf\Duluth_City\16346000\04_Production\01_CAD\02_Sheets\DWP Culvert Replacement.dwg
Xrefs: Clyde Connector_Existing_Base

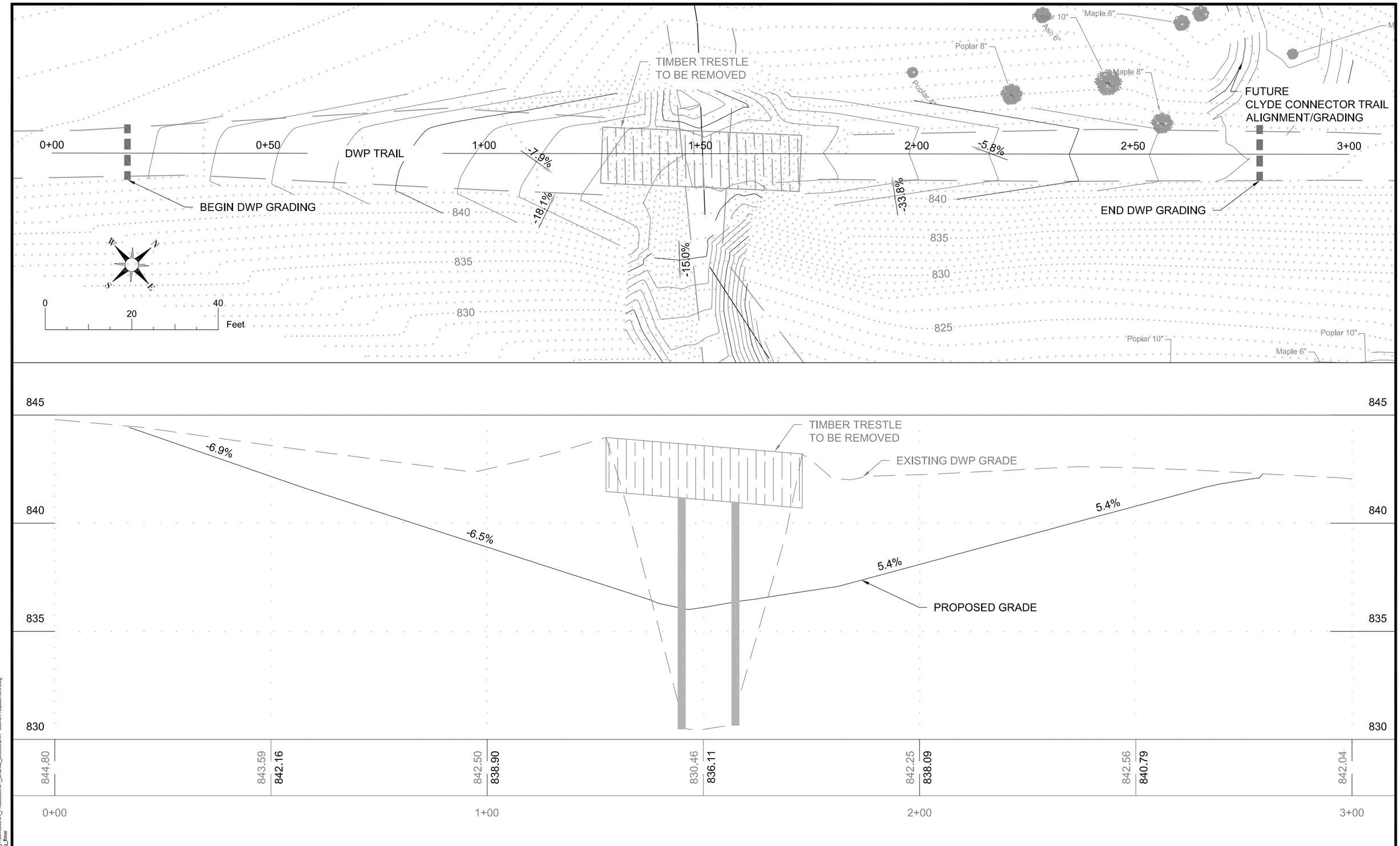

NO.	DATE	BY	DESCRIPTION OF REVISIONS
1	7/27/2017	WD	ISSUED FOR BID

DESIGNED WD
DRAWN WD
CHECKED JG

I HEREBY CERTIFY THAT THIS PLAN WAS PREPARED BY ME OR UNDER MY DIRECT SUPERVISION AND THAT I AM A DULY LICENSED PROFESIONAL ENGINEER UNDER THE LAWS OF THE STATE OF MINNESOTA

WILL D. DEROCHER

DATE JULY 24, 2017 LIC. NO. 54757

TKDA
11 East Superior Street
Suite 420
Duluth, MN. 55802
218.724.8578
tkda.com

STEWART CREEK BRIDGE
DULUTH MINNESOTA

CITY PROJECT NO.
MSA NO.

TIMBER TRESTLE
GRADING - ALT 1

PROJECT NO. 16346.000
RECORD NO.
SHEET NO. 13

FIELD BOOK:
Plot Date: 7/20/2017
Drawing name: K:\a-f\Duluth_City\16346000\04_Production\01_CAD\02_Sheets\DWP Culvert Replacement.dwg
Xrefs:: Clyde Connector_Existing_Base