CITY OF DULUTH

DEPARTMENT OF PUBLIC WORKS AND UTILITIES
ENGINEERING DIVISION

2017 MICHIGAN STREET UTILITY RECONSTRUCTION FROM 1ST AVE WEST TO 3RD AVE WEST

CONSTRUCTION PLANS FOR: WATER MAIN REPLACEMENT, GAS MAIN, ELECTRICAL DUCT BANK, GRADING, AGGREGATE BASE, AND CONCRETE PAVEMENT

LOCATION

WEST MICHIGAN STREET – 1ST AVE. WEST TO 3RD AVE. WEST

CITY OF DULUTH PROJECT NO. 1601

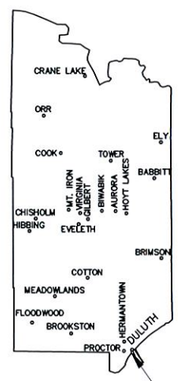

PROJECT LOCATION

ST. LOUIS COUNTY
STATE OF MINNESOTA

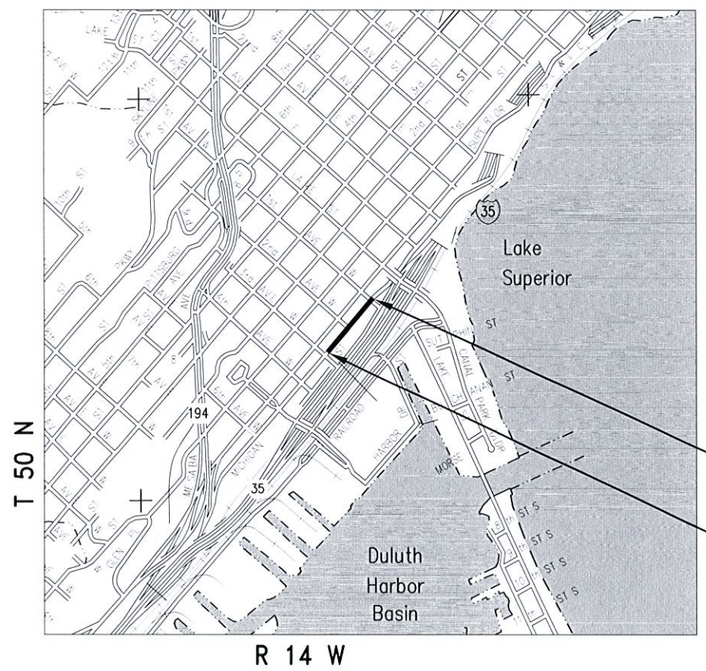

N

COUNTY OF SAINT LOUIS ESTAB. MAR. 1ST 1866

PLAN SYMBOLS

SECTION SUBDIVISION LINE
EXISTING R/W
PERMANENT EASEMENT
TEMPORARY EASEMENT
RAILROAD R/W
PROPERTY LINE
ALIGNMENT STATIONS (100+00, 101+00)
ALIGNMENT POINTS
ENTRANCE
BUILDING (NO. 1 S-F HO)
ORNAMENTAL FENCE
RETAINING WALL
GUARDRAIL (W-BEAM)
WOODS OR BRUSH, NURSERY
DECIDUOUS TREES
CONIFER (EVERGREEN) TREES
BUSH OR SHRUB
MONUMENT (CI, ACT, ACP, BCP, ...)
CONCRETE OR STONE MONUMENT
IRON PIPE
IRON PIN OR REBAR
IRON PIN WITH BRASS DISK
NAIL, PK NAIL, SPIKE, SFP, T-BAR, ...
VERTICAL CONTROL (B.M.)
HORIZONTAL CONTROL
POWER POLE
LIGHT POLE
LIGHT AND TELEPHONE POLE
LIGHT, TELEPHONE AND POWER POLE
GUY POLE (GP)
POLE ANCHOR
TELEPHONE POLE
TELEPHONE AND POWER POLE
UNDERGROUND CABLE PEDESTAL (PED)
TELEPHONE MANHOLE (VAULT) (MH)
TRAFFIC SIGNAL LIGHT
HAND HOLE (HH)
CULVERT
CULVERT WITH APRONS
DUCT BANK (ELEC)
BURIED ELECTRIC CABLE (E-BUR)
BURIED FIBER OPTIC CABLE (FO-BUR)
BURIED TELEPHONE CABLE (T-BUR)
SANITARY MAIN
SANITARY SERVICE (LAT)
STORM SEWER LINE
WATER MAIN
WATER SERVICE (W)
GAS MAIN
GAS SERVICE (GS)
STEAM
HOT WATER SUPPLY (HWS)
HOT WATER RETURN (HWR)
WATER SHUT-OFF VALVE (WV)
VALVE
FIRE HYDRANT
CATCH BASIN (CB)
STORM MANHOLE (SMH)
ELECTRICAL MANHOLE / VAULT (EMH)
SANITARY MANHOLE (SMH NUM)
STEAM MANHOLE (STMH NUM)
TELE-COMMUNICATIONS MANHOLE
INLET PROTECTION
ROCK LOG (CR)
SOIL BORING (SB-M1)

UTILITY NOTE

THE SUBSURFACE UTILITY INFORMATION IN THIS PLAN IS UTILITY QUALITY LEVEL D. THIS UTILITY QUALITY LEVEL WAS DETERMINED ACCORDING TO THE GUIDELINES OF CI/ ASCE 38-02, ENTITLED "STANDARD GUIDELINES FOR THE COLLECTION OF EXISTING SUBSURFACE UTILITY DATA".

SCALES

PLAN	20 ft.	
PROFILE	20 ft. HORIZ.	10 ft. VERT.
INDEX MAP	1000 ft.	

CITY OF DULUTH BID # 2017-0245

LHB
PERFORMANCE DRIVEN DESIGN.
LHBcorp.com
21 W. Superior St., Ste. 500 | Duluth, MN 55802 | 218.727.8446

PLAN REVISIONS

DATE	SHEET NO.	APPROVED BY

GOVERNING SPECIFICATIONS

THE 2016 EDITION OF THE MINNESOTA DEPARTMENT OF TRANSPORTATION "STANDARD SPECIFICATIONS FOR CONSTRUCTION" SHALL GOVERN.

THE 2017 EDITION OF THE CITY OF DULUTH PUBLIC WORKS AND UTILITIES DEPARTMENT STANDARD CONSTRUCTION SPECIFICATIONS AND SUPPLEMENTS OR ADDENDUMS SHALL APPLY. AVAILABLE AT:
http://www.duluthmn.gov/engineering/standard-construction-specifications/

ALL TRAFFIC CONTROL DEVICES AND SIGNING SHALL CONFORM TO THE MN MUTCD, INCLUDING THE FIELD MANUAL DATED JANUARY 2014.
http://www.dot.state.mn.us/trafficeng/publ/fieldmanual/index.html

INDEX OF SHEETS

SHEET NO.	DESCRIPTION
1	TITLE SHEET
2	GENERAL LAYOUT
3	STATEMENT OF ESTIMATED QUANTITIES AND NOTES
4	STANDARD PLATES & NOTES
5–8	TYPICAL SECTIONS
9–12	CONSTRUCTION PLAN & PROFILE
13–17	TEMPORARY WATER SERVICE SYSTEM
18–23	TRAFFIC CONTROL & SEQUENCING PLAN
24–25	EXISTING CONDITIONS & REMOVALS
26–29	EROSION & SEDIMENT CONTROL PLANS
30–31	CONCRETE PAVING PLAN
32–49	CONSTRUCTION DETAILS

– THIS PLAN CONTAINS 49 SHEETS –

WARNING

LOCATION OF ALL UNDERGROUND UTILITIES SHALL BE VERIFIED BY THE CONTRACTOR.
CALL BEFORE DIGGING

MINNESOTA ONE-CALL SYSTEM
1-800-252-1166
REQUIRED BY MN STATUTE 216D

DESIGNERS: (LHB) S. Hohenstein

I HEREBY CERTIFY THAT THIS PLAN WAS PREPARED BY ME OR UNDER MY DIRECT SUPERVISION AND THAT I AM A DULY LICENSED PROFESSIONAL ENGINEER UNDER THE LAWS OF THE STATE OF MINNESOTA.

PRINT NAME: BRADFORD P. SCOTT
SIGNATURE: Brad Scott
DATE: 2/23/2017 LIC. #: 46198

CITY APPROVAL

APPROVED — CHIEF ENGINEER OF TRANSPORTATION — DATE 02/24/17

APPROVED — CHIEF ENGINEER OF UTILITIES — DATE 2-24-17

APPROVED — CITY ENGINEER — DATE 2-24-17

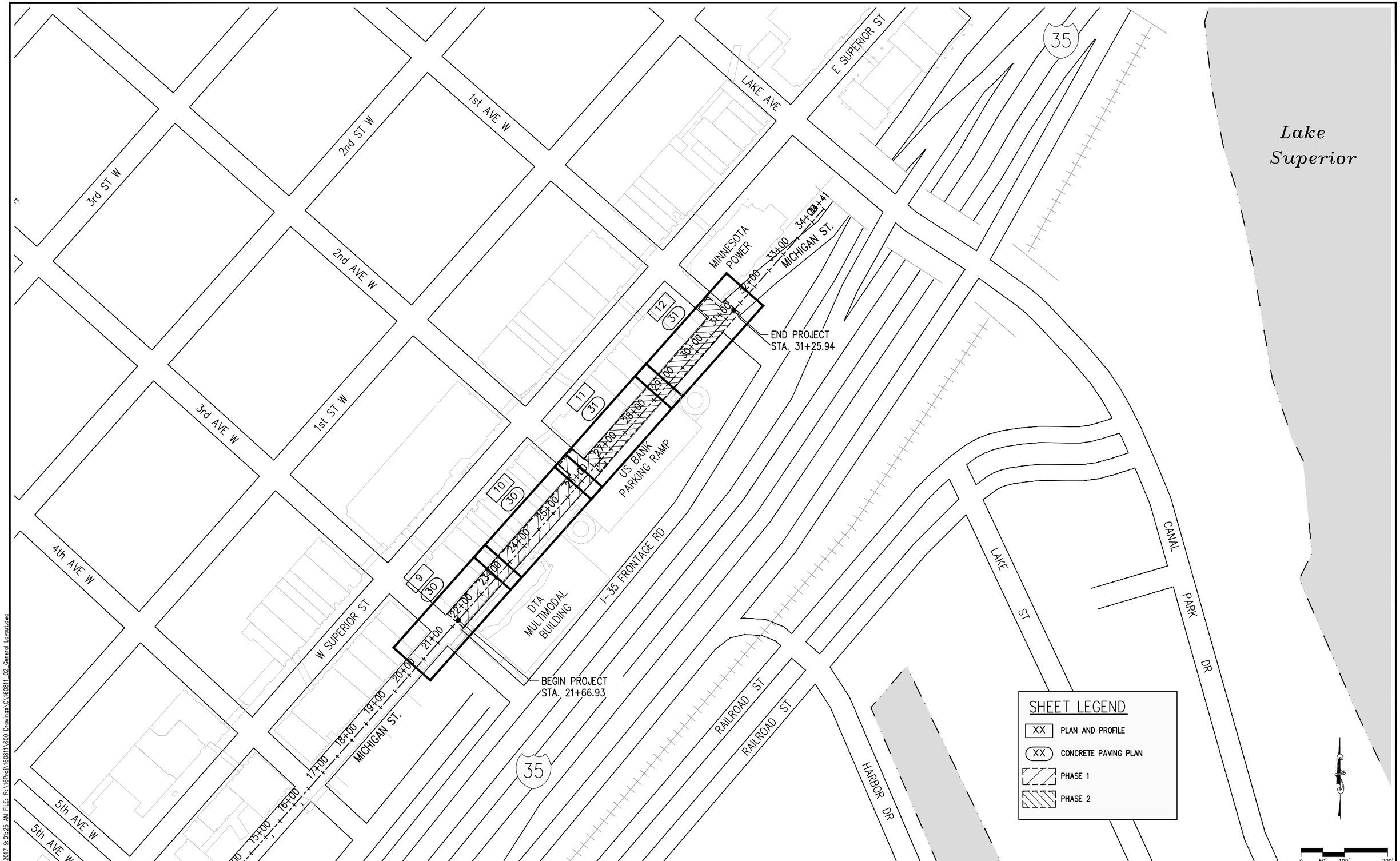

I HEREBY CERTIFY that this plan, specification or report was prepared by me or under my direct supervision and that I am a duly Licensed Professional Engineer under the laws of the State of Minnesota.

BRAD SCOTT
PRINTED NAME

SIGNATURE

02-23-17
DATE

46198
LIC. NO.

MICHIGAN ST. 3RD–1ST AVE WEST

LHB PROJECT NO. 160811

CITY PROJECT NO. 1601

GENERAL LAYOUT

SHEET NO. 2 OF 49 SHEETS

PLOT DATE: 2/24/2017 9:01:25 AM FILE: R:\16Proj\160811\600 Drawings\C\160811_02_General Layout.dwg

STATEMENT OF ESTIMATED QUANTITIES

LINE	NOTES	SHEET	SPEC. NO.	DESCRIPTION	UNIT	TOTAL PROJECT FINAL QUANTITY	DUCT BANK ESTIMATED QUANTITY	WATER & GAS ESTIMATED QUANTITY
1								
2			2021.501	MOBILIZATION	LUMP SUM	1	0.36	0.64
3								
4		24–25	2104.501	REMOVE CURB & GUTTER	LIN FT	632		632
5	13	24–26	2104.501	REMOVE GAS MAIN	LIN FT	923		923
6	17	24–27	2104.501	REMOVE WATER MAIN (P)	LIN FT	895		895
7		24–28	2104.503	REMOVE SIDEWALK	SQ FT	622	234	388
8	11	24–29	2104.505	REMOVE BITUMINOUS PAVEMENT (P)	SQ YD	75		75
9		24–30	2104.505	REMOVE CONCRETE PAVEMENT (P)	SQ YD	2 228	1 556	672
10	20	24–31	2104.509	REMOVE HYDRANT	EACH	2		2
11		24–32	2104.511	SAWING CONCRETE PAVEMENT (FULL DEPTH)	LIN FT	5 370	2 200	3 170
12								
13	3	5–8	2105.501	COMMON EXCAVATION (P)	CU YD	1 039	752	287
14	14		2105.503	ROCK EXCAVATION (TRENCH)	CU YD	60		60
15	5	5–8	2105.522	SELECT GRANULAR BORROW MOD 7% (CV) (P)	CU YD	779	564	215
16								
17		5–8	2211.503	AGGREGATE BASE (CV) CLASS 5 (P)	CU YD	260	188	72
18								
19	2, 11	30–31	2301.504	CONCRETE PAVEMENT 8.0" (P)	SQ YD	2 227	1 610	617
20	19	30–32	2301.538	DOWEL BAR	EACH	1 105	772	333
21		30–33	2301.602	DRILL AND GROUT DOWEL BAR (EPOXY COATED)	EACH	210	82	128
22		30–34	2301.602	DRILL AND GROUT REINFORCEMENT BAR (EPOXY COATED)	EACH	1 037	797	240
23	7	30–35	2301.508	SUPPLEMENTAL PAVEMENT REINFORCEMENT	LB	2 753	1 721	1 032
24								
25	20	10–11	2502.602	HYDRANT ASSEMBLY	EACH	2		2
26								
27	21	12, 17	2503.603	36" STEEL CASING PIPE	LIN FT	12		12
28								
29		14–17	2504.601	TEMPORARY WATER SERVICE SYSTEM	LUMP SUM	1		1
30	6,10	9–12	2504.602	RECONNECT WATER SERVICE	EACH	13		13
31	10	9–12, 17	2504.602	CONNECT TO EXISTING WATER MAIN	EACH	4		4
32	9	9–12	2504.602	INSTALL 20" X 4" ELECTROFUSION BRANCH SADDLE	EACH	2		2
33	9	9–12	2504.602	INSTALL 20" X 6" ELECTROFUSION BRANCH SADDLE	EACH	10		10
34	9	9–12	2504.602	INSTALL 20" X 8" ELECTROFUSION BRANCH SADDLE	EACH	3		3
35	10	11	2504.602	12" BUTTERFLY VALVE AND BOX	EACH	1		1
36	10	9,11	2504.602	20" BUTTERFLY VALVE AND BOX	EACH	2		2
37	10	9–12	2504.602	4" GATE VALVE AND BOX	EACH	2		2
38	10	9–12	2504.602	6" GATE VALVE AND BOX	EACH	8		8
39	10	9–12	2504.602	8" GATE VALVE AND BOX	EACH	3		3
40		9–12	2504.602	WATER TRACER BOX	EACH	13		13
41		9–12	2504.602	VALVE BOX EXTENSION	EACH	4		4
42	20	9–12	2504.603	6" HDPE SDR 11 SERVICE PIPE	LIN FT	30		30
43	10	9–12	2504.603	8" DIPS HDPE WATER MAIN SDR 11	LIN FT	30		30
44	10	9–12	2504.603	20" DIPS HDPE WATER MAIN SDR 11	LIN FT	894		894
45								
46		9–12	2505.601	6" PE GAS VALVE AND BOX	EACH	2		2
47		9–12	2505.602	RECONNECT TO EXISTING GAS MAIN	EACH	2		2
48	15	9–12	2505.603	GAS SERVICE (1" PE SDR 11.5)	LIN FT	140		140
49	22	9–12	2505.603	GAS MAIN (6" PE SDR 11.5)	LIN FT	956		956
50								

STATEMENT OF ESTIMATED QUANTITIES

LINE	NOTES	SHEET	SPEC. NO.	DESCRIPTION	UNIT	TOTAL PROJECT FINAL QUANTITY	DUCT BANK ESTIMATED QUANTITY	WATER & GAS ESTIMATED QUANTITY
51								
52	18	30–31	2506.516	CASTING ASSEMBLY	EACH	20	17	3
53		30–31	2506.602	ADJUST FRAME AND RING CASTING	EACH	13	10	3
54								
55	16	9–12	2521.501	4" CONCRETE WALK	SQ FT	388		388
56								
57	8	9–12	2531.501	CONCRETE CURB AND GUTTER DESIGN B612	LIN FT	632		632
58		11	2531.507	8" DRIVEWAY PAVEMENT	SQ YD	234	234	
59								
60		9–12	2550.602	CONNECT INTO EXISTING ELECTRICAL MANHOLE	EACH	10	10	
61		42	2550.602	REPAIR ELECTRICAL MANHOLE – 19	LUMP SUM	1	1	
62		43	2550.602	REPAIR ELECTRICAL MANHOLE – 20	LUMP SUM	1	1	
63		44	2550.602	REPAIR ELECTRICAL MANHOLE – 21	LUMP SUM	1	1	
64		47	2550.602	REPAIR ELECTRICAL MANHOLE – 24	LUMP SUM	1	1	
65		48	2550.602	REPAIR ELECTRICAL MANHOLE – 25	LUMP SUM	1	1	
66		49	2550.602	REPAIR ELECTRICAL MANHOLE – 26	LUMP SUM	1	1	
67		45	2550.602	REPAIR ELECTRICAL MANHOLE – 1281	LUMP SUM	1	1	
68		9–12	2550.603	DUCT BANK (P)	LIN FT	686	686	
69								
70		18–23	2563.601	TRAFFIC CONTROL	LUMP SUM	1	0.36	0.64
71								
72		26–29	2573.530	STORM DRAIN INLET PROTECTION	EACH	21	21	
73	4	26–29	2573.533	SEDIMENT CONTROL LOG TYPE ROCK	LIN FT	50	50	
74								
75	12		2582.502	12" SOLID LINE WHITE–EPOXY	LIN FT	15	15	
76								

(P) DENOTES PLAN QUANTITY.

NOTES

1. REFER TO SPECIAL PROVISIONS FOR ADDITIONAL INFORMATION AND REQUIREMENTS.
2. PROVIDE HIGH EARLY CONCRETE MIX 3A41HE.
3. EXCESS MATERIAL SHALL BE DISPOSED OF OFF PROJECT RIGHT–OF–WAY (INCIDENTAL).
4. STORM DRAIN INLET PROTECTION TO BE PAID FOR ONCE AT EACH LOCATION REGARDLESS OF QUANTITY USED AT EACH LOCATION OR MAINTENANCE REQUIRED AT EACH LOCATION..
5. MODIFIED SUCH THAT THE PERCENTAGE PASSING THE #200 SIEVE SHALL NOT EXCEED 7%..
6. INCLUDES REMOVAL OF EXISTING SERVICE PIPE AS REQUIRED TO COMPLETE WORK.
7. FOR PAVEMENT REINFORCEMENT. REFER TO STANDARD PLATE 1070.
8. CONFIRM CURB REMOVAL AND REPLACE LIMITS BASED ON FIELD REVIEW OF TRENCH CONDITIONS.
9. SHALL BE FURNISHED BY CITY OF DULUTH F.O.B. GARFIELD AVENUE FOR INSTALLATION BY CONTRACTOR.
10. HDPE AND DUCTILE IRON FITTINGS, TRANSITION COUPLINGS, AND ADAPTERS SHALL BE INCIDENTAL.
11. REMOVE EXISTING BITUMINOUS PAVEMENT AND PLACE CONCRETE PAVEMENT FOR PANEL REPAIR AS DIRECTED BY ENGINEER. BASIS OF QUANTITY IS 1 LOCATION WITH A TOTAL OF 75 SQUARE YARDS OF PAVEMENT AND REMOVALS. SEE SHEET 23.
12. PROVIDE TO MATCH INPLACE CROSSWALK STRIPING.
13. REMOVAL AS REQUIRED TO RECONSTRUCT WATER OR DUCT BANK. PROVIDE PE JUMPER WHERE MAIN IS REMOVED (INCIDENTAL). MAXIMUM LENGTH OF JUMPER SHALL BE 20 FT. CONNECT TO EXISTING STORM OR CATCH BASIN AS NEEDED (INCIDENTAL).
14. ROCK EXCAVATION SHALL BE BY MECHANICAL METHODS ONLY. BLASTING IS NOT PERMITTED.
15. PROVIDE HYDRAULIC EXCAVATION FOR GAS SERVICES. FULLY SUPPORT CROSSING INPLACE UTILITIES. BACKFILL EXCAVATION WITH ⅜" MINUS PEA GRAVEL TO BOTTOM OF ROADWAY SELECT GRANULAR OR AS DIRECTED BY ENGINEER. HYDRAULIC EXCAVATION AND PEA GRAVEL SHALL BE CONSIDERED INCEDENTAL.
16. INCLUDES 4" BASE.
17. INCLUDES VALVE & SERVICE PIPE REMOVAL AS REQUIRED.
18. PROVIDE (7) EACH COVER AND CASTING FOR STORM MANHOLE PER CITY DETAIL STRM–1. PROVIDE (1) EACH COVER AND CASTING FOR SANITARY MANHOLE PER CITY DETAIL SAN–1. PROVIDE (10) EACH ELECTRICAL MANHOLE (MATCH EXISTING), INCLUDES FRAME, RINGS AND CASTING. PROVIDE (2) EACH FIBER OPTICS MANHOLE (MATCH EXISTING), INCLUDES FRAME, RINGS AND CASTING.
19. EPOXY COATED.
20. PROVIDE HYDRALIC EXCAVATION AND ⅜" PEA GRAVEL BACKFILL FOR HYDRANT AS NEEDED (INCIDENTAL).
21. SEAL ENDS AND FILL WITH SAND.
22. GAS MAIN FITTINGS, COUPLINGS ARE INCIDENTAL.

PLOT DATE: 2/24/2017 9:01:31 AM FILE: R:\16Proj\160811\600 Drawings\C\160811_03_SEQ & Notes.dwg

I HEREBY CERTIFY that this plan, specification or report was prepared by me or under my direct supervision and that I am a duly Licensed Professional Engineer under the laws of the State of Minnesota.

BRAD SCOTT
PRINTED NAME

SIGNATURE

02-23-17
DATE

46198
LIC. NO.

MICHIGAN ST. 3RD–1ST AVE WEST

LHB PROJECT NO. 160811

CITY PROJECT NO. 1601

STATEMENT OF ESTIMATED QUANTITIES & NOTES

GENERAL CONSTRUCTION NOTES

1. WITHIN THE PLAN WHENEVER THE WORD "INCIDENTAL" IS USED IT SHALL MEAN NO DIRECT PAYMENT WILL BE MADE FOR THAT ITEM.
2. CONTRACTOR SHALL PROTECT FROM DAMAGE ALL EXISTING PAVEMENTS AND CURB DESIGNATED TO REMAIN. ANY PAVEMENTS OR CURBS DAMAGED BY THE CONTRACTOR SHALL BE REPAIRED BY THE CONTRACTOR AT NO COST TO THE OWNER.
3. GRADES SHOWN ARE FINISH SURFACE ELEVATIONS. THE CONTRACTOR SHALL MAKE APPROPRIATE DEDUCTIONS FOR VARYING SURFACES TO DETERMINE SUBGRADE ELEVATIONS.
4. ALL EXISTING AND PROPOSED STRUCTURE ACCESS COVERS SHALL BE ADJUSTED TO FINISHED GRADE BY THE CONTRACTOR.
5. ALL CONCRETE TRUCKS SHALL WASH OUT WITHIN THE PROJECT LIMITS AWAY FROM ANY WATERS OF THE STATE (INCLUDING HIGHWAY DITCHES), AT A LOCATION SPECIFIED BY THE ENGINEER. HARDENED CONCRETE MUST BE REMOVED FROM THE PROJECT LIMITS AND PROPERLY DISPOSED OF OFF MN/DOT R/W (INCIDENTAL).
6. WHENEVER THE PHRASE "MIN." IS USED IN THIS PLAN, IT SHALL MEAN THE WORD MINIMUM.
7. THE RIGHT-OF-WAY SHOWN IN THE PLAN GIVES A GRAPHICAL LOCATION WITH RESPECT TO THE GEOMETRIC LOCATION.
8. CONSTRUCTION DEWATERING, IF REQUIRED, SHALL BE CONSIDERED INCIDENTAL WITH NO ADDITIONAL COMPENSATION THEREFOR. THE CONTRACTOR SHALL BE RESPONSIBLE FOR OBTAINING ANY PERMITS AND COMPLYING WITH ALL APPLICABLE LOCAL, STATE, AND FEDERAL REGULATIONS.
9. THE CONTRACTOR SHALL COORDINATE THE WORK WITH OTHER PROJECTS IN THE DOWNTOWN AREA INCLUDING PLANNED BUILDING IMPROVEMENTS AT THE WELLS FARGO CENTER WHICH INCLUDES EXTERIOR BUILDING AND SIDEWALK WORK.

GRADING, BASE, & SURFACE

1. UNSUITABLE MATERIALS ARE TOPSOILS, DEBRIS, PEAT, MUCK AND ORGANIC OR OTHER UNSTABLE SOILS.
2. SELECT GRANULAR MATERIAL MOD. 7% IS DEFINED AS SELECT GRANULAR BORROW PER MnDOT SPECIFICATION 3149.B2 MODIFIED SUCH THAT THE RATIO OF THE PORTION PASSING THE #200 SIEVE DIVIDED BY THE PORTION PASSING THE 1 INCH SIEVE MAY NOT EXCEED 7 PERCENT BY MASS.
3. ALL GRANULAR MATERIAL, SELECT GRANULAR MATERIAL, SELECT GRANULAR MOD. 7%, AND AGGREGATE BASE, SHALL BE COMPACTED BY THE SPECIFIED DENSITY METHOD.
4. THE BOTTOM OF ALL EXCAVATIONS SHALL BE SHAPED AND COMPACTED.
5. BITUMINOUS, CONCRETE, AND ALL SUBSURFACE SOILS DISTURBED BY CONSTRUCTION SHALL BECOME PROPERTY OF THE CONTRACTOR. THIS MATERIAL MAY BE RECYCLED AND REUSED, TO THE EXTENT ALLOWED BY MN/DOT SPECIFICATIONS AND THESE RECOMMENDATIONS OR SHALL BE DISPOSED OF OUTSIDE MN/DOT RIGHT OF WAY IN ACCORDANCE WITH MN/DOT SPECIFICATION 2104.
6. THE CONTRACTOR SHALL NOT STORE EXCAVATED MATERIAL OUTSIDE THE PLANNED CONSTRUCTION LIMITS UNLESS APPROVED BY THE ENGINEER.
7. PROVIDE A SAWCUT WHERE PLACING NEW PAVEMENT ADJACENT TO INPLACE PAVEMENT TO ENSURE A UNIFORM JOINT.

ELECTRICAL CONDUIT AND MANHOLE NOTES

1. ALL CONDUIT AND MANHOLE INSTALLATION SHALL CONFORM TO THE APPLICABLE MnDOT, NECA/NEIS AND NEMA STANDARDS.
2. PROVIDE CONDUIT CONNECTIONS TO PROPOSED MANHOLES/VAULTS IN ACCORDANCE WITH MANHOLE/VAULT MANUFACTURER'S RECOMMENDATIONS.
3. INSTALL CONDUIT TO LOCATE TOP OF CONDUIT AT DEPTHS AS INDICATED ON DRAWINGS.
4. JOIN CONDUIT USING ADHESIVE AS RECOMMENDED BY MANUFACTURER. MINNESOTA POWER SHALL SUPPLY ADHESIVE.
5. CONTRACTOR SHALL NOTIFY MINNESOTA POWER TO OBTAIN ENTRY TO MANHOLES. MP PERSONNEL MUST BE ON SITE WHEN WORK IS PERFORMED IN MANHOLES.

UTILITIES

1. THE CONTRACTOR IS HEREBY REMINDED OF HIS RESPONSIBILITY UNDER STATE LAW TO CONTACT ALL UTILITIES THAT MAY HAVE FACILITIES IN THE AREA. CONTACT MUST BE MADE THROUGH GOPHER STATE ONE-CALL.
2. THE SUBSURFACE UTILITY INFORMATION IN THIS PLAN IS UTILITY QUALITY LEVEL "D". THIS UTILITY QUALITY LEVEL WAS DETERMINED ACCORDING TO THE GUIDELINES OF CI/ASCE 38-02, ENTITLED "STANDARD GUIDELINES FOR THE COLLECTION AND DEPICTION OF EXISTING SUBSURFACE UTILITY DATA."
3. THE FOLLOWING UTILITIES HAVE FACILITIES WITHIN THE PROJECT LIMITS:
   - CENTURYLINK
   - CHARTER COMMUNICATIONS
   - CITY OF DULUTH
   - COMPUDYNE
   - CONSOLIDATED COMMUNICATIONS (FORMERLY KNOWN AS, NESC)
   - DULUTH ENERGY SYSTEMS
   - MINNESOTA POWER
   - PAUL BUNYAN TELEPHONE
   - ZAYO BANDWIDTH
4. THE CONTRACTOR IS REQUIRED TO FULLY SUPPORT ANY EXISTING UTILITIES ENCOUNTERED DURING THE EXCAVATION TO PREVENT DAMAGE TO THE INPLACE UTILITY. ANY EXPOSED UTILITY SHALL BE REBEDDED IN CLEAN, COMPACTIBLE SAND OR AS REQUIRED BY THE FACILITY OWNER. THE CONTRACTOR IS RESPONSIBLE FOR VERIFYING THE SUPPORT AND BACKFILL REQUIREMENTS OF INPLACE UTILITIES. ALL COST OF COORDINATING THE CONSTRUCTION OF THE WORK IN THE VICINITY OF EXISTING UTILITIES TO REMAIN INCLUDING EXPOSING, SUPPORTING (BRACING OR SHORING), WORKING AROUND, AND BACKFILL SHALL BE CONSIDERED INCIDENTAL.
5. ANY ROADWAY SUBDRAIN PIPE ENCOUNTERED DURING THE WORK THAT IS REMOVED TO CONSTRUCT THE WORK SHALL BE REPLACED TO ITS EXISTING CONFIGURATION AND ALIGNMENT AT NO ADDITIONAL COST (INCIDENTAL).
6. MINOR RELOCATION OR ADJUSTMENT OF BURIED TELEPHONE OR POWER TO ACCOMMODATE THE DUCT BANK IS ANTICIPATED BUT SHALL NOT RELIEVE THE CONTRACTOR OF HIS RESPONSIBILITY TO SUPPORT, COORDINATE AND WORK AROUND EXISTING FACILITIES AT DESCRIBED IN NOTE 4 OF THIS SECTION.

REMOVALS

1. PROVIDE FOR THE REMOVAL AND DISPOSAL OF ANY INPLACE SURFACING, OTHER STRUCTURES OR DEBRIS THAT WOULD INTERFERE WITH CONSTRUCTION. ALL SUCH MATERIALS SHALL BECOME THE PROPERTY OF THE CONTRACTOR UNLESS NOTED OTHERWISE AND SHALL EITHER BE RECYCLED TO THE EXTENT ALLOWED OR DISPOSED OF OFF THE RIGHT OF WAY IN ACCORDANCE WITH Mn/DOT SPECIFICATION 2104.
2. UNLESS A PAY ITEM IS PROVIDED THEREFOR, REMOVAL OF MISCELLANEOUS ABANDONED UTILITIES AND MATERIAL ENCOUNTERED DURING THE WORK SHALL BE INCIDENTAL.

STANDARD PLATES

PLATE NO.	DESCRIPTION
MNDOT STANDARD PLATES – THE FOLLOWING STANDARD PLATES, APPROVED BY THE FEDERAL HIGHWAY ADMINISTRATION SHALL APPLY ON THIS JOB	
1070M	SUPPLEMENTAL PAVEMENT REINFORCEMENT
1103K	TYPICAL DOWEL BAR ASSEMBLY (2 SHEETS)
4110F	COVER CASTING FOR MANHOLE (FOR USE IN ALL TRAFFIC AREAS) – CASTING NO. 715 AND 716
8000I	STANDARD BARRICADES

CITY STANDARD DETAILS

DETAIL NO.	DESCRIPTION
THE FOLLOWING CITY OF DULUTH STANDARD DETAILS SHALL APPLY ON THIS JOB	
EX-1	DUCTILE IRON, PE WATERMAIN, PRESSURE SEWER, & FORCEMAIN BEDDING
EX-2	ALL STEEL & 4" AND LARGER PE GAS MAIN BEDDING
G-5	PE VALVE BOX SETTING
STR-5	DRIVEWAY & ALLEY ENTRANCES
SAN-1	SANITARY CASTING DETAIL
STRM-1	STORM MANHOLE CASTING
STRM-3	CATCH BASIN CASTINGS
STRM-7	GUTTER STAMP
W-4A	FIRE HYDRANT SETTING DETAIL – HDPE
W-17A	WATER VALVE BOX – HDPE MAIN
W-18	ANODE CONNECTION
W-19	CONCRETE ENCASED VALVE BOX COLAR IN ROADWAY

NOTES:

1. THE TYPICAL DUCT BANK CONSISTS OF (6) 6" CONDUITS IN A 2X3 ARRAY (ROW X COL.). RE-ARRANGEMENT OF THE DUCT BANK ARRAY IS REQUIRED AT CONNECTIONS TO EXISTING MANHOLES AND MAY BE REQUIRED AT UTILITY CROSSINGS OR IF OTHER OBSTRUCTIONS ARE ENCOUNTERED. NO CHANGE ORDERS OR MODIFICATIONS TO THE UNIT PRICE BID FOR DUCT BANK SHALL BE PERMITTED REGARDLESS OF THE NUMBER OR TYPE OF SUCH RE-ARRANGEMENT(S) REQUIRED.

KEY NOTES (APPLY TO ALL TYPICAL SECTIONS AS NOTED):

(1) L1TH JOINT SHALL BE PROVIDED AT ALL TRANSVERSE JOINTS. WHEN THE L1TH JOINT CONNECTS TO EXISTING PAVEMENT, IT SHALL BE PAID FOR AS DRILL AND GROUT REINFORCEMENT BAR (EPOXY COATED) BY THE EACH. WHEN THE L1TH JOINT IS LOCATED BETWEEN THE NEW CONCRETE PANELS OR BETWEEN NEW PANELS AND CURB IT SHALL BE CONSIDERED INCIDENTAL.

(2) INPLACE UTILITY LOCATIONS VARY REFER TO PLANS.

(3) CONCRETE ENCASEMENT SHALL CONSIST OF MIX HIGH EARLY CONCRETE COLORED WITH RED DYE. BACKFILL SHALL COMMENCE WHEN CONCRETE STRENGTH IS 75% OF THE CONCRETE STRENGTH. CONCRETE CYLINDER TESTS FOR EACH DAY'S POUR SHALL ESTABLISH TIMING. REFER TO SPECIAL PROVISIONS FOR ADDITIONAL REQUIREMENTS.

(4) NO ADJUSTMENTS (INCREASES) IN PAY QUANTITIES OR PRICES WILL BE MADE FOR TRENCH EXCAVATION LIMITS BEYOND THOSE SHOWN OR AS MAY BE REQUIRED TO FACILITATE THE CONTRACTOR'S OPERATIONS, STABILITY OF SLOPES, PREVENT UNDERMINING OF THE PAVEMENTS TO REMAIN, OR OSHA SAFETY REQUIREMENTS.

(5) SPACERS SHALL SECURELY SUPPORT AND MAINTAIN UNIFORM SPACING OF THE PIPE ASSEMBLY AND CHAIRS SHALL PROVIDE 3 INCHES ABOVE THE BOTTOM OF THE PREPARED BASE DURING THE CONCRETE POUR. SECURE SPACERS TO PIPES AND EARTH TO PREVENT FLOATING DURING CONCRETE POUR. PROVIDE NONFERROUS TIE WIRES TO PREVENT DISPLACEMENT OF THE PIPE DURING THE CONCRETE POUR. TIE WIRES SHALL NOT ACT AS SUBSTITUTE FOR SPACERS. MAINTAIN 7.5-INCH SPACING BETWEEN CONDUITS (CENTER TO CENTER).

(6) MINNESOTA POWER SHALL FURNISH 6" CONDUIT AND FITTINGS FOR INSTALLATION BY CONTRACTOR.

(7) SHALL NOT BE MEASURED SEPARATELY BUT SHALL BE INCLUDED FOR PAYMENT UNDER ITEM 2550.603, "DUCT BANK".

(8) FINAL GRADES SHALL MATCH EXISTING GRADES UNLESS OTHERWISE NOTED IN THE PLANS.

(9) REMOVE (INCIDENTAL).

(10) PAYMENT FOR COMMON EXCAVATION SHALL BE LIMITED TO REMOVAL OF INPLACE MATERIAL BETWEEN BOTTOM OF INPLACE PAVEMENT AND BOTTOM OF PROPOSED SELECT GRANULAR BORROW.

(11) WHERE ADJACENT PAVEMENT IS UNDERMINED BY THE CONTRACTOR'S OPERATIONS SUCH THAT COMPACTION OF BACKFILL TO THE SPECIFIED DENSITY CANNOT BE ACHIEVED, THE CONTRACTOR SHALL PROVIDE LEAN MIX BACKFILL (INCIDENTAL).

(12) SAWCUT CONCRETE PAVEMENT (FULL DEPTH).

(13) THE WATER MAIN CENTERLINE VARIES APPROXIMATELY VARIES 6' TO 8' OFFSET FROM MICHIGAN ST. ROADWAY CENTERLINE. PROPOSED WATER MAIN SHALL BE INSTALLED IN THE EXISTING WATER MAIN TRENCH. THE EXISTING AND PROPOSED WATER ALIGNMENTS ARE A GRAPHICAL DEPICTION AND NOT TO BE USED FOR STAKING OR LAYOUT. ALL TEMPORARY SHORING REQUIRED TO CONSTRUCT THE WATER MAIN TRENCH AND SECURE ADJACENT UTILITIES SHALL BE CONSIDERED INCIDENTAL REGARDLESS OF THE FIELD LOCATION OF THE WATER MAIN WITHIN THE APPROXIMATE 6' TO 8' CENTERLINE OFFSET.

(14) FULLY SUPPORT AND PROTECT EXISTING UTILITIES TO REMAIN. REFER TO UTILITY NOTES ON SHEET 4 AND SPECIAL PROVISIONS.

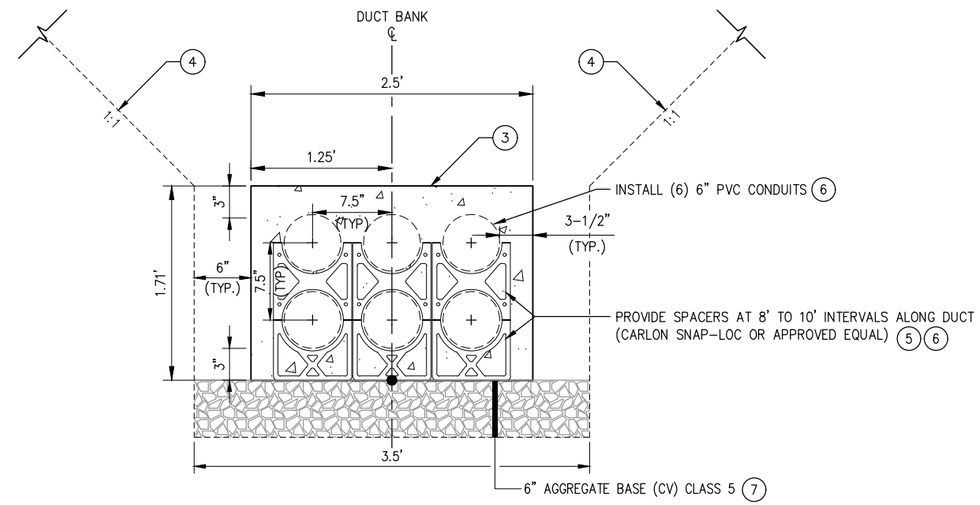

TYPICAL DUCT BANK SECTION

APPLIES: STA. 22+09 TO STA. 29+27

(CONDUIT SPACING & MATERIALS SHALL MEET MINIMUM N.E.C. REQUIREMENTS.)

NTS

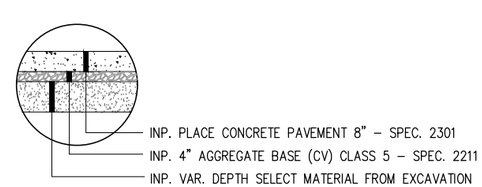

INSET A

INPLACE CONCRETE PAVING, NTS

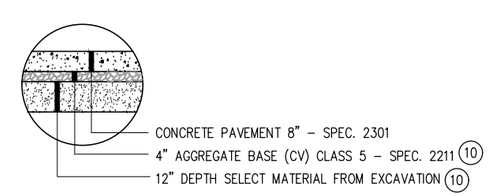

INSET B 2

PROPOSED CONCRETE PAVING, NTS

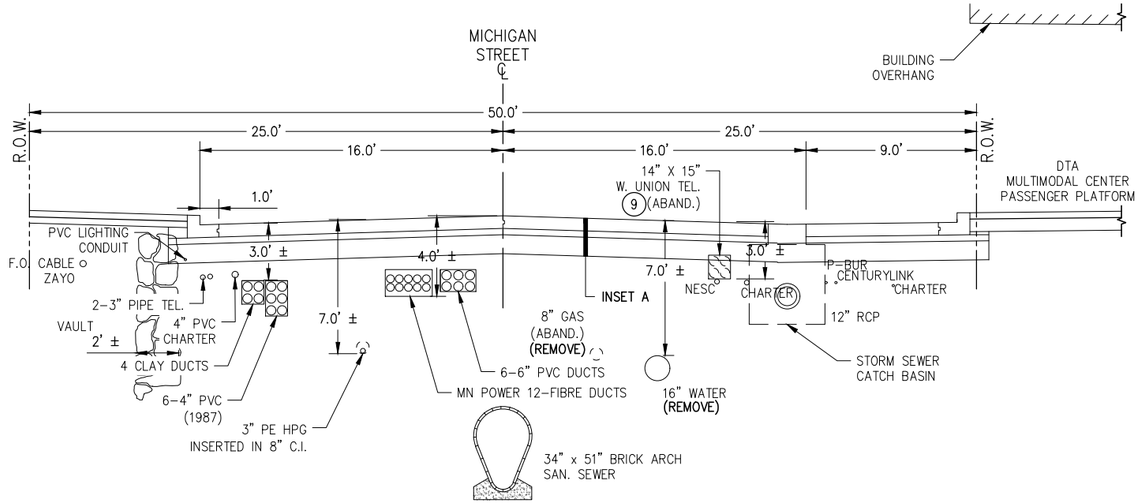

MICHIGAN STREET EXISTING TYPICAL SECTION (2)(14)

3RD AVE. WEST TO 2ND AVE WEST. WEST-BLOCK
(STA. 21+66 TO 22+57)

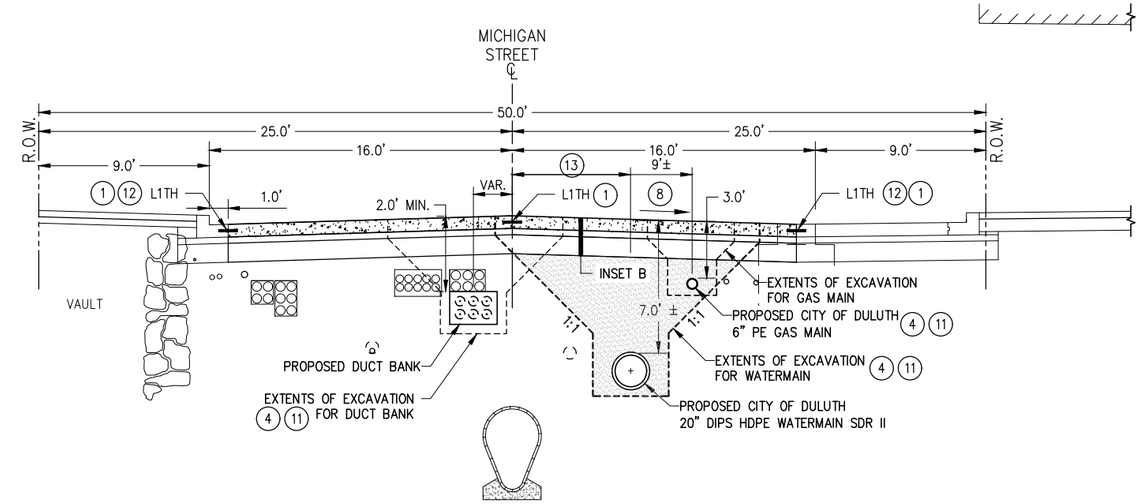

MICHIGAN STREET PROPOSED TYPICAL SECTION

(STA. 21+66 TO 22+57)

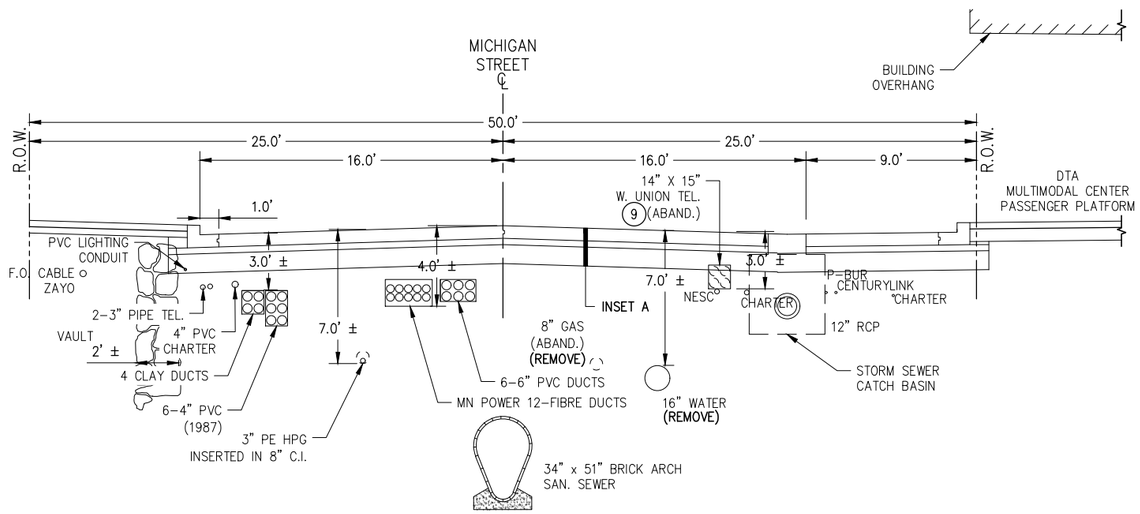

MICHIGAN STREET EXISTING TYPICAL SECTION (2)(14)

3RD AVE. WEST TO 2ND AVE WEST. EAST-BLOCK
(STA. 22+57 TO 23+85)

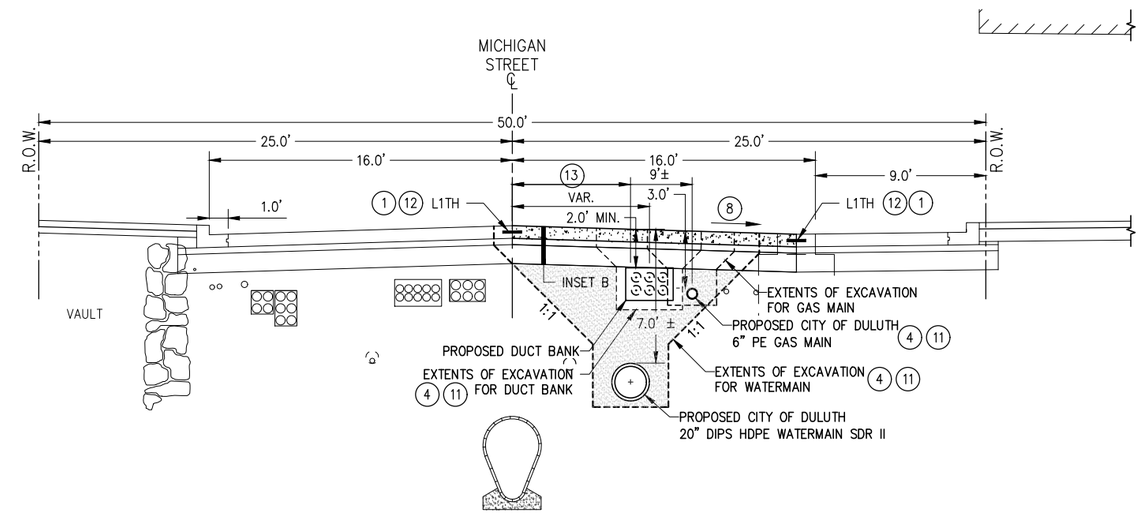

MICHIGAN STREET PROPOSED TYPICAL SECTION

(STA. 22+57 TO 23+85)

PLOT DATE: 2/24/2017 9:01:46 AM FILE: R:\16Proj\160811\600 Drawings\C\160811_05_Typical Section.dwg

I HEREBY CERTIFY that this plan, specification or report was prepared by me or under my direct supervision and that I am a duly Licensed Professional Engineer under the laws of the State of Minnesota.	BRAD SCOTT PRINTED NAME	SIGNATURE	02-23-17 DATE 46198 LIC. NO.	MICHIGAN ST. 3RD-1ST AVE WEST LHB PROJECT NO. 160811	CITY PROJECT NO. 1601	TYPICAL SECTIONS SHEET NO. 6 OF 49 SHEETS

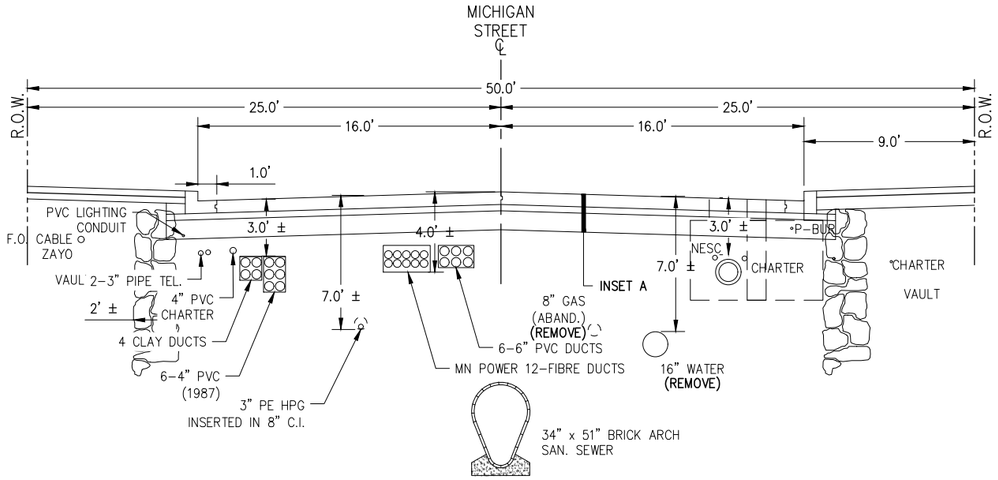

MICHIGAN STREET EXISTING TYPICAL SECTION (2)(14)

3RD AVE. WEST TO 2ND AVE WEST. EAST-BLOCK
(STA. 23+85 TO 25+91)

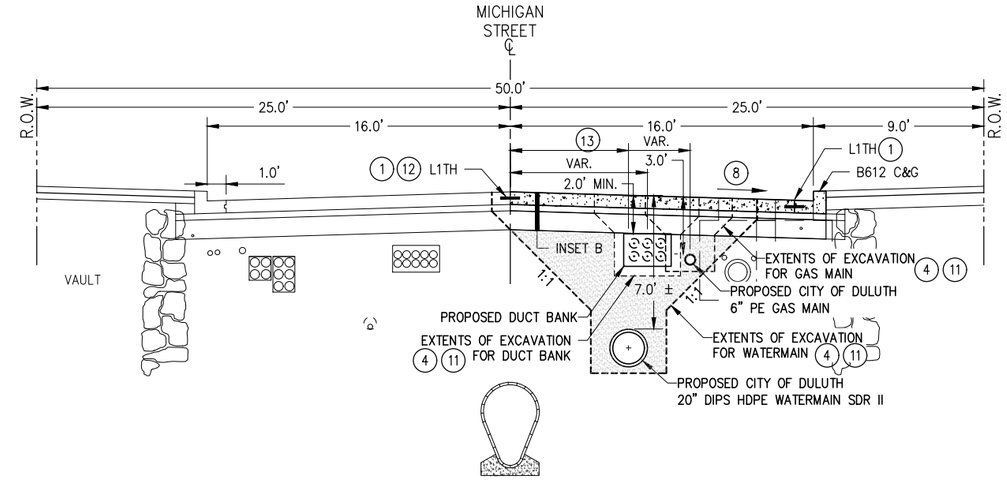

MICHIGAN STREET PROPOSED TYPICAL SECTION

(STA. 23+85 TO 25+91)

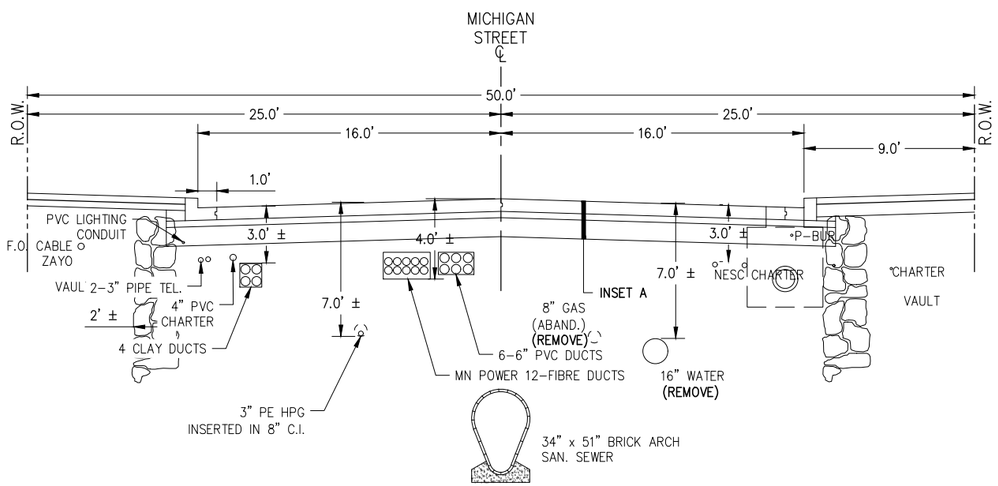

MICHIGAN STREET EXISTING TYPICAL SECTION (2)(14)

2ND AVE. WEST TO 1ST AVE WEST. WEST-BLOCK
(STA. 25+91 TO 27+30)

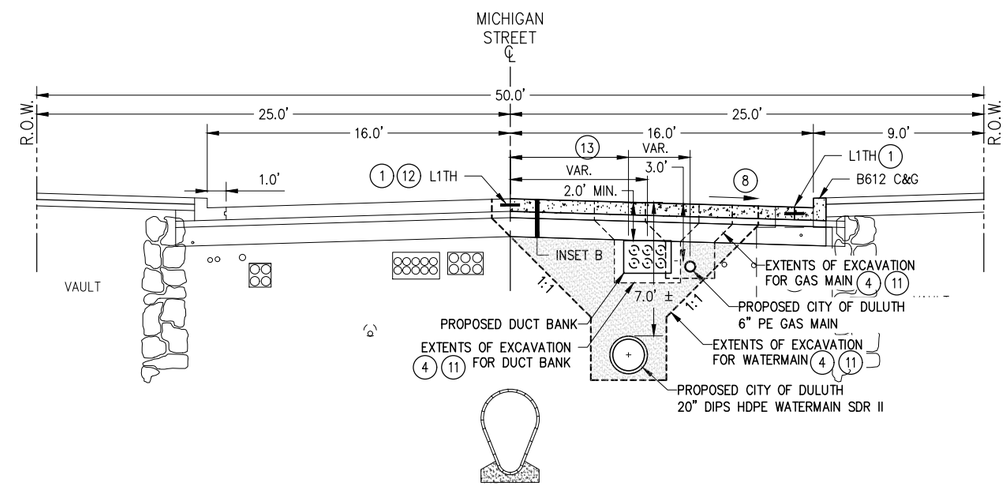

MICHIGAN STREET PROPOSED TYPICAL SECTION

(STA. 25+91 TO 27+30)

PLOT DATE: 2/24/2017 9:01:51 AM FILE: R:\16Proj\160811\600 Drawings\C\160811_05_Typical Section.dwg

I HEREBY CERTIFY that this plan, specification or report was prepared by me or under my direct supervision and that I am a duly Licensed Professional Engineer under the laws of the State of Minnesota.	BRAD SCOTT PRINTED NAME	SIGNATURE	02-23-17 DATE 46198 LIC. NO.	MICHIGAN ST. 3RD-1ST AVE WEST LHB PROJECT NO. 160811	CITY PROJECT NO. 1601	TYPICAL SECTIONS SHEET NO. 7 OF 49 SHEETS

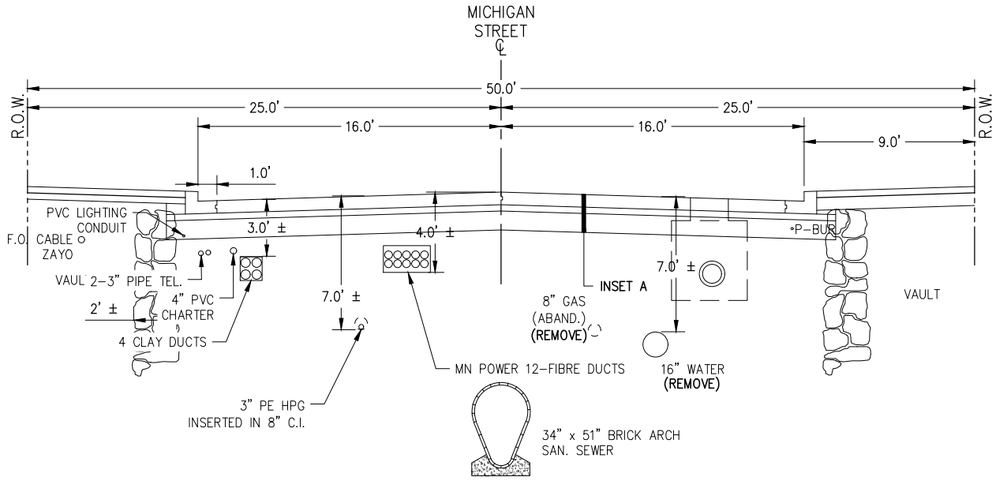

MICHIGAN STREET EXISTING TYPICAL SECTION (2)(14)

2ND AVE. WEST TO 1ST AVE WEST. MID-BLOCK
(STA. 27+30 TO 29+37)

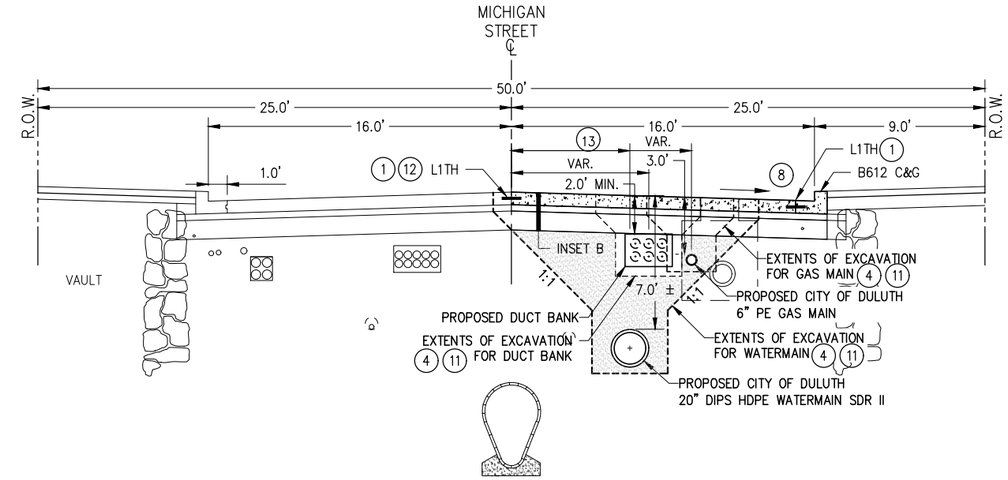

MICHIGAN STREET PROPOSED TYPICAL SECTION

(STA. 27+30 TO 29+37)

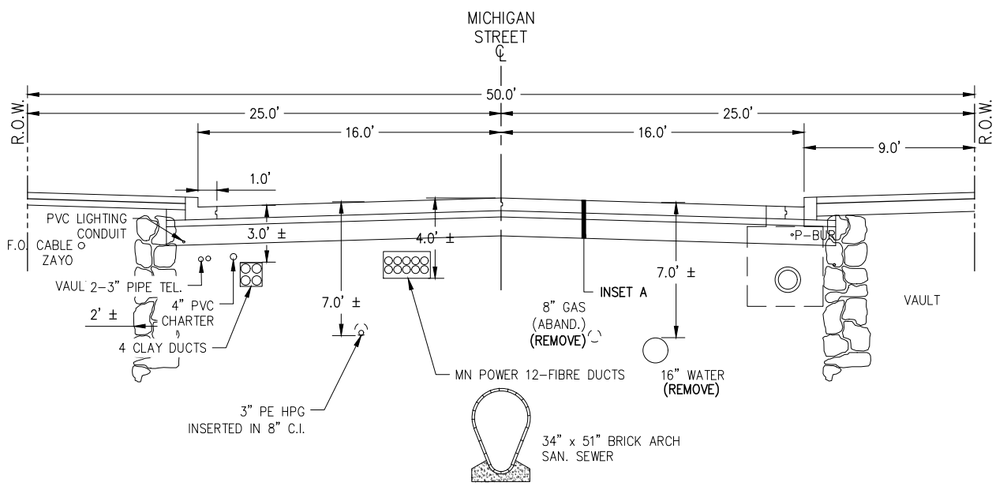

MICHIGAN STREET EXISTING TYPICAL SECTION (2)(14)

2ND AVE. WEST TO 1ST AVE WEST. EAST-BLOCK
(STA. 29+37 TO 31+26)

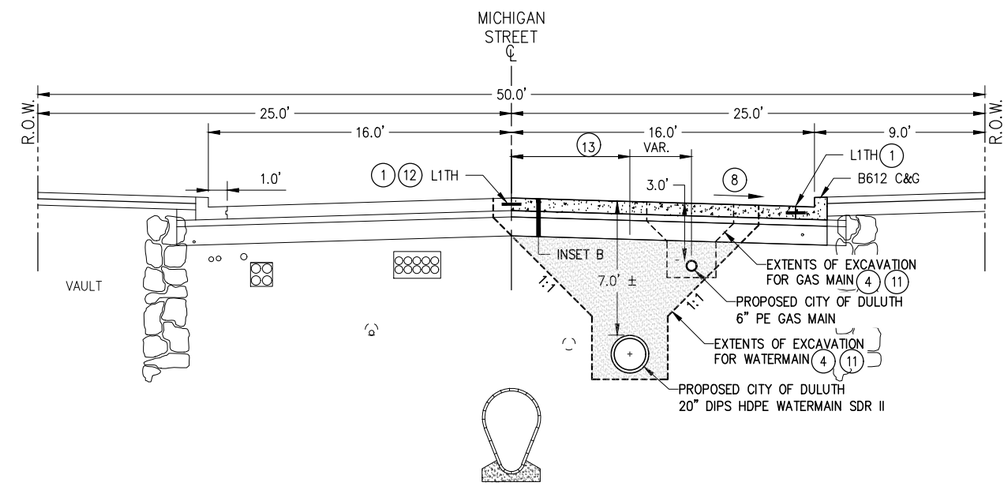

MICHIGAN STREET PROPOSED TYPICAL SECTION

(STA. 29+37 TO 31+26)

PLOT DATE: 2/24/2017 9:01:56 AM FILE: R:\16Proj\160811\600 Drawings\C\160811_05_Typical Section.dwg

I HEREBY CERTIFY that this plan, specification or report was prepared by me or under my direct supervision and that I am a duly Licensed Professional Engineer under the laws of the State of Minnesota.	BRAD SCOTT PRINTED NAME	SIGNATURE	02-23-17 DATE 46198 LIC. NO.	MICHIGAN ST. 3RD-1ST AVE WEST LHB PROJECT NO. 160811	CITY PROJECT NO. 1601	TYPICAL SECTIONS SHEET NO. 8 OF 49 SHEETS

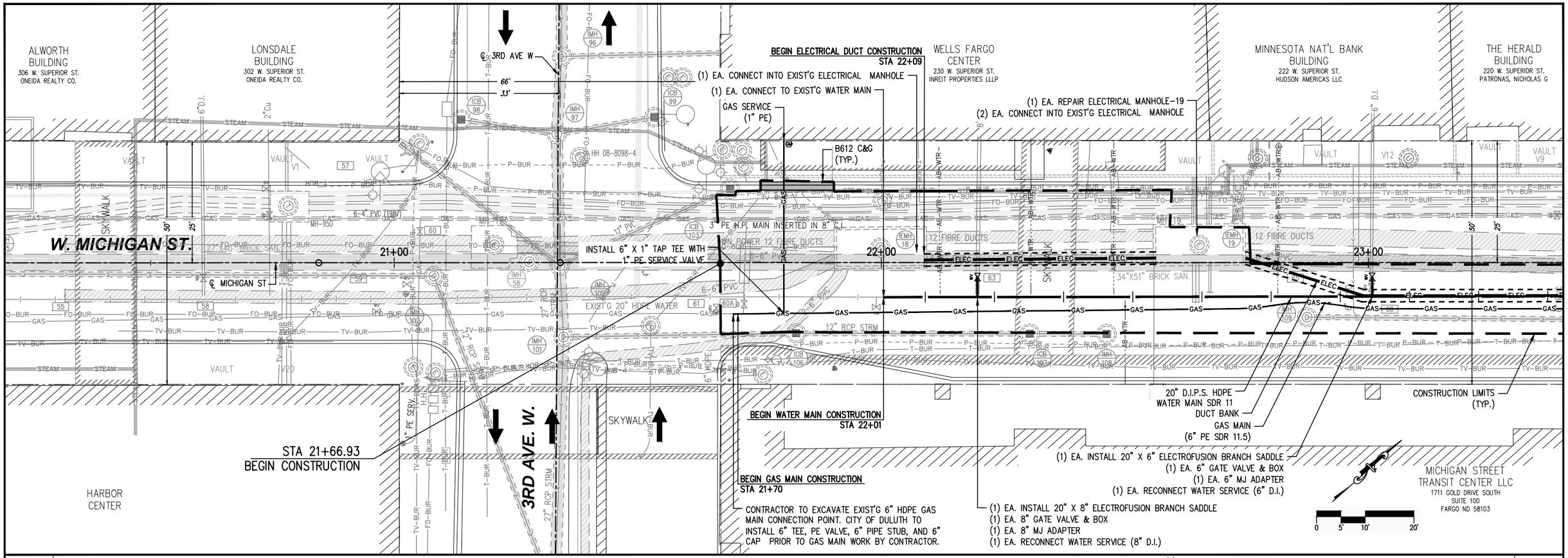

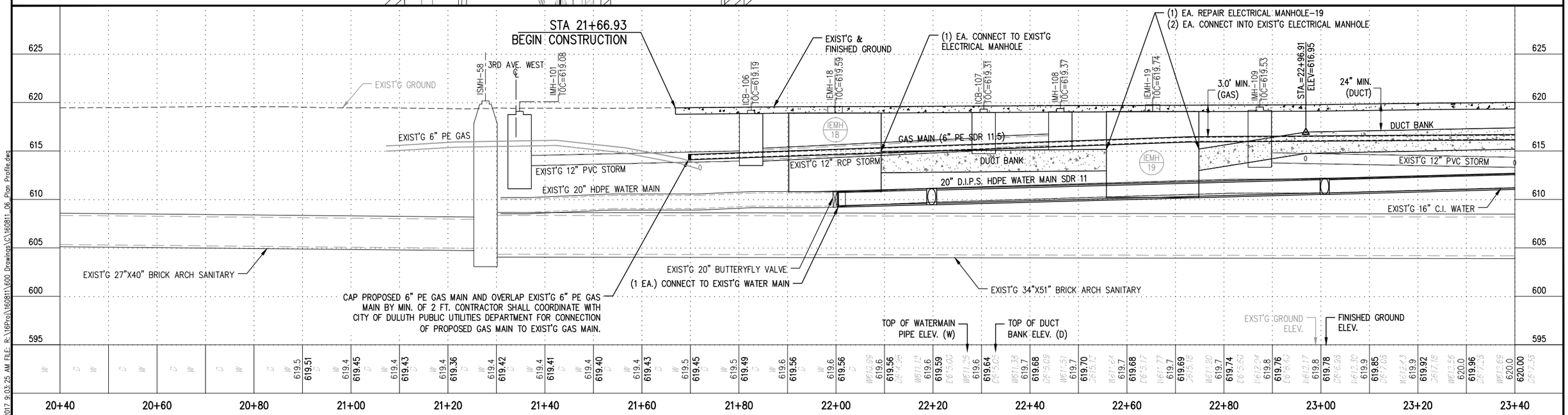

I HEREBY CERTIFY that this plan, specification or report was prepared by me or under my direct supervision and that I am a duly Licensed Professional Engineer under the laws of the State of Minnesota.

BRAD SCOTT
PRINTED NAME

SIGNATURE

02-23-17
DATE

46198
LIC. NO.

MICHIGAN ST. 3RD-1ST AVE WEST

LHB PROJECT NO. 160811

CITY PROJECT NO. 1601

PLAN & PROFILE

SHEET NO. 9 OF 49 SHEETS

PLOT DATE: 2/24/2017 9:03:25 AM FILE: R:\16Proj\160811\600 Drawings\C\160811_06_Plan Profile.dwg

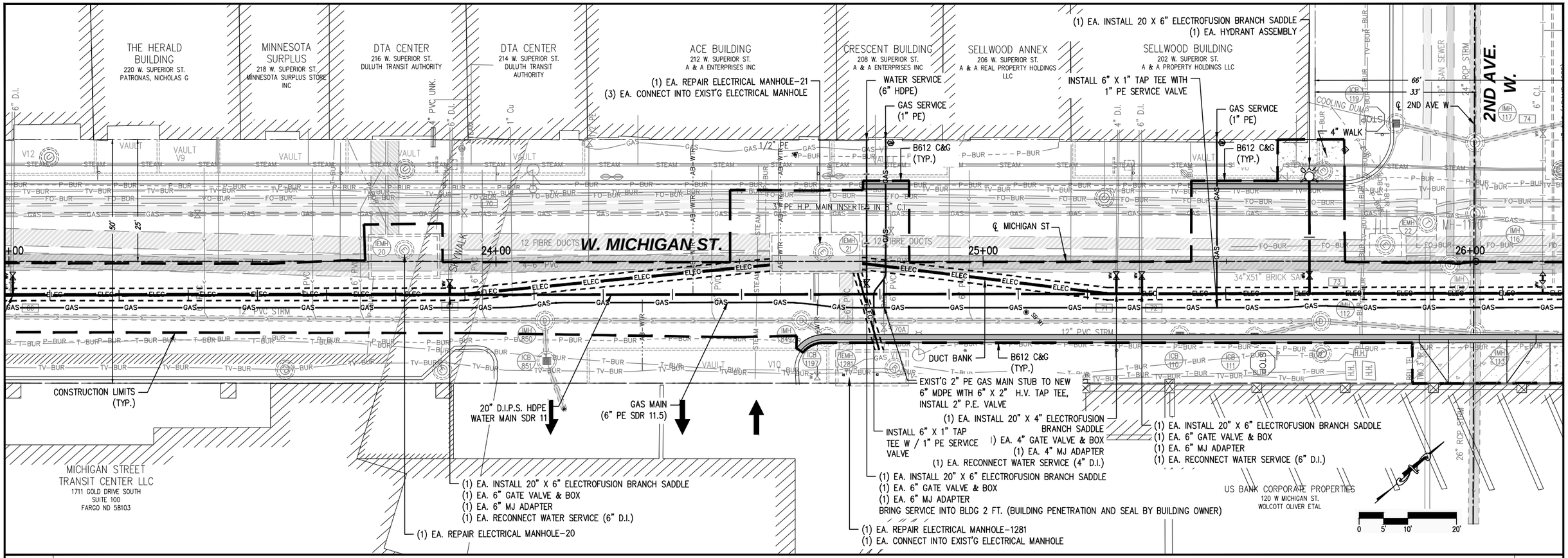

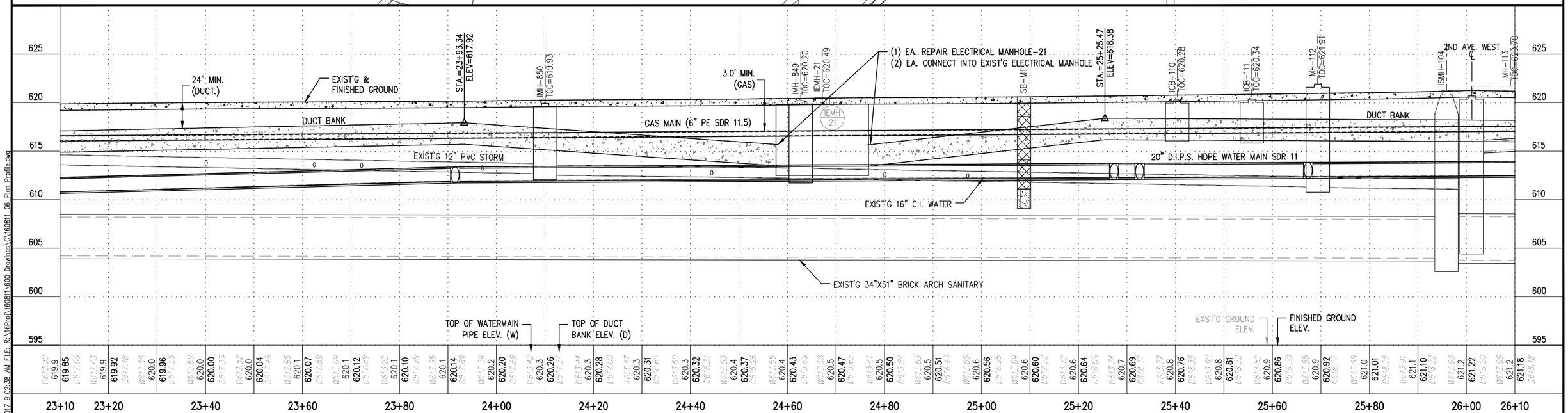

PLOT DATE: 2/24/2017 9:02:38 AM FILE: R:\16Proj\160811\600 Drawings\C\160811_06_Plan Profile.dwg

I HEREBY CERTIFY that this plan, specification or report was prepared by me or under my direct supervision and that I am a duly Licensed Professional Engineer under the laws of the State of Minnesota.

BRAD SCOTT	Brad Scott	02-23-17	MICHIGAN ST. 3RD-1ST AVE WEST	CITY PROJECT NO. 1601	PLAN & PROFILE
PRINTED NAME	SIGNATURE	DATE	LHB PROJECT NO. 160811		SHEET NO. 10 OF 49 SHEETS
		46198 LIC. NO.			

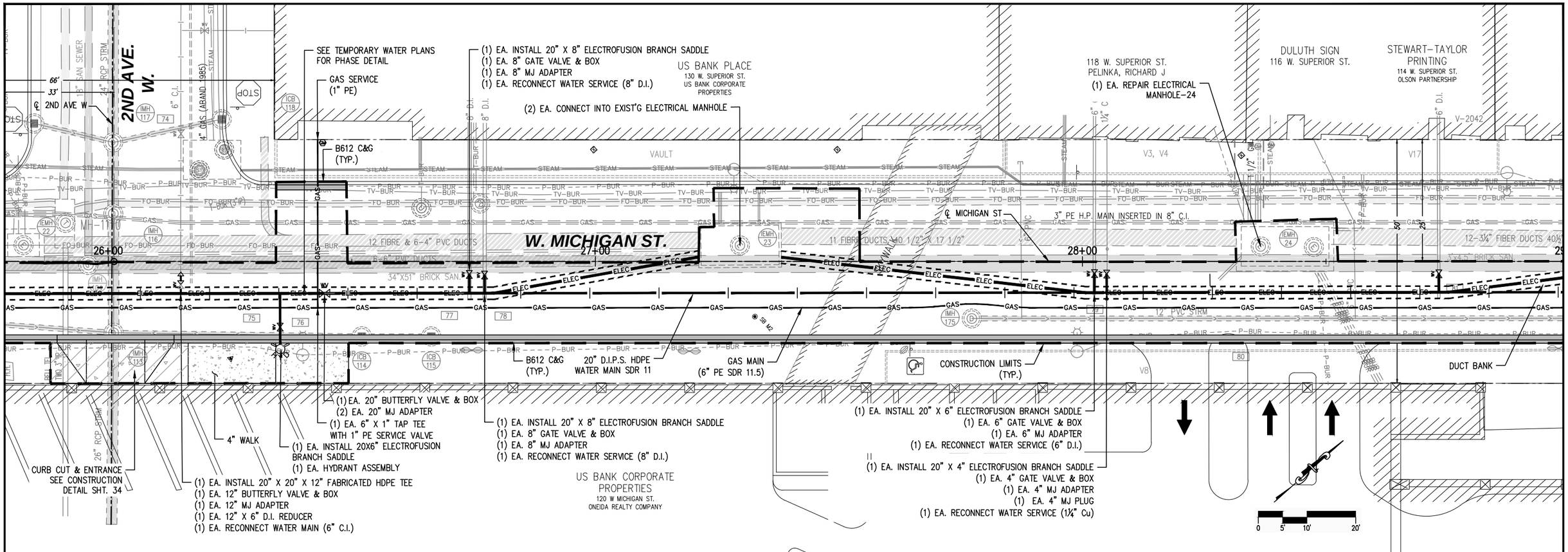

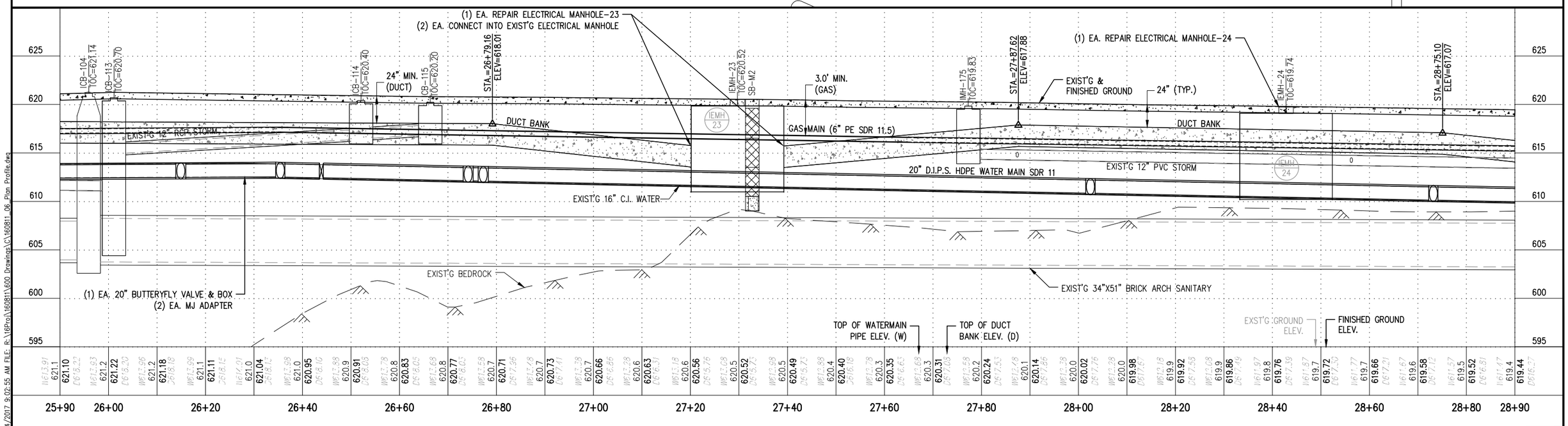

I HEREBY CERTIFY that this plan, specification or report was prepared by me or under my direct supervision and that I am a duly Licensed Professional Engineer under the laws of the State of Minnesota.

BRAD SCOTT
PRINTED NAME

SIGNATURE

02-23-17
DATE

46198
LIC. NO.

MICHIGAN ST. 3RD-1ST AVE WEST

LHB PROJECT NO. 160811

CITY PROJECT NO. 1601

PLAN & PROFILE

SHEET NO. 11 OF 49 SHEETS

PLOT DATE: 2/24/2017 9:02:55 AM FILE: R:\16Pro\160811\600 Drawings\C\160811_06_Plan Profile.dwg

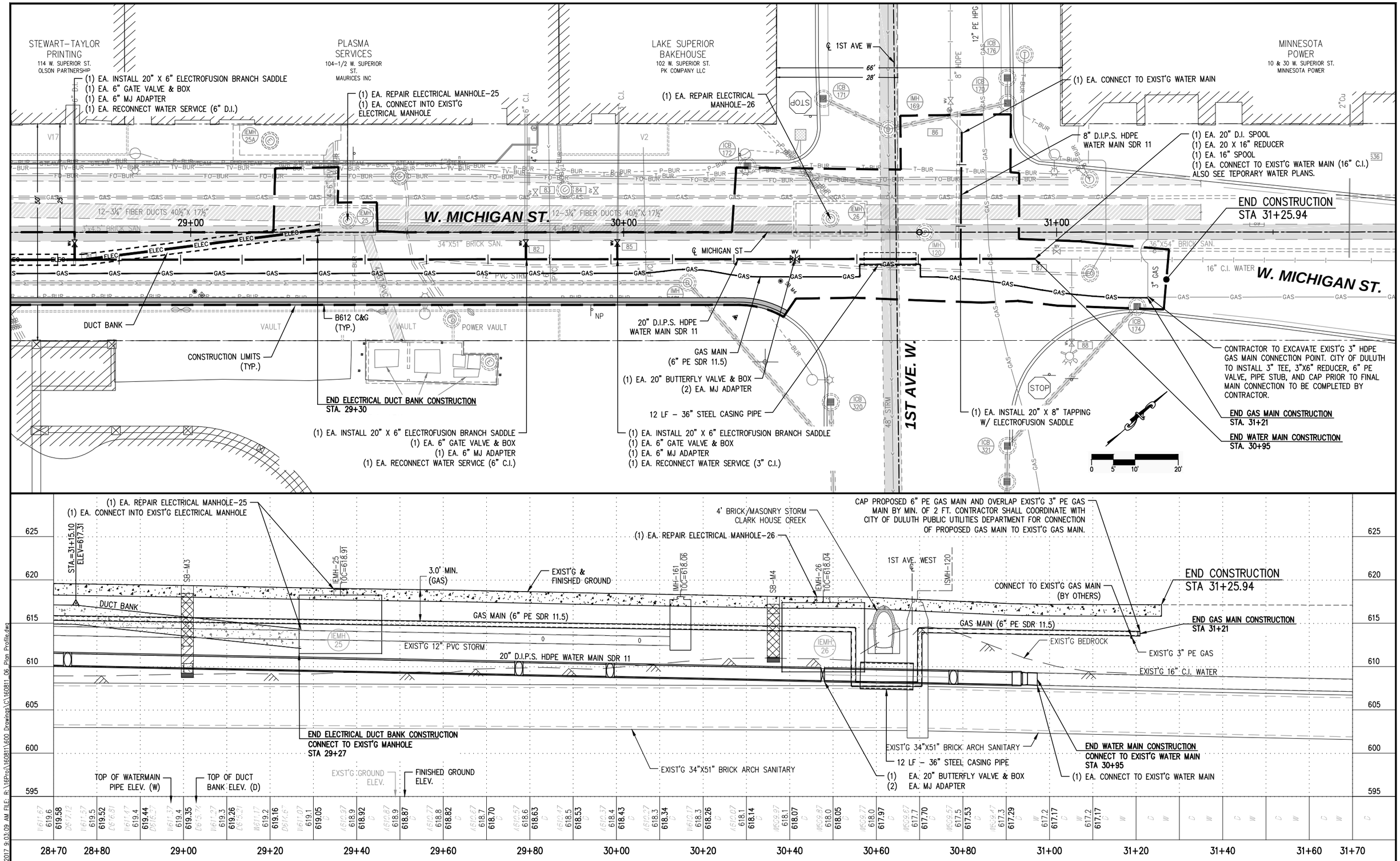

I HEREBY CERTIFY that this plan, specification or report was prepared by me or under my direct supervision and that I am a duly Licensed Professional Engineer under the laws of the State of Minnesota.

BRAD SCOTT
PRINTED NAME

SIGNATURE

02-23-17
DATE

46198
LIC. NO.

MICHIGAN ST. 3RD-1ST AVE WEST

LHB PROJECT NO. 160811

CITY PROJECT NO. 1601

PLAN & PROFILE

SHEET NO. 12 OF 49 SHEETS

PLOT DATE: 2/24/2017 9:03:09 AM FILE: R:\16Pro\160811\600 Drawings\C\160811_06_Plan Profile.dwg

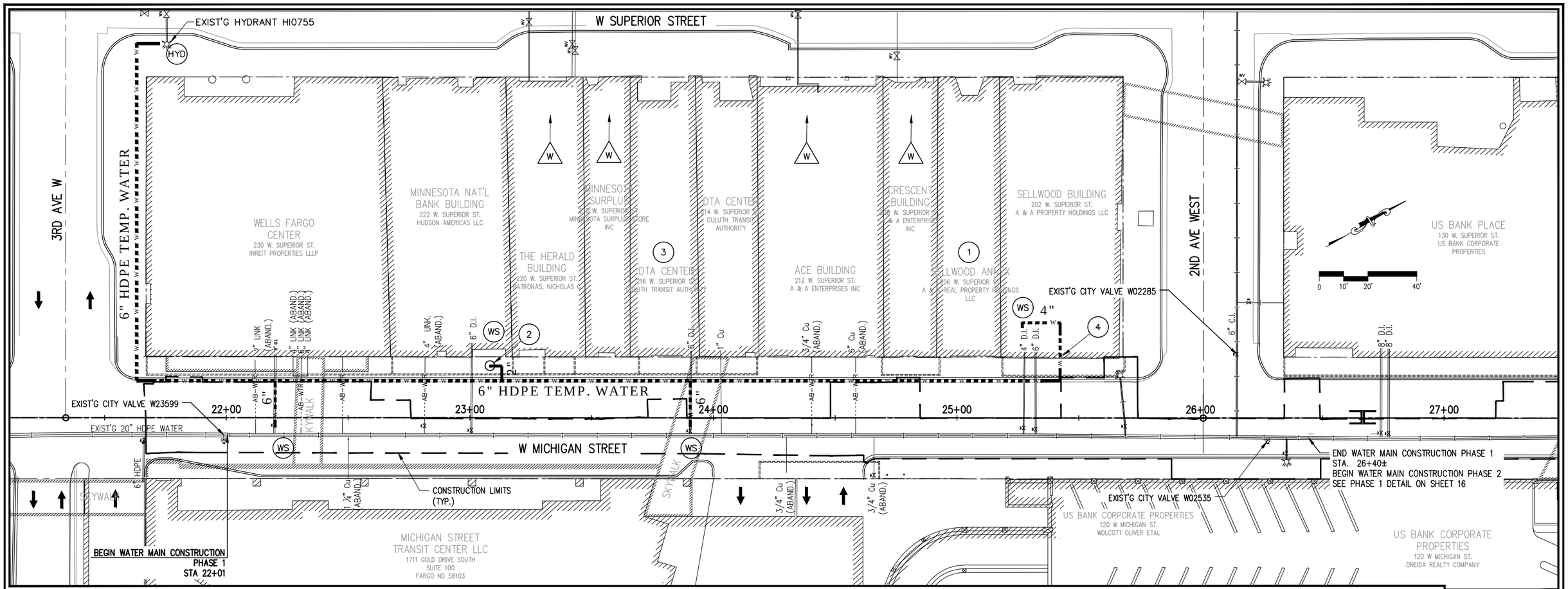

PHASE 1 TEMPORARY WATER SERVICE SYSTEM (5)

TEMPORARY WATER SERVICE SYSTEM STAGING REQUIREMENTS:

1. THE CONTRACTOR SHALL WORK WITH THE CITY TO ENSURE CONTINUED SERVICE TO ALL BUILDINGS AFFECTED BY THE WORK.
2. STAGES SHALL BE COMPLETED SEQUENTIALLY. NEW WATER MAINS SHALL BE TESTED AND PLACED IN SERVICE PRIOR TO SUBSEQUENT STAGES BEING STARTED.
3. REFER TO SPECIAL PROVISIONS FOR ADDITIONAL REQUIREMENTS.

TEMPORARY WATER SERVICE SYSTEM NOTES

1. THE CONTRACTOR SHALL PROVIDE A WRITTEN PLAN INCLUDING A SCHEDULE, PRODUCT INFORMATION AND EQUIPMENT LIST TO THE ENGINEER FOR APPROVAL AT LEAST 14 DAYS PRIOR TO INSTALLATION OF TEMPORARY WATER SERVICE.
2. THE CONTRACTOR SHALL ATTEND A PRE-INSTALLATION MEETING WITH THE CITY OF DULUTH PRIOR TO THE INSTALLATION OF THE TEMPORARY WATER SYSTEM.
3. TEMPORARY WATER SERVICE SHALL BE FULLY ESTABLISHED FOR EACH WATER MAIN CONSTRUCTION STAGE PRIOR TO THE CONSTRUCTION OF THE NEW WATER MAINS.
4. THE CONTRACTOR SHALL BE RESPONSIBLE FOR INSTALLING THE TEMPORARY WATER SERVICE SYSTEM AS SHOWN ON THE PLAN. THE CONTRACTOR SHALL TAKE ADEQUATE STEPS TO PROTECT TEMPORARY WATER SERVICE LINES DURING CONSTRUCTION.
5. THE TEMPORARY WATER SYSTEM MUST MEET THE PRESSURE AND BACTERIA TEST REQUIREMENTS AS SPECIFIED IN THE CITY OF DULUTH STANDARD CONSTRUCTION SPECIFICATIONS SECTION 2504.
6. PRIOR TO MOVING ANY SEGMENT OF TEMPORARY WATER SERVICE PIPE THE ENDS SHALL BE CAPPED WITH WATER TIGHT CAPS (DUCT TAPE IS NOT ACCEPTABLE). IF THE PIPE BECOMES CONTAMINATED WITH DIRT OR DEBRIS WHILE BEING MOVED IT SHALL BE RE-DISINFECTED AND RETESTED FOR BACTERIA BEFORE BEING PUT INTO SERVICE.
7. THE CONTRACTOR SHALL PROVIDE TWO (2) EMERGENCY BACKUP CONTACT PERSONNEL FOR THE TEMPORARY WATER SYSTEM. THE EMERGENCY CONTACTS SHALL BE AVAILABLE 24 HOURS A DAY 7 DAYS A WEEK. IF CITY OF DULUTH STAFF ARE CALLED TO THE PROJECT SITE TO REPAIR THE TEMPORARY WATER SERVICE SYSTEM THE CONTRACTOR WILL BE BACK CHARGED THE COST OF THE REPAIR.
8. TEMPORARY MAIN SHALL BE LOCATED ALONG CURB LINE TO AVOID CONFLICT WITH PEDESTRIAN AND VEHICLE CONFLICTS. WHERE TEMPORARY MAINS CROSS ACTIVE VEHICLE AND PEDESTRIAN PATHS, THE CONTRACTOR SHALL PROVIDE VEHICLE RATED AND/OR ADA ACCESSIBLE RAMPS TO FACILITATE CROSSING.

KEY NOTES:

(1) SELLWOOD ANNEX WATER SERVICE IS PROVIDED BY SELLWOOD BUILDING THROUGH INTERNAL BUILDING PLUMBING.
(2) ROUTE TEMPORARY SERVICE THROUGH INPLACE VAULT MH. PROVIDE TEMPORARY LID AND PEDESTRIAN RAMP CROSSING.
(3) DTA CENTER (214) W SUPERIOR) WATER SERVICE IS PROVIDED BY ADJACENT DTA CENTER BUILDING (216 W. SUPERIOR) THROUGH INTERNAL BUILDING PLUMBING.
(4) ROUTE TEMPORARY SERVICE THROUGH BUILDING VENT. PROVIDE PEDESTRIAN RAMP CROSSING.
(5) SEE SHEET 15 FOR WATER SERVICE SUMMARY.

LEGEND

(WS) PROVIDE TEMPORARY WATER SERVICE CONNECTION (SEE TEMPORARY WATER CONSTRUCTION DETAILS)

(HYD) CONNECT TEMPORARY MAIN TO EXISTING HYDRANT (CONNECT TO BOTH HOSE NOZZLES OR PUMP NOZZLE TO PROVIDE ADEQUATE FLOWS)

(W) BUILDING WATER SERVICE SUPPLIED FROM SUPERIOR STREET

I HEREBY CERTIFY that this plan, specification or report was prepared by me or under my direct supervision and that I am a duly Licensed Professional Engineer under the laws of the State of Minnesota.

BRAD SCOTT
PRINTED NAME

SIGNATURE

02-23-17
DATE

46198
LIC. NO.

MICHIGAN ST. 3RD-1ST AVE WEST

LHB PROJECT NO. 160811

CITY PROJECT NO. 1601

GENERAL LAYOUT

TEMPORARY WATER SERVICE SYSTEM

SHEET NO. 13 OF 49 SHEETS

PLOT DATE: 2/24/2017 9:03:45 AM FILE: R:\16Proj\160811\600 Drawings\C\160811_07.1_Temporary Water General Layout.dwg

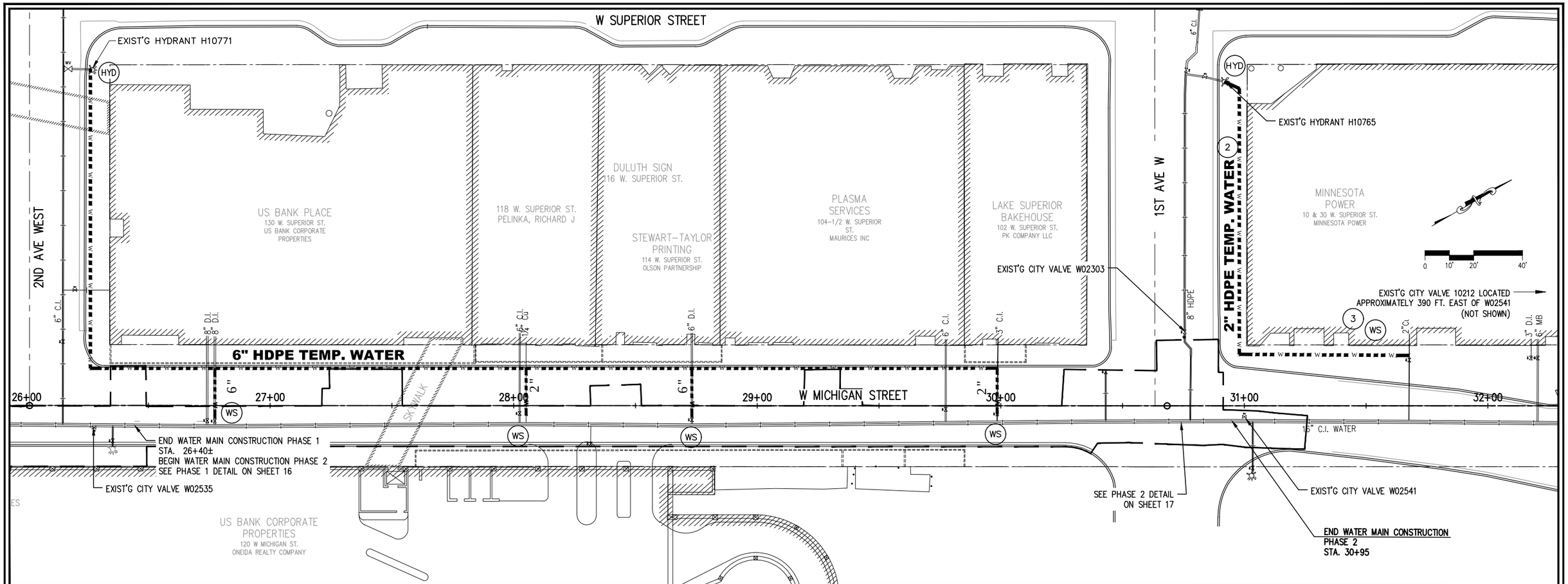

PHASE 2 TEMPORARY WATER SERVICE SYSTEM (1)

TEMPORARY WATER SERVICE SYSTEM STAGING REQUIREMENTS:

1. THE CONTRACTOR SHALL WORK WITH THE CITY TO ENSURE CONTINUED SERVICE TO ALL BUILDINGS AFFECTED BY THE WORK.
2. STAGES SHALL BE COMPLETED SEQUENTIALLY. NEW WATER MAINS SHALL BE TESTED AND PLACED IN SERVICE PRIOR TO SUBSEQUENT STAGES BEING STARTED.
3. REFER TO SPECIAL PROVISIONS FOR ADDITIONAL REQUIREMENTS.

TEMPORARY WATER SERVICE SYSTEM NOTES

1. THE CONTRACTOR SHALL PROVIDE A WRITTEN PLAN INCLUDING A SCHEDULE, PRODUCT INFORMATION AND EQUIPMENT LIST TO THE ENGINEER FOR APPROVAL AT LEAST 14 DAYS PRIOR TO INSTALLATION OF TEMPORARY WATER SERVICE.
2. THE CONTRACTOR SHALL ATTEND A PRE-INSTALLATION MEETING WITH THE CITY OF DULUTH PRIOR TO THE INSTALLATION OF THE TEMPORARY WATER SYSTEM.
3. TEMPORARY WATER SERVICE SHALL BE FULLY ESTABLISHED FOR EACH WATER MAIN CONSTRUCTION STAGE PRIOR TO THE CONSTRUCTION OF THE NEW WATER MAINS.
4. THE CONTRACTOR SHALL BE RESPONSIBLE FOR INSTALLING THE TEMPORARY WATER SERVICE SYSTEM AS SHOWN ON THE PLAN. THE CONTRACTOR SHALL TAKE ADEQUATE STEPS TO PROTECT TEMPORARY WATER SERVICE LINES DURING CONSTRUCTION.
5. THE TEMPORARY WATER SYSTEM MUST MEET THE PRESSURE AND BACTERIA TEST REQUIREMENTS AS SPECIFIED IN THE CITY OF DULUTH STANDARD CONSTRUCTION SPECIFICATIONS SECTION 2504.
6. PRIOR TO MOVING ANY SEGMENT OF TEMPORARY WATER SERVICE PIPE THE ENDS SHALL BE CAPPED WITH WATER TIGHT CAPS (DUCT TAPE IS NOT ACCEPTABLE). IF THE PIPE BECOMES CONTAMINATED WITH DIRT OR DEBRIS WHILE BEING MOVED IT SHALL BE RE-DISINFECTED AND RETESTED FOR BACTERIA BEFORE BEING PUT INTO SERVICE.
7. THE CONTRACTOR SHALL PROVIDE TWO (2) EMERGENCY BACKUP CONTACT PERSONNEL FOR THE TEMPORARY WATER SYSTEM. THE EMERGENCY CONTACTS SHALL BE AVAILABLE 24 HOURS A DAY 7 DAYS A WEEK. IF CITY OF DULUTH STAFF ARE CALLED TO THE PROJECT SITE TO REPAIR THE TEMPORARY WATER SERVICE SYSTEM THE CONTRACTOR WILL BE BACK CHARGED THE COST OF THE REPAIR.
8. TEMPORARY MAIN SHALL BE LOCATED ALONG CURB LINE TO AVOID CONFLICT WITH PEDESTRIAN AND VEHICLE CONFLICTS. WHERE TEMPORARY MAINS CROSS ACTIVE VEHICLE AND PEDESTRIAN PATHS, THE CONTRACTOR SHALL PROVIDE VEHICLE RATED AND/OR ADA ACCESSIBLE RAMPS TO FACILITATE CROSSING.

KEY NOTES:

(1) SEE SHEET 15 FOR WATER SERVICE SUMMARY.

(2) TEMPORARY WATER SERVICE TO THE MINNESOTA POWER BUILDING SHALL BE SHORT TERM. SEE SPECIAL PROVISIONS.

(3) CONTRACTOR SHALL PLAN THAT THE TEMPORARY CONNECTION WILL BE INSIDE THE BUILDING. COORDINATE WITH OWNER.

LEGEND

(WS) PROVIDE TEMPORARY WATER SERVICE CONNECTION (SEE TEMPORARY WATER CONSTRUCTION DETAILS)

(HYD) CONNECT TEMPORARY MAIN TO EXISTING HYDRANT (CONNECT TO BOTH HOSE NOZZLES OR PUMP NOZZLE TO PROVIDE ADEQUATE FLOWS)

PLOT DATE: 2/24/2017 9:03:51 AM FILE: R:\16Proj\160811\600 Drawings\C\160811_07.1_Temporary Water General Layout.dwg

I HEREBY CERTIFY that this plan, specification or report was prepared by me or under my direct supervision and that I am a duly Licensed Professional Engineer under the laws of the State of Minnesota.

BRAD SCOTT
PRINTED NAME

SIGNATURE

02-23-17
DATE

46198
LIC. NO.

MICHIGAN ST. 3RD-1ST AVE WEST

LHB PROJECT NO. 160811

CITY PROJECT NO. 1601

GENERAL LAYOUT

TEMPORARY WATER SERVICE SYSTEM

SHEET NO. 14 OF 49 SHEETS

WATER SERVICES

LOCATION				TEMP SERVICE		PERMANENT SERVICE									
													SERVICE TYPE		
LINE	ADDRESS		NAME	SERVICE DIAM (INCHES)	CONNEX POINT	RECON SERVICE DIAM (INCHES	TAP SIZE (INCHES)	VALVE (INCHES)	REDUCER	MJ	SIZE (INCHES)	MATERIAL	DOMESTIC	FIRE	REMARKS
PHASE 1															
1	230	W Superior Street	WELLS FARGO	6	TRENCH	8	20 X 8	8		X	8	DI	X	X	
2	222	W Superior Street	MN NAT'L BANK	2	VAULT MH TO BLDG SVC	6	20 X 6	6		X	6	DI	X	X	COORDINATE W/OWNER FOR MH TO BLDG CONNECTION CONNECT IN BUILDING TO SERVICE
3	220	W Superior Street	HERALD BUILDING	N/A		N/A									BLDG SERVICE FROM SUPERIOR ST
4	218	W Superior Street	MN SURPLUS	N/A		N/A									BLDG SERVICE FROM SUPERIOR ST
5	216	W Superior Street	DTA CENTER	6	TRENCH	6	20 X 6	6		X	6	DI	X	X	
6	214	W Superior Street	DTA CENTER	N/A											INTERNAL BLDG SERVICE FROM 216 W SUPERIOR
7	212	W Superior Street	ACE BUILDING	N/A		N/A									BLDG SERVICE FROM SUPERIOR ST
8	208	W Superior Street	CRESCENT	N/A		6	20 X 6	6	N/A	N/A	6	N/A			BLDG SERVICE FROM SUPERIOR ST | CAP NEW SVC
9	206	W Superior Street	SELLWOOD ANNEX	N/A		N/A									BLDG SERVICE FROM SELLWOOD BUILDING
10	202	W Superior Street	SELLWOOD BUILDING	N/A		6	20 X 6	6		X	6	DI		X	
11	202	W Superior Street	SELLWOOD BUILDING	2	BLDG VENT TO BLDG SVC	4	20 X 4	4	X	X	4	DI	X		COORDINATE W/OWNER FOR VENT TO BLDG CONNECT IN BUILDING TO SERVICE
PHASE 2															
12	130	W Superior Street	US BANK PLACE	N/A		8	20 X 8	8		X	8	DI		X	
13	130	W Superior Street	US BANK PLACE	6	TRENCH	8	20 X 8	8		X	8	DI	X		
14	118	W Superior Street	OLD SAWMILL	N/A		6	20 X 6	6		X	6	CI		X	SERVICE SIZE/NEED TO BE VERIFIED BY CITY PRIOR TO WORK
15	118	W Superior Street	OLD SAWMILL	2	TRENCH	4	20 X 4	4	X	X	1 1/4"	CU	X		SERVICE SIZE/NEED TO BE VERIFIED BY CITY PRIOR TO WORK
16	114	W Superior Street	STEWART TAYLOR	6	TRENCH	6	20 X 6	6		X	6	DI	X	X	STEWART-TAYLOR PRINTING
17	104 1/2	W Superior Street	PLASMA SERVICES	N/A		6	20 X 6	6		X	6	DI	X	X	OWNER TO PROVIDE OWN TEMP JUMPER IN BUILDING COORDINATE SERVICE WORK AND NOTIFY PRIOR
18	102	W Superior Street	LAKE SUPERIOR BAKEHOUSE	2	TRENCH	6	20 X 6	6	X	X	3	CI	X		
19	10	W Superior Street	MINNESOTA POWER	2	BLDG	N/A							X		COORDINATE WITH MINNESOTA POWER FOR TEMPORARY SERVICE CONNECTION IN BUILDING

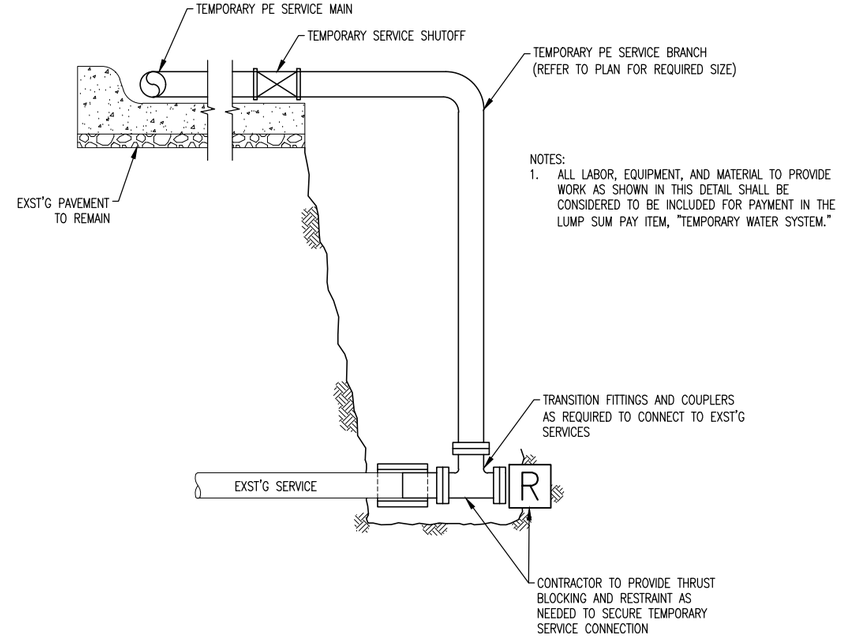

NOTES:
1. ALL LABOR, EQUIPMENT, AND MATERIAL TO PROVIDE WORK AS SHOWN IN THIS DETAIL SHALL BE CONSIDERED TO BE INCLUDED FOR PAYMENT IN THE LUMP SUM PAY ITEM, "TEMPORARY WATER SYSTEM."

1 TEMPORARY WATER SERVICE CONNECTION
NOT TO SCALE

I HEREBY CERTIFY that this plan, specification or report was prepared by me or under my direct supervision and that I am a duly Licensed Professional Engineer under the laws of the State of Minnesota.

BRAD SCOTT
PRINTED NAME

SIGNATURE

02-23-17
DATE

46198
LIC. NO.

MICHIGAN ST. 3RD-1ST AVE WEST

LHB PROJECT NO. 160811

CITY PROJECT NO. 1601

CONSTRUCTION DETAILS

TEMPORARY WATER SERVICE SYSTEM

SHEET NO. 15 OF 49 SHEETS

PLOT DATE: 2/24/2017 9:04:05 AM FILE: R:\16Proj\160811\600 Drawings\C\160811_07.2_Temporary Water Details.dwg

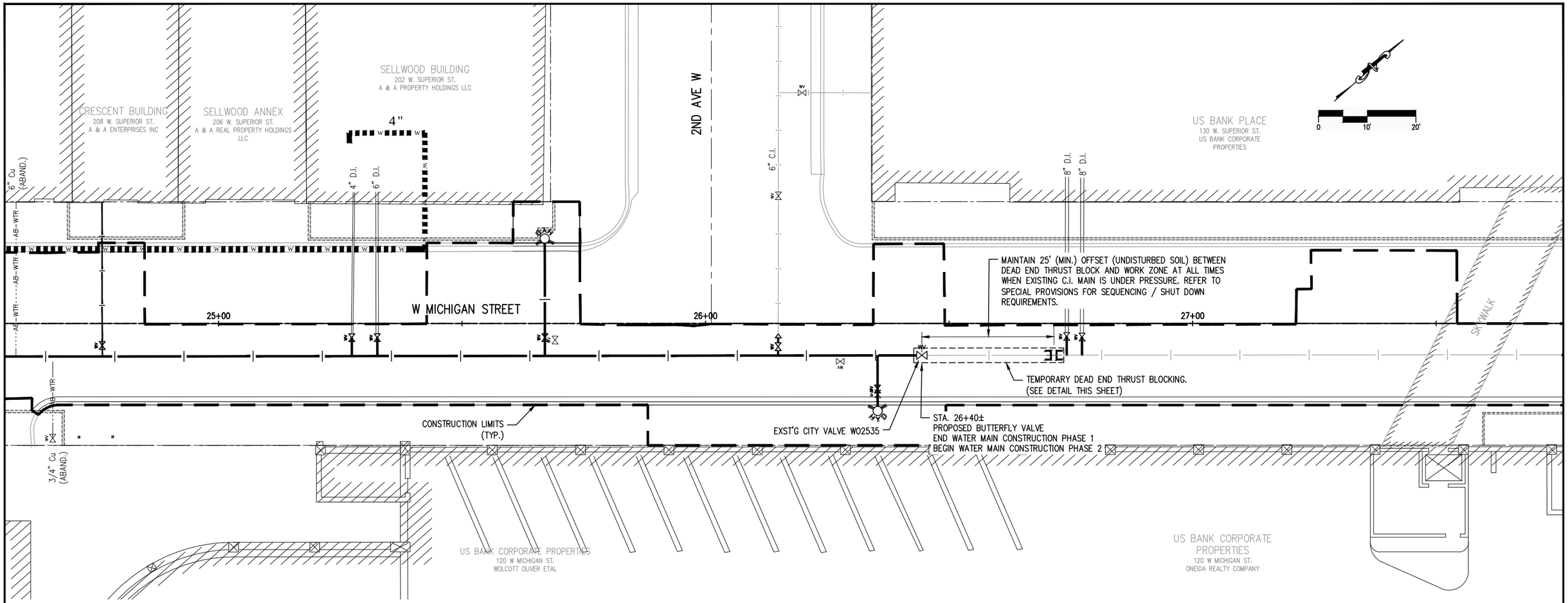

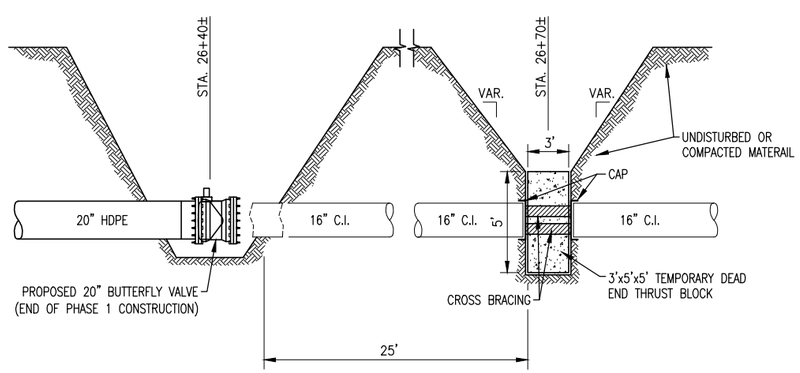

NOTES:
1. ALL LABOR, EQUIPMENT, AND MATERIAL TO PROVIDE WORK AS SHOWN IN THIS DETAIL SHALL BE CONSIDERED TO BE INCLUDED FOR PAYMENT IN THE LUMP SUM PAY ITEM, "TEMPORARY WATER SYSTEM."
2. TEMPORARY THRUST BLOCKING SHALL BE REMOVED WHEN NO LONGER REQUIRED (INCIDENTAL).
3. WRAP CAPS IN PLASTIC FOR SALVAGE AND RE-USE.

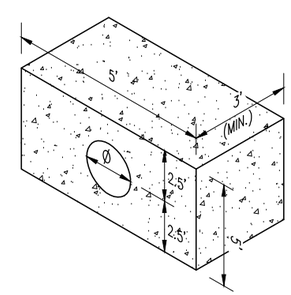

1 TEMPORARY DEAD END THRUST BLOCKING
NOT TO SCALE

PHASE 1 DETAIL

I HEREBY CERTIFY that this plan, specification or report was prepared by me or under my direct supervision and that I am a duly Licensed Professional Engineer under the laws of the State of Minnesota.

BRAD SCOTT
PRINTED NAME

SIGNATURE

02-23-17
DATE

46198
LIC. NO.

MICHIGAN ST. 3RD-1ST AVE WEST

LHB PROJECT NO. 160811

CITY PROJECT NO. 1601

TEMPORARY WATER SERVICE SYSTEM

SHEET NO. 16 OF 49 SHEETS

PLOT DATE: 2/24/2017 9:04:28 AM FILE: R:\16Pro\160811\600 Drawings\C\160811_07.3_Temporary Water Details.dwg

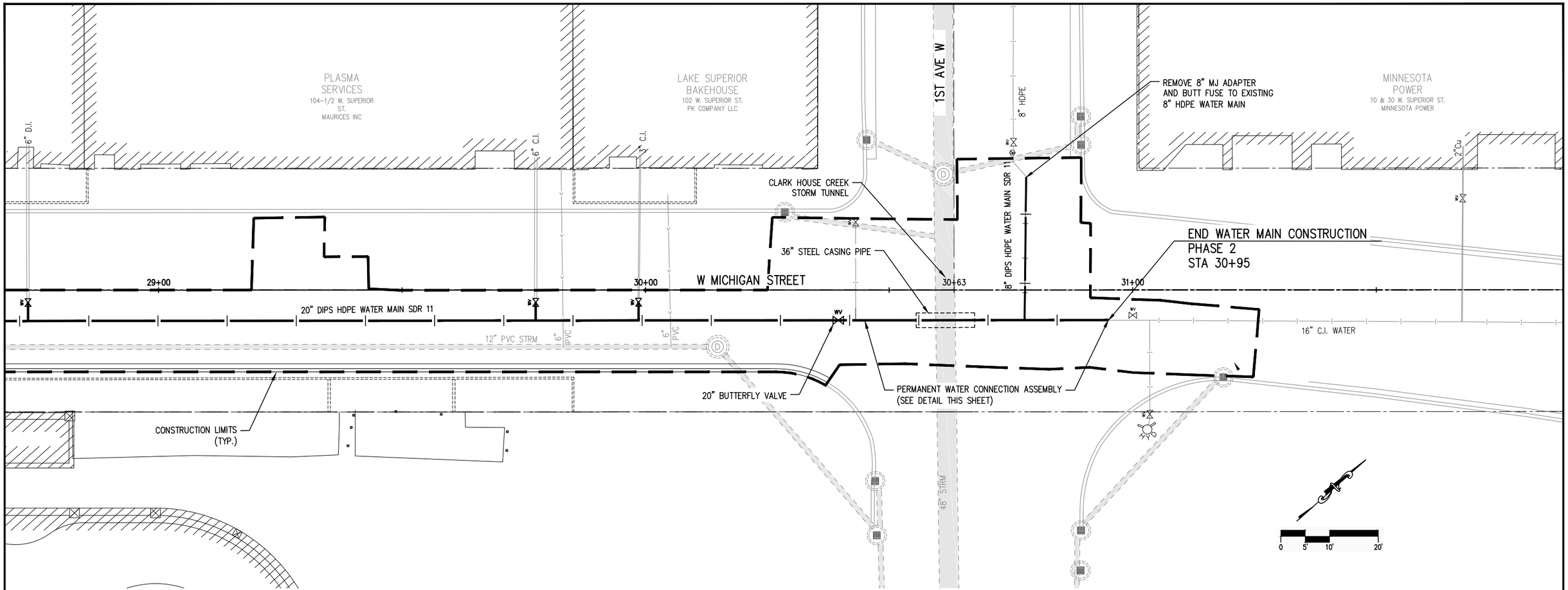

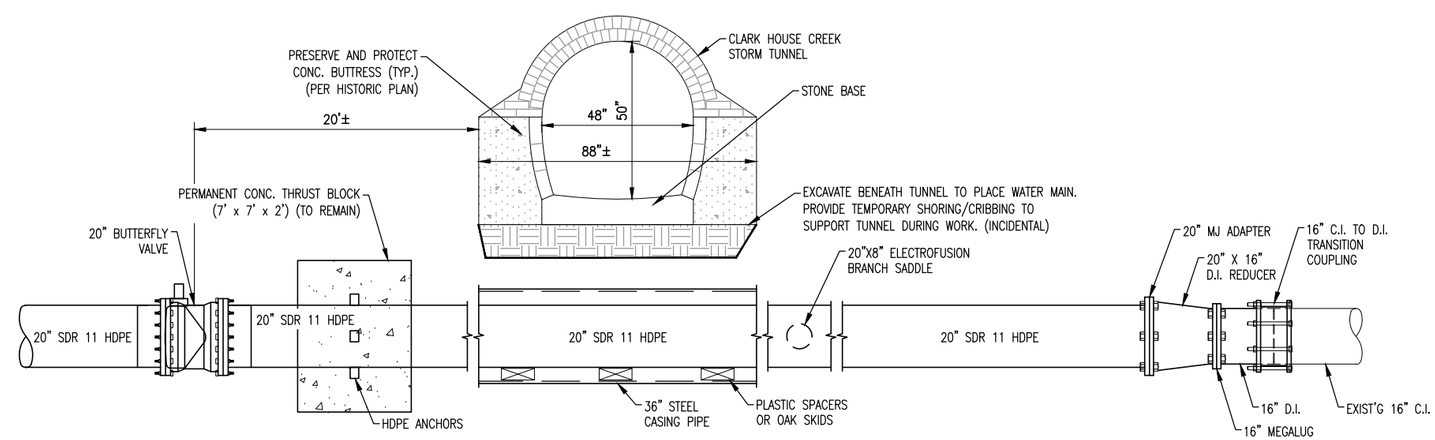

NOTES:

1. ALL LABOR, EQUIPMENT, AND MATERIAL TO PROVIDE PERMANENT THRUST BLOCK, HDPE ANCHORS, AND CONNECTION TO EXIST'G C.I. WATER MAIN. SHALL BE CONSIDERED TO BE INCLUDED FOR PAYMENT UNDER PAY ITEM, "CONNECT TO EXISTING WATER MAIN" BY THE EACH.

1 PERMANENT WATER CONNECTION ASSEMBLY
NOT TO SCALE

PLOT DATE: 2/24/2017 10:07:32 AM FILE: R:\16Pro\160811\600 Drawings\C\160811_07.3_Temporary Water Details.dwg

I HEREBY CERTIFY that this plan, specification or report was prepared by me or under my direct supervision and that I am a duly Licensed Professional Engineer under the laws of the State of Minnesota.

BRAD SCOTT
PRINTED NAME

SIGNATURE

02-23-17
DATE

46198
LIC. NO.

MICHIGAN ST. 3RD-1ST AVE WEST

LHB PROJECT NO. 160811

CITY PROJECT NO. 1601

PHASE 2 DETAIL

TEMPORARY WATER SERVICE SYSTEM

SHEET NO. 17 OF 49 SHEETS

TRAFFIC CONTROL NOTES

1. THE CONTRACTOR SHALL FURNISH, INSTALL AND MAINTAIN THE DEVICES IN THIS TRAFFIC CONTROL PLAN UNLESS OTHERWISE NOTED.
2. ALL TRAFFIC CONTROL DEVICES SHALL CONFORM TO THE MINNESOTA MANUAL ON UNIFORM TRAFFIC CONTROL DEVICES (MMUTCD) INCLUDING " "TEMPORARY TRAFFIC CONTROL ZONE LAYOUTS" DATED JANUARY 2014. AVAILABLE AT: (http://www.dot.state.mn.us/trafficeng/publ/fieldmanual/fieldmanual.pdf)
3. FIELD CONDITIONS MAY REQUIRE MODIFICATIONS OF THIS LAYOUT AS DEEMED NECESSARY BY THE ENGINEER.
4. THE NUMBER AND PLACEMENT OF TRAFFIC CONTROL DEVICES WILL DEPEND UPON THE SEQUENCE OF THE CONTRACTOR'S OPERATION.
5. ALL DISTANCES DEPICTED ARE APPROXIMATE.
6. THE CONTRACTOR IS RESPONSIBLE FOR PROTECTING ANY WORK AREAS NEAR TRAFFIC IN ACCORDANCE WITH THE MMUTCD.
7. IF THE CONTRACTOR DECIDES TO PERFORM THE CONSTRUCTION WORK IN A SEQUENCE OTHER THAN SHOWN IN THIS TRAFFIC CONTROL PLAN, THE CONTRACTOR SHALL PROVIDE COMPLETE REVISED TRAFFIC CONTROL PLANS TO BE APPROVED BY THE ENGINEER.
8. ALL TRAFFIC CONTROL DEVICES, INCLUDING OVERHEAD SIGNS ON ROADS OPEN TO TRAFFIC THAT ARE NOT CONSISTENT WITH TRAFFIC OPERATION, SHALL BE COVERED, REMOVED OR REVISED AS DIRECTED BY THE ENGINEER.
9. "ROAD WORK AHEAD" SIGNS SHALL BE MOUNTED APPROX. 300 FT (1 BLOCK) IN ADVANCE OF THE CONSTRUCTION AND SHALL HAVE A TYPE "A" LOW INTENSITY FLASHING AMBER WARNING LIGHT MOUNTED ON THEM.
10. "ROAD CLOSED AHEAD" SIGNS SHALL BE ERECTED APPROX. 300 FT (1 BLOCK) IN ADVANCE OF THE CLOSURE.
11. "ROAD CLOSED TO THRU TRAFFIC" SIGNS SHALL BE INSTALLED ON TYPE III BARRICADES AND SHALL BE LOCATED AT A POINT IN THE STREET AS TO PERMIT LOCAL TRAFFIC USE BUT EFFECTIVELY DISCOURAGE THRU TRAFFIC USE.
12. WHEN A "ROAD CLOSED TO THRU TRAFFIC" SIGN IS USED, THE "STOP" OR "YIELD" SIGN AT THAT INTERSECTION SHALL BE LEFT IN PLACE OR MOVED TO A SUITABLE LOCATION WHERE THE DRIVER CAN STILL SEE THE SIGN.
13. "ROAD CLOSED" SIGNS MAY BE USED WHERE THE ROADWAY IS CLOSED TO ALL TRAFFIC EXCEPT CONTRACTOR'S EQUIPMENT OR OFFICIALLY AUTHORIZED VEHICLES.
14. TYPE "A" LOW INTENSITY AMBER WARNING LIGHTS SHALL BE MOUNTED ON ALL ADVANCE WARNING SIGNS AND ON ALL TYPE I AND TYPE III BARRICADES WHEN USED AT NIGHT OR TO IDENTIFY HAZARDS.
15. ADDITIONAL SIGNING MAY BE REQUIRED FOR SEPARATE LANE CLOSURES. THE SIGNING SHALL BE IN CONFORMANCE WITH "TEMPORARY TRAFFIC CONTROL ZONE LAYOUTS" FIELD MANUAL DATED JANUARY 2014 AND SHALL BE CONSIDERED INCIDENTAL.
16. THE CONTRACTOR SHALL PLACE DRUMS THROUGHOUT THE PROJECT TO DELINEATE HAZARDOUS AREAS AND FACILITATE DAY-TO-DAY CHANNELIZATION OF TRAFFIC (INCIDENTAL).
17. THE CONTRACTOR SHALL PLACE PRECAST BARRIER OR BARRIERS ADJACENT TO ANY DROP OFFS OR OPEN EXCAVATION WITHIN 10-FT OF A LANE CARRYING TRAFFIC (INCIDENTAL).
18. FOR CONVERSION OF MICHIGAN STREET TO TWO-WAY TRAFFIC, THE CONTRACTOR SHALL OBTAIN NO-PARKING SIGNS FROM CITY OF DULUTH AND POST AT METERED STALLS AND LOADING ZONES AND OTHER LOCATIONS AS NEEDED TO KEEP STREET CLEAR.

TRAFFIC CONTROL PHASING

THE PHASES OF WORK DEPICTED FOR TRAFFIC CONTROL DIRECTLY CORRELATE WITH THE PHASES IDENTIFIED IN THE PROJECT TEMPORARY WATER SERVICE SYSTEM PLANS AND THE TWO PLANS COMPLEMENT ONE ANOTHER WITH REGARD TO WATER SERVICE WORK AND TO ENSURE ACCESS TO ADJACENT BUSINESSES AND PARKING. NO DEVIATIONS FROM THE TRAFFIC CONTROL PLAN SHALL BE PERMITTED WITHOUT THE APPROVAL OF THE ENGINEER.

THE FOLLOWING PRIMARY SCOPE OF WORK SHALL BE COMPLETED UNDER EACH PHASE (REFER TO SPECIAL PROVISIONS UNDER TEMPORARY WATER SERVICE SYSTEM AND TRAFFIC CONTROL FOR TIMING AND INTERMEDIATE COMPLETION DATE REQUIREMENTS):

PHASE 1: INSTALLATION OF UTILITIES AND PAVEMENT RESTORATION FROM 3RD AVE WEST TO 2ND AVE WEST. INCLUDES CLOSURE OF 2ND AVE WEST BETWEEN SUPERIOR STREET AND MICHIGAN STREET FOR CONSTRUCTION STAGING.

PHASE 2: INSTALLATION OF UTILITIES AND PAVEMENT RESTORATION FROM 2ND AVE WEST TO 1ST AVE WEST. INCLUDES CLOSURE OF 1ST AVE WEST BETWEEN SUPERIOR STREET AND MICHIGAN STREET FOR CONSTRUCTION STAGING. PHASE 2 ALSO INCLUDES CLOSURE OF MICHIGAN STREET AT MINNESOTA POWER FOR SPOT CONCRETE SURFACING REPAIRS.

"M" SERIES

SIGN	SIGN NO.	COLOR	SIZE
END DETOUR	M4-8a	BLACK ON ORANGE	24" X 18"
⇨	M6-1R	BLACK ON ORANGE	21" X 15"
DETOUR ⇦	M4-9L	BLACK ON ORANGE	30" X 24"
DETOUR ⇨	M4-9R	BLACK ON ORANGE	30" X 24"
DETOUR ⇧	M4-9S	BLACK ON ORANGE	30" X 24"

"R" SERIES

SIGN	SIGN NO.	COLOR	SIZE
STOP	R1-1	WHITE ON RED	30" X 30"
	R3-1	BLACK ON WHITE	24" X 24"
	R3-2	BLACK ON WHITE	24" X 24"
	R3-18 MODIFIED	BLACK ON WHITE	24" X 24"
	R4-7	BLACK ON WHITE	18" X 24"
DO NOT ENTER	R5-1	RED ON WHITE	30" X 30"
ROAD CLOSED	R11-2	BLACK ON WHITE	48" X 30"
ROAD CLOSED TO THRU TRAFFIC	R11-4	BLACK ON ORANGE	60" X 30"
SIDEWALK CLOSED	R9-9	BLACK ON WHITE	24" X 12"

"R" SERIES CONT.

SIGN	SIGN NO.	COLOR	SIZE
ONE WAY ⇦	R6-2L	BLACK ON ORANGE	18" X 24"
ONE WAY ⇨	R6-2R	BLACK ON ORANGE	18" X 24"

"D" SERIES

SIGN	SIGN NO.	COLOR	SIZE
MICHIGAN ST.	D3-1	BLACK ON ORANGE	VAR. x 12"
US BANK RAMP	D3-1	BLACK ON ORANGE	VAR. x 12"

"W" SERIES

SIGN	SIGN NO.	COLOR	SIZE
ROAD WORK AHEAD	W20-1	BLACK ON ORANGE	36" x 36"
DETOUR AHEAD	W20-2	BLACK ON ORANGE	36" x 36"
ROAD CLOSED AHEAD	W20-3	BLACK ON ORANGE	36" x 36"

"G" SERIES

SIGN	SIGN NO.	COLOR	SIZE
END ROAD WORK	G20-2A	BLACK ON ORANGE	36" X 18"

DEVICES

ITEM	SIGN NO.	COLOR	SIZE
	DLC		
	TYPE III		
F	TYPE IV		
	WEIGHTED CHANNELIZER		

I HEREBY CERTIFY that this plan, specification or report was prepared by me or under my direct supervision and that I am a duly Licensed Professional Engineer under the laws of the State of Minnesota.

BRAD SCOTT
PRINTED NAME

SIGNATURE

02-23-17
DATE

46198
LIC. NO.

MICHIGAN ST. 3RD-1ST AVE WEST

LHB PROJECT NO. 160811

CITY PROJECT NO. 1601

TRAFFIC CONTROL

PLOT DATE: 2/24/2017 8:42:31 AM FILE: R:\16Proj\160811\600 Drawings\C\160811_08_Traffic Control & Phasing Plan.dwg

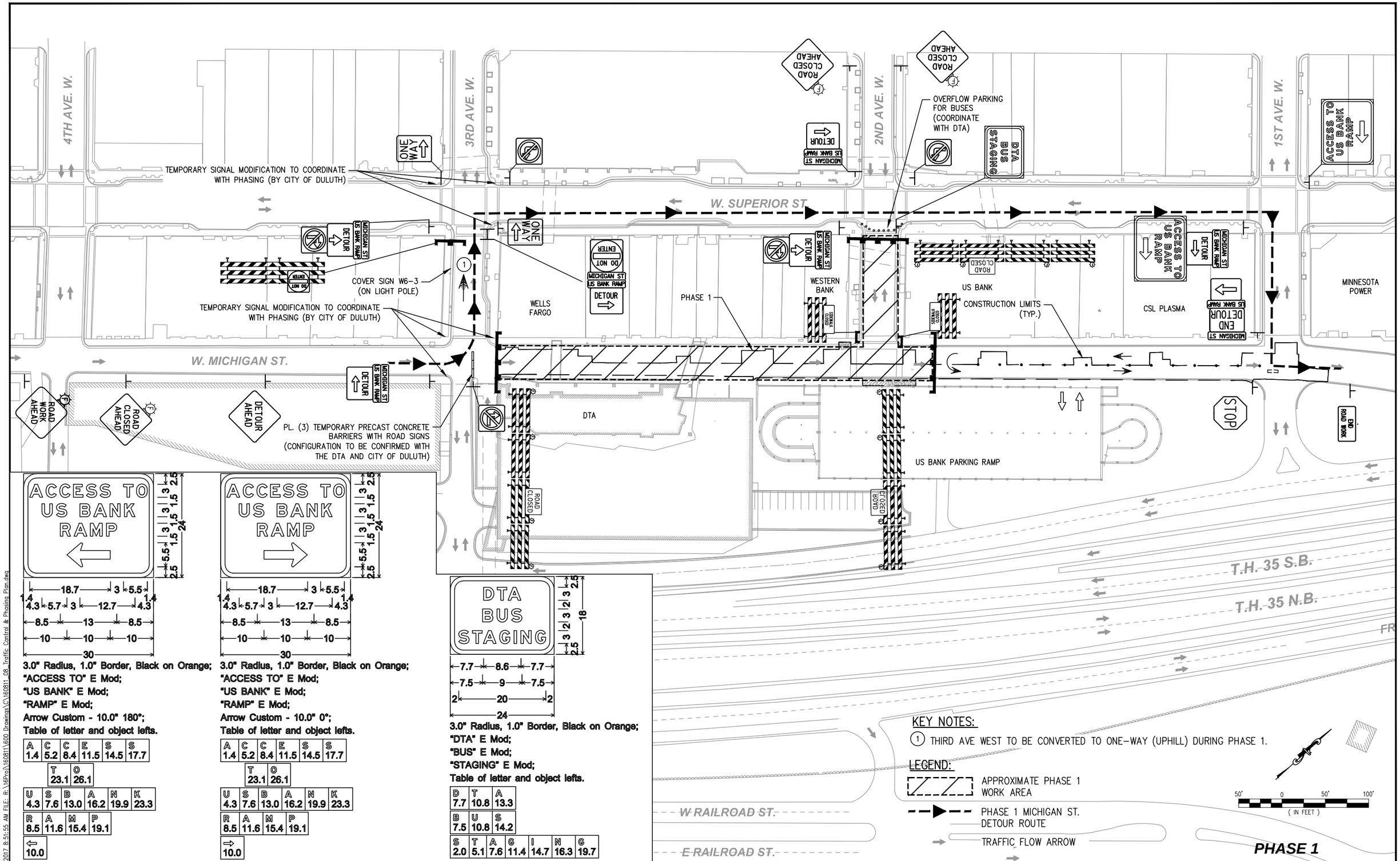

PLOT DATE: 2/24/2017 8:51:55 AM FILE: R:\16Proj\160811\600 Drawings\C\160811_08_Traffic Control & Phasing Plan.dwg

I HEREBY CERTIFY that this plan, specification or report was prepared by me or under my direct supervision and that I am a duly Licensed Professional Engineer under the laws of the State of Minnesota.

BRAD SCOTT
PRINTED NAME

SIGNATURE

02-23-17
DATE

46198
LIC. NO.

MICHIGAN ST. 3RD-1ST AVE WEST

LHB PROJECT NO. 160811

CITY PROJECT NO. 1601

TRAFFIC CONTROL

SHEET NO. 19 OF 49 SHEETS

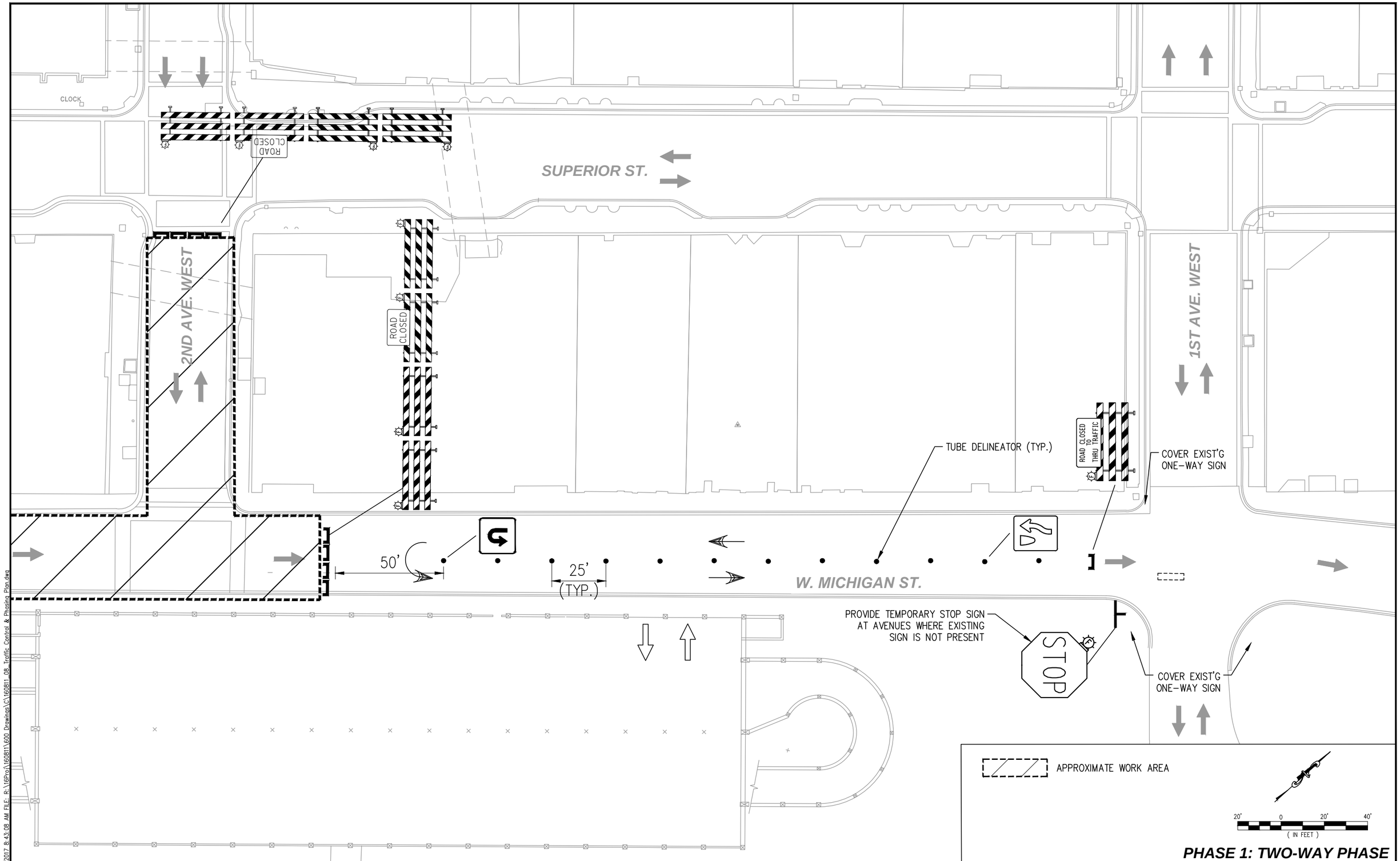

PHASE 1: TWO-WAY PHASE

PLOT DATE: 2/24/2017 8:43:08 AM FILE: R:\16Proj\160811\600 Drawings\C\160811_08_Traffic Control & Phasing Plan.dwg

I HEREBY CERTIFY that this plan, specification or report was prepared by me or under my direct supervision and that I am a duly Licensed Professional Engineer under the laws of the State of Minnesota.

BRAD SCOTT	Brad Scott	02-23-17	MICHIGAN ST. 3RD–1ST AVE WEST
PRINTED NAME	SIGNATURE	DATE	LHB PROJECT NO. 160811
		46198	CITY PROJECT NO. 1601
		LIC. NO.	

TRAFFIC CONTROL

SHEET NO. 20 OF 49 SHEETS

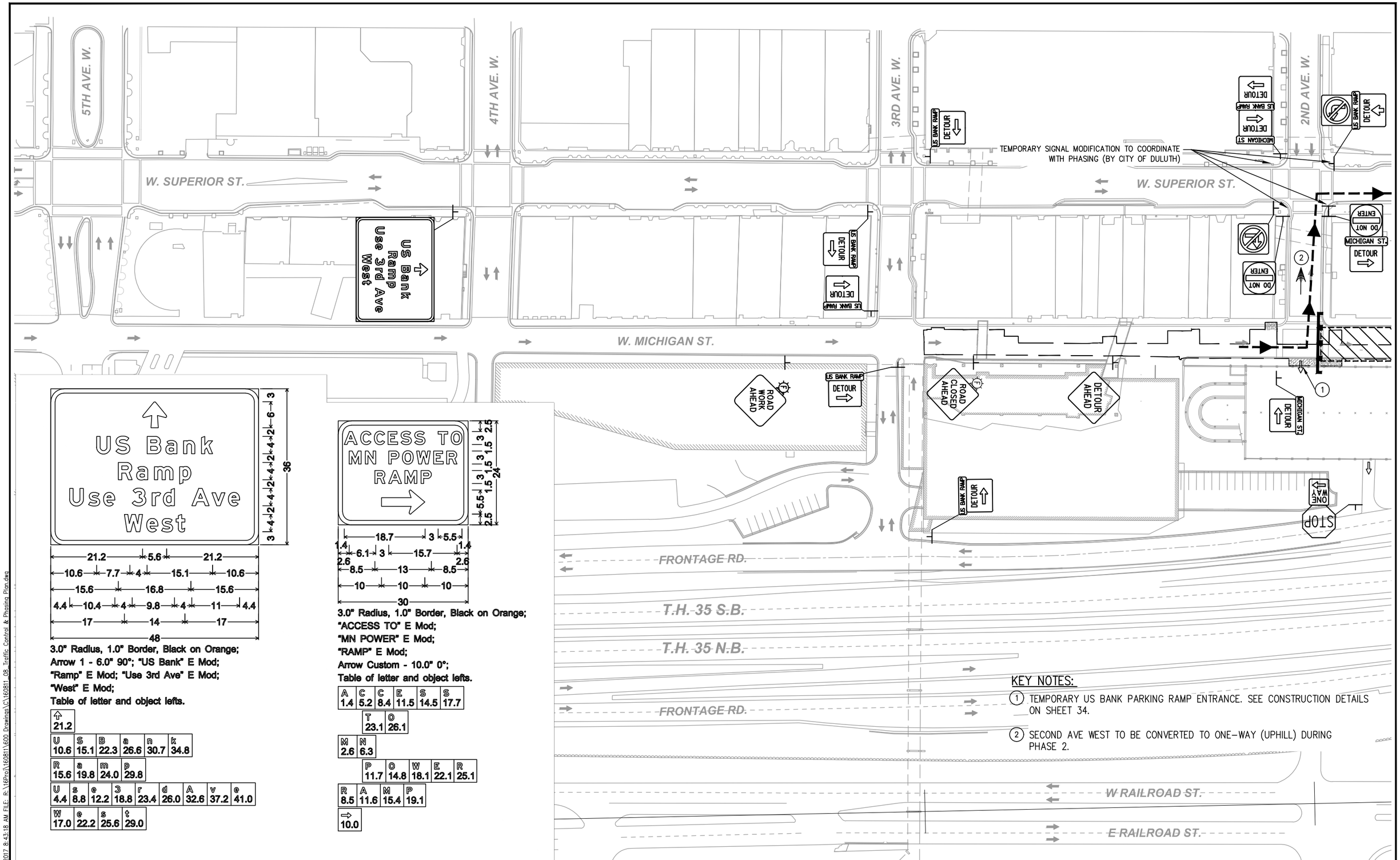

3.0" Radius, 1.0" Border, Black on Orange;
Arrow 1 - 6.0" 90°; "US Bank" E Mod;
"Ramp" E Mod; "Use 3rd Ave" E Mod;
"West" E Mod;
Table of letter and object lefts.

⇧ 21.2					
U 10.6	S 15.1	B 22.3	a 26.6	n 30.7	k 34.8
R 15.6	a 19.8	m 24.0	p 29.8		
U 4.4	s 8.8	e 12.2	3 18.8	r 23.4	d 26.0	A 32.6	v 37.2	e 41.0
W 17.0	e 22.2	s 25.6	t 29.0		

3.0" Radius, 1.0" Border, Black on Orange;
"ACCESS TO" E Mod;
"MN POWER" E Mod;
"RAMP" E Mod;
Arrow Custom - 10.0" 0°;
Table of letter and object lefts.

A 1.4	C 5.2	C 8.4	E 11.5	S 14.5	S 17.7
T 23.1	O 26.1				
M 2.6	N 6.3				
P 11.7	O 14.8	W 18.1	E 22.1	R 25.1	
R 8.5	A 11.6	M 15.4	P 19.1		
⇨ 10.0					

KEY NOTES:

1. TEMPORARY US BANK PARKING RAMP ENTRANCE. SEE CONSTRUCTION DETAILS ON SHEET 34.
2. SECOND AVE WEST TO BE CONVERTED TO ONE-WAY (UPHILL) DURING PHASE 2.

PLOT DATE: 2/24/2017 8:43:18 AM FILE: R:\16Pro\160811\600 Drawings\C\160811_08_Traffic Control & Phasing Plan.dwg

I HEREBY CERTIFY that this plan, specification or report was prepared by me or under my direct supervision and that I am a duly Licensed Professional Engineer under the laws of the State of Minnesota.

BRAD SCOTT
PRINTED NAME

SIGNATURE

02-23-17
DATE

46198
LIC. NO.

MICHIGAN ST. 3RD–1ST AVE WEST

LHB PROJECT NO. 160811

CITY PROJECT NO. 1601

TRAFFIC CONTROL

SHEET NO. 21 OF 49 SHEETS

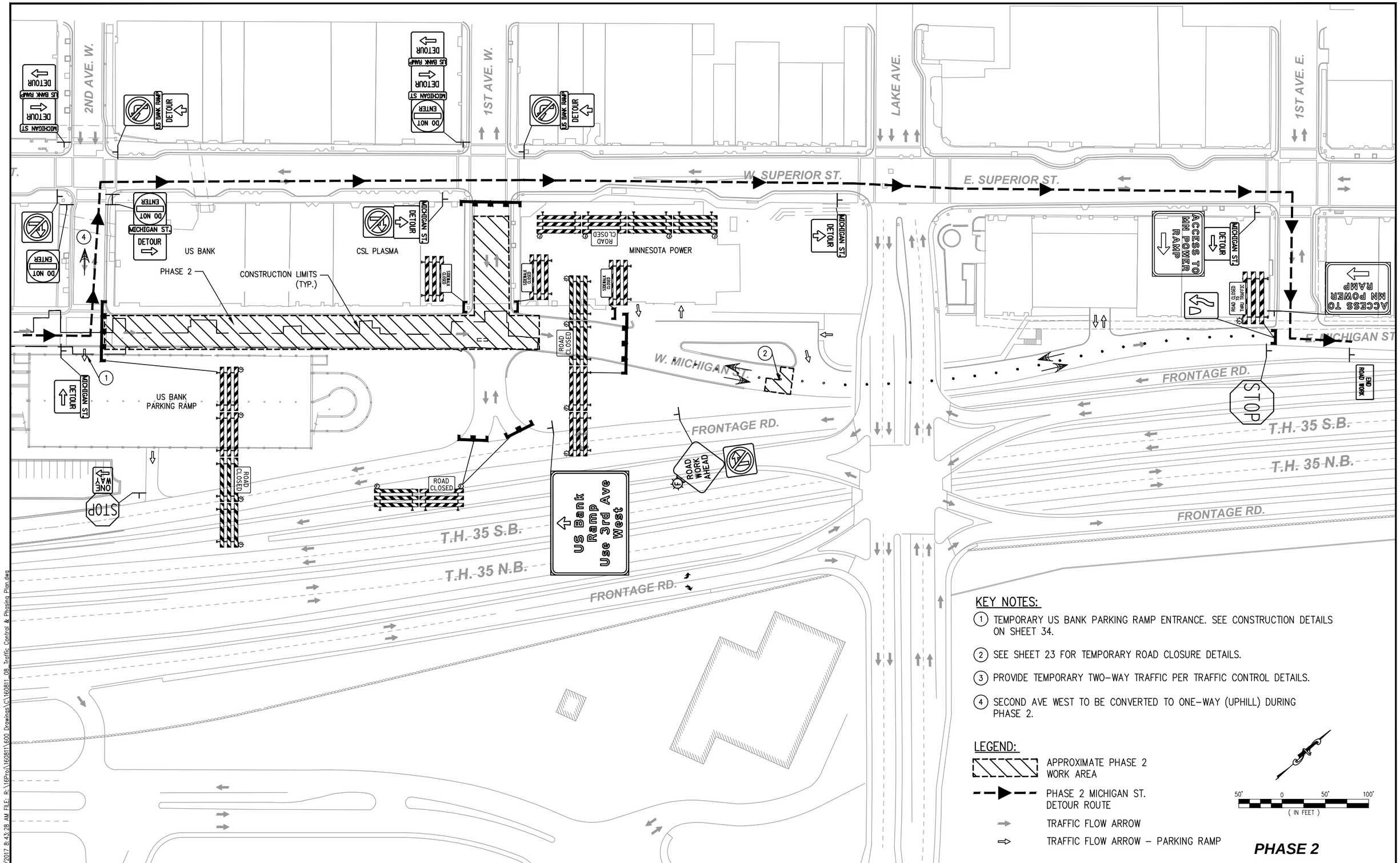

KEY NOTES:

1. TEMPORARY US BANK PARKING RAMP ENTRANCE. SEE CONSTRUCTION DETAILS ON SHEET 34.
2. SEE SHEET 23 FOR TEMPORARY ROAD CLOSURE DETAILS.
3. PROVIDE TEMPORARY TWO-WAY TRAFFIC PER TRAFFIC CONTROL DETAILS.
4. SECOND AVE WEST TO BE CONVERTED TO ONE-WAY (UPHILL) DURING PHASE 2.

LEGEND:

- APPROXIMATE PHASE 2 WORK AREA
- PHASE 2 MICHIGAN ST. DETOUR ROUTE
- TRAFFIC FLOW ARROW
- TRAFFIC FLOW ARROW – PARKING RAMP

50' 0 50' 100'
(IN FEET)

PHASE 2

PLOT DATE: 2/24/2017 8:43:28 AM FILE: R:\16Proj\160811\600 Drawings\C\160811_08_Traffic Control & Phasing Plan.dwg

I HEREBY CERTIFY that this plan, specification or report was prepared by me or under my direct supervision and that I am a duly Licensed Professional Engineer under the laws of the State of Minnesota.	BRAD SCOTT PRINTED NAME	SIGNATURE	02-23-17 DATE 46198 LIC. NO.	MICHIGAN ST. 3RD–1ST AVE WEST LHB PROJECT NO. 160811	CITY PROJECT NO. 1601	TRAFFIC CONTROL SHEET NO. 22 OF 49 SHEETS

1ST AVE. W.

LAKE AVE.

1ST AVE. E.

W. SUPERIOR ST.

E. SUPERIOR ST.

ROAD CLOSED

ROAD CLOSED

ROAD CLOSED

CONSTRUCTION LIMITS (TYP.)

W. MICHIGAN ST.

FRONTAGE RD.

ROAD CLOSED

ROAD CLOSED

T.H. 35 S.B.

T.H. 35 N.B.

FRONTAGE RD.

REMOVE BITUMINOUS PAVEMENT
PL. CONCRETE PAVEMENT 8.0"
PROVIDE TEMPORARY TRAFFIC CONTROL TO CLOSE MICHIGAN STREET AHEAD AND BACK OF THIS LOCATION. MAINTAIN ACCESS TO MINNESOTA POWER PARKING RAMP. CLOSURE SHALL BE LIMITED TO 1 WEEK IN DURATION.

TUBE DELINEATOR (TYP.)

25' (TYP.)

ROAD CLOSED TO THRU TRAFFIC

COVER EXIST'G ONE-WAY SIGN

E. MICHIGAN ST.

COVER EXIST'G ONE-WAY SIGN

FRONTAGE RD.

STOP

PROVIDE TEMPORARY STOP SIGN AT AVENUES WHERE EXISTING SIGN IS NOT PRESENT

T.H. 35 S.B.

T.H. 35 N.B.

FRONTAGE RD.

LEGEND:

APPROXIMATE WORK AREA

40' 0 40' 80'
(IN FEET)

PHASE 2: CONCRETE SURFACING REPAIR

PLOT DATE: 2/24/2017 8:43:40 AM FILE: R:\16Pro\160811\600 Drawings\C\160811_08_Traffic Control & Phasing Plan.dwg

I HEREBY CERTIFY that this plan, specification or report was prepared by me or under my direct supervision and that I am a duly Licensed Professional Engineer under the laws of the State of Minnesota.

BRAD SCOTT
PRINTED NAME

SIGNATURE

02-23-17
DATE

46198
LIC. NO.

MICHIGAN ST. 3RD-1ST AVE WEST

LHB PROJECT NO. 160811

CITY PROJECT NO. 1601

TRAFFIC CONTROL

SHEET NO. 23 OF 49 SHEETS

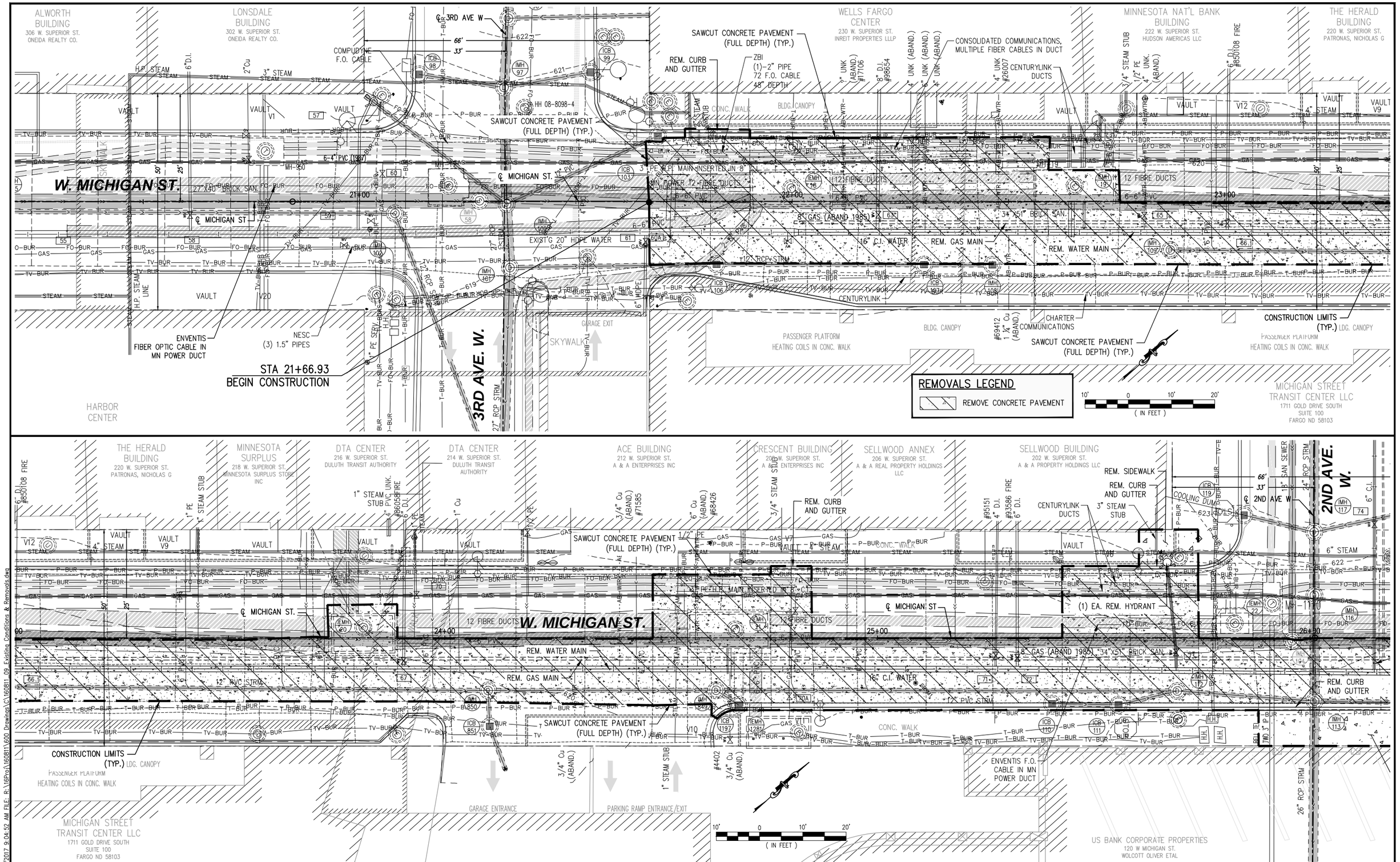

PLOT DATE: 2/24/2017 9:04:52 AM FILE: R:\16Pro\160811\600 Drawings\C\160811_09_Existing Conditions & Removals.dwg

I HEREBY CERTIFY that this plan, specification or report was prepared by me or under my direct supervision and that I am a duly Licensed Professional Engineer under the laws of the State of Minnesota.

BRAD SCOTT	Brad Scott	02-23-17	MICHIGAN ST. 3RD–1ST AVE WEST	CITY PROJECT NO. 1601	EXISTING CONDITIONS & REMOVALS
PRINTED NAME	SIGNATURE	DATE	LHB PROJECT NO. 160811		SHEET NO. 24 OF 49 SHEETS
		46198 LIC. NO.			

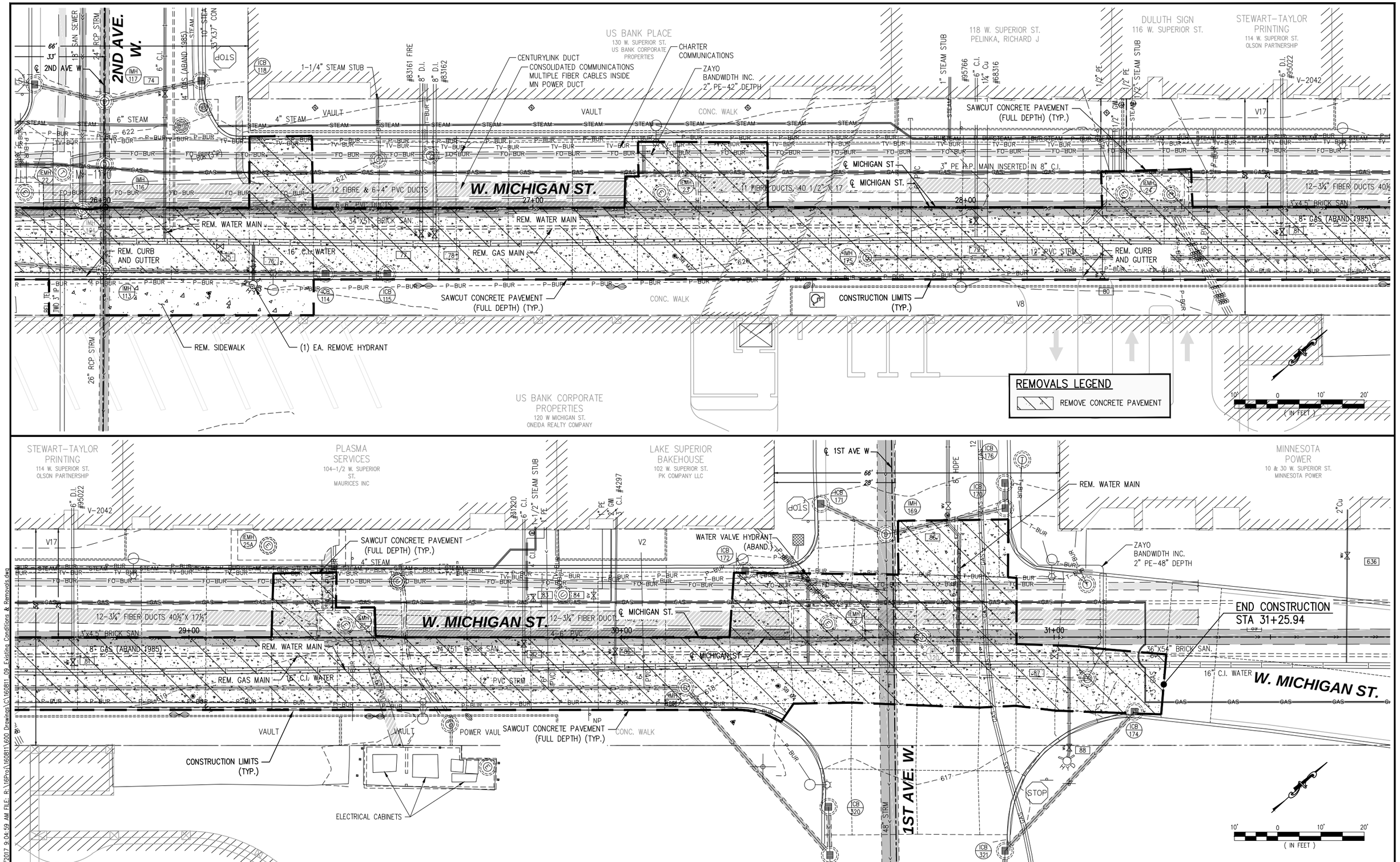

PLOT DATE: 2/24/2017 9:04:59 AM FILE: R:\16Pro\160811\600 Drawings\C\160811_09_Existing Conditions & Removals.dwg

I HEREBY CERTIFY that this plan, specification or report was prepared by me or under my direct supervision and that I am a duly Licensed Professional Engineer under the laws of the State of Minnesota.

BRAD SCOTT	Brad Scott	02-23-17	MICHIGAN ST. 3RD-1ST AVE WEST	CITY PROJECT NO. 1601	EXISTING CONDITIONS & REMOVALS
PRINTED NAME	SIGNATURE	DATE	LHB PROJECT NO. 160811		SHEET NO. 25 OF 49 SHEETS
		46198 LIC. NO.			

EROSION CONTROL NOTES

1. MNDOT (2016 EDITION) STND. SPEC. 1717.2. EROSION CONTROL, SHALL APPLY.
2. THE CONTRACTOR IS RESPONSIBLE FOR EC QUALITY CONTROL ON THIS PROJECT (MNDOT 1717.2 B). CONTRACTOR SHALL PHASE/SEQUENCE THE PROJECT TO MINIMIZE EXPOSURE TO EROSION. CONTRACTOR SHALL PLACE OR OTHERWISE CONSTRUCT EROSION CONTROL AND SEDIMENT CONTAINMENT DEVICES TO MINIMIZE THE RUNOFF, TRACKING, AND SEDIMENT LOSS FROM DISTURBED AREAS OF THE PROJECT SITE.
3. SEDIMENT AND EROSION CONTROL DEVICES SHALL BE FUNCTIONAL BEFORE SITE IS DISTURBED.
4. RECEIVING WATER FOR STORM WATER FROM THE PROJECT AREA INCLUDES EXISTING STORM SEWER SYSTEMS, AND LAKE SUPERIOR.
5. DISTURBED SLOPES NOT ACTIVELY WORKED SHALL BE PROTECTED FROM SOIL EROSION WITH TEMPORARY OR PERMANENT COVER WITHIN PERMIT REQUIREMENTS BUT IN NO CASE GREATER THAN 7 DAYS OF BEING WORKED. USE EROSION CONTROL BLANKET WITH SOIL STAPLES OR ENGINEER APPROVED EQUAL.
6. AT MINIMUM, THE FOLLOWING CONTROLS WILL BE IMPLEMENTED AT THE CONSTRUCTION SITE:
   - EROSION CONTROL BLANKETS SHALL BE USED ON ALL SLOPES 1:3 OR STEEPER.
   - SILT FENCES SHALL BE USED IN CONJUNCTION WITH OTHER EROSION BMP'S.
   - ROCK DITCH CHECKS OR APPROVED EQUAL ARE TO BE USED TO REDUCE DITCH VELOCITIES AND EROSION.
   - STORM INLET AND OUTLET AREAS SHALL BE PROTECTED WITH ROCK RIPRAP.
   - STABILIZED CONSTRUCTION ENTRANCES SHALL BE USED TO REDUCE SEDIMENT TRACKING.
   - PERMANENT VEGETATION WILL BE ESTABLISHED RIGHT AFTER TOPSOIL IS RE-SPREAD.
   - CONTROL ALL SITE WASTED, DEBRIS, MATERIAL STORAGE AND CONCRETE WASHOUT TO PREVENT IMPACTS TO ANY DRAINAGE.
7. ALL SLOPES AND DITCHES SHALL BE STABILIZED PRIOR TO OPENING NEW CULVERTS INTO EXISTING DRAINAGE WAYS.
8. IF ANY STOCKPILE IS TO REMAIN IN PLACE FOR MORE THAN 3 DAYS, SEDIMENT AND EROSION CONTROL DEVICES SHALL BE USED.
9. WATER PUMPED OR OTHERWISE DISCHARGED FROM THE SITE DURING CONSTRUCTION DEWATERING SHALL BE DIRECTED THROUGH EFFECTIVE FILTERING DEVICE(S).
10. THE CONTRACTOR SHALL TAKE ALL POSSIBLE PRECAUTIONS TO PREVENT APPRECIABLE SOIL TRACKING ONTO ROADWAYS. APPRECIABLE SOIL, MUD, OR DEBRIS WASHED, TRACKED, OR DEPOSITED ONTO PAVED SURFACES SHALL BE REMOVED PRIOR TO THE END OF EACH WORKDAY.
11. STABILIZED CONSTRUCTION ENTRANCE(S) SHALL BE REMOVED AND AREA RESTORED AFTER GRADING IS COMPLETE.
12. MNDOT 1717.2 B, THE CONTRACTOR QC PROGRAM SHALL ENSURE THAT A COMPETENT INDIVIDUAL SHALL INSPECT EROSION AND SEDIMENT CONTROL DEVICES WEEKLY AND AFTER EACH RAIN EVENT. ALL NONFUNCTIONAL DEVICES SHALL BE REPAIRED, REPLACED, OR CLEANED.
13. WHERE NOT OTHERWISE SPECIFIED, RAPID STABILIZATION METHOD 4 SHALL BE USED WHEN QUICK STABILIZATION IS NEEDED. USE CATEGORY 3 EROSION CONTROL BLANKET (ECB) [NORTH AMERICAN GREEN S150 OR APPROVED EQUAL]. USE WITH SEED MIXTURE 22-112 PER MNDOT 2575.3. THE UPGRADE END OF EACH BLANKET STRIP SHALL BE BURIED AT LEAST 6-INCHES IN A VERTICAL CHECK SLOT. STAPLES SHALL BE PLACED AT SEAMS AND THROUGHOUT THE BLANKET AT A MAXIMUM SPACING IN ALL DIRECTIONS OF 3-FEET. PAYMENT ALLOWED SHALL BE $2.50 PER SY.
14. THIS EROSION CONTROL PLAN IS A STARTING POINT FOR EROSION PREVENTION AND SEDIMENT CONTROL ON THE SITE, AND THE CONTRACTOR'S OPERATIONS AND PHASING OF THE CONSTRUCTION ACTIVITY SHALL REQUIRE THE CONTRACTOR TO MODIFY AND AMEND THIS PLAN AS CONDITIONS WARRANT AND AS BMP'S ARE ADDED, DELETED, OR MODIFIED ON THE SITE. ANY AMENDMENTS SHALL BE NOTED ON THE PLAN AND KEPT AS A RECORD AVAILABLE AT THE SITE.

CONSTRUCTION PRACTICES TO MINIMIZE STORM WATER CONTAMINATION

TO PREVENT STORM WATER CONTAMINATION FROM OCCURRING, THE FOLLOWING BMP'S WILL BE IMPLEMENTED.

1. ALL AREAS THAT ARE ROUGH GRADED MUST BE KEPT IN A SMOOTH CONDITION TO ALLOW SHEET FLOW OF STORM WATER WHEREVER PRACTICAL AND ALWAYS READY FOR SURFACE APPLICATION OF DEGRADABLE OR NON-DEGRADABLE BLANKETS, MULCH, OR OTHER PROTECTIVE COVERS.
2. A STABILIZED CONSTRUCTION ENTRANCE/EXIT WILL BE CONSTRUCTED TO REDUCE VEHICLE TRACKING OF SEDIMENTS OFF THE PROJECT RIGHT-OF-WAY.
3. ALL NON-HAZARDOUS WASTE MATERIALS WILL BE COLLECTED AND STORED IN A SECURELY LIDDED METAL DUMPSTER OR OTHER APPROVED CONTAINMENT METHOD AT THE END OF EACH DAY. ANY ALTERNATIVE TO A METAL DUMPSTER MUST BE SUBMITTED IN WRITING FOR APPROVAL BY THE PROJECT ENGINEER. ALL TRASH AND CONSTRUCTION DEBRIS FROM THE SITE WILL BE DEPOSITED IN THE DUMPSTER. THE DUMPSTER WILL BE EMPTIED AS NECESSARY TO FUNCTION AS INTENDED FOR DEBRIS COLLECTION. NO CONSTRUCTION MATERIALS WILL BE BURIED ON-SITE. THE CONTRACTOR'S EROSION CONTROL SUPERVISOR WILL INSTRUCT ALL PERSONNEL REGARDING THE CORRECT PROCEDURE FOR DISPOSAL.
4. A LICENSED SANITARY WASTE MANAGEMENT CONTRACTOR WILL COLLECT ALL SANITARY WASTE FROM THE PORTABLE UNITS AT A RATE NECESSARY TO MAINTAIN DESIGNED FUNCTION.
5. ALL VEHICLES ON SITE WILL BE MONITORED FOR LEAKS AND RECEIVE REGULAR PREVENTATIVE MAINTENANCE TO REDUCE THE CHANCE OF LEAKAGE.
6. FERTILIZERS WILL BE STORED IN A COVERED SHED AND PARTIALLY USED BAGS WILL BE TRANSFERRED TO A SEALABLE BIN TO REDUCE THE CHANCE OF SPILLAGE.
7. PETROLEUM PRODUCTS WILL BE STORED IN TIGHTLY SEALED CONTAINERS, WHICH ARE CLEARLY LABELED.
8. SPILL KITS WILL BE INCLUDED WITH ALL FUELING SOURCES AND MAINTENANCE ACTIVITIES. SECONDARY CONTAINMENT MEASURES WILL BE INSTALLED AND MAINTAINED BY THE CONTRACTOR.
9. ANY ASPHALT SUBSTANCES USED ON SITE WILL BE APPLIED IN ACCORDANCE WITH MANUFACTURER'S RECOMMENDATIONS.
10. ALL PAINT CONTAINERS AND CURING COMPOUNDS WILL BE TIGHTLY SEALED AND STORED WHEN NOT REQUIRED FOR USE. EXCESS PAINT WILL NOT BE DISCHARGED TO THE STORM WATER SYSTEM BUT WILL BE PROPERLY DISPOSED OF ACCORDING TO MANUFACTURER'S INSTRUCTION.
11. MATERIALS AND EQUIPMENT NECESSARY FOR SPILL CLEAN-UP WILL BE KEPT IN AN ENCLOSED TRAILER OR SHED ON SITE. EQUIPMENT WILL INCLUDE, BUT NOT BE LIMITED TO, BROOMS, MOPS, DUST PANS, RAGS, GLOVES, GOGGLES, ABSORBENT MATERIAL (KITTY LITTER), OIL ABSORBENT BROOMS AND DIAPERS, AND BUCKETS.
12. ALL SPILLS WILL BE CONTAINED AND CLEANED UP IMMEDIATELY UPON DISCOVERY. SPILLS LARGE ENOUGH TO REACH THE STORM WATER CONVEYANCE SYSTEM WILL BE REPORTED TO THE MINNESOTA DUTY OFFICER AT (800) 422-0798.
13. CONCRETE TRUCKS WILL NOT BE ALLOWED TO WASH OUT OR DISCHARGE SURPLUS CONCRETE OR DRUM WASTE WATER ON THE SITE, UNLESS DONE IN AN ENGINEERED CONTAINMENT SYSTEM. THE ENGINEERED SYSTEM MUST INCLUDE SITE DRAWINGS FOR THE PROJECT FILE AND WRITTEN ASSURANCE THAT THE SYSTEM WILL WORK AS DESIGNED AND LEAVE NO DISCHARGE OF CONCRETE OR CONCRETE RESIDUE POTENTIAL TO WATERS OF THE STATE DURING A MINIMUM OF A 100-YEAR STORM EVENT.
14. FORM RELEASE OIL USED FOR CONCRETE WORK MUST BE APPLIED FOR A PALLET CONTAINING ABSORBENT TO COLLECT EXCESS LIQUID. THE ABSORBENT MATERIAL WILL BE REPLACED AND PROPERLY DISPOSED OF WHEN SATURATED.
15. DISCHARGES FROM BASIN DEWATERING OPERATIONS THAT ARE TURBID OR SEDIMENT LADEN SHALL BE DISCHARGED TO A TEMPORARY SEDIMENT BASINS CONSTRUCTED ON THE SITE TO PROVIDE TREATMENT PRIOR TO DISCHARGE TO A WATER OF THE STATE. IF BASINS ARE NOT FEASIBLE, DISCHARGES WILL BE DISPERSED OVER NATURAL ROCK RIPRAP, SHEETING, PLASTIC OR OTHER ENERGY DISSIPATION MEASURES.

PROJECT DETAILS

SUMMARY OF PERVIOUS AND IMPERVIOUS			
TOTAL DISTURBED AREA (Ac)	EXISTING IMPERVIOUS AREA (Ac)	POST CONSTRUCTION IMPERVIOUS AREA (Ac)	NET INCREASE/ DECREASE IMPERVIOUS AREA (Ac)
0.48	0.48	0.48	0.00

KEY NOTES:

(1) PAID FOR AS STORM DRAIN INLET PROTECTION ONCE AT EACH LOCATION REGARDLESS OF THE NUMBER OR TYPE USED. INCLUDES PERIODIC MAINTENANCE AND CLEANING AS REQUIRED.

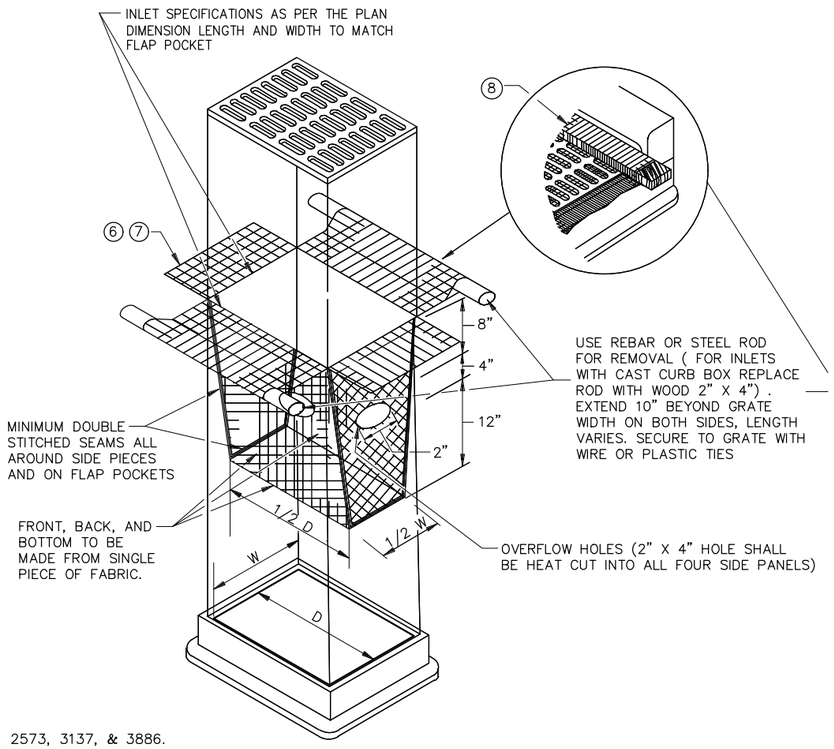

NOTES:

SEE SPECS. 2573, 3137, & 3886.

DEVICES MUST BE ADJUSTED ACCORDINGLY AS TO NOT CAUSE FLOODING ON ROADWAY THAT WOULD IMPEED TRAFFIC FLOW.

(6) ALL GEOTEXTILE USED FOR INLET PROTECTION SHALL BE MONOFILAMENT IN BOTH DIRECTIONS, MEETING SPEC. 3886.

(7) FINISHED SIZE, INCLUDING POCKETS WHERE REQUIRED SHALL EXTEND A MINIMUM OF 10 INCHES AROUND THE PERIMETER TO FACILITATE MAINTENANCE OR REMOVAL.

(8) INSTALLATION NOTES:
DO NOT PLACE FILTER BAG INSERT IN INLETS SHALLOWER THAN 30 INCHES, MEASURED FROM THE BOTTOM OF THE INLET TO THE TOP OF THE GRATE. THE PLACED BAG SHALL HAVE A MINIMUM SIDE CLEARANCE OF 3 INCHES BETWEEN THE INLET WALLS AND THE BAG, MEASURED AT THE BOTTOM OF THE OVERFLOW HOLES. WHERE NECESSARY THE CONTRACTOR SHALL CLINCH THE BAG, USING PLASTIC ZIP TIES, TO ACHIEVE THE 3 INCH SIDE CLEARANCE.

FILTER BAG INSERT (8)

(CAN BE INSTALLED IN ANY INLET TYPE WITH OR WITHOUT A CURB BOX)

1 INLET PROTECTION, TYPE I (1)

NOT TO SCALE

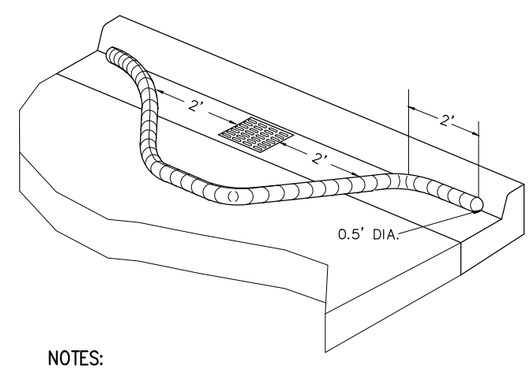

NOTES:

1. COMPOST LOG, TYPE B ARE APPROX. 10' LONG & 0.5' DIAMETER GEOTEXTILE FABRIC USED IS THE SAME AS THE MACHINE SLICED FABRIC. FILL WITH GRADE 2 COMPOST. FABRIC AND COMPOST ARE INCIDENTAL. PAYMENT IS PER EACH INSTALLED.
2. TO BE USED ON ALL INLETS WITH CURB CUT OPENINGS.

2 INLET PROTECTION COMPOST LOG, TYPE II (1)

NOT TO SCALE

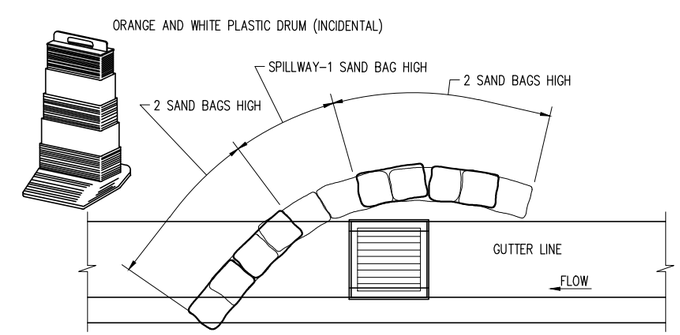

NOTES:

1. CATCH BASIN INLET PROVIDE SEDIMENT SACK DANDY BAG II/DANDY SACK OR EQUIVALENT (INCIDENTAL).

3 SAND BAG INLET PROTECTION, TYPE III (1)

NOT TO SCALE

PLOT DATE: 2/24/2017 9:05:16 AM FILE: R:\16Proj\160811\600 Drawings\C\160811_10_SWPPP.dwg

I HEREBY CERTIFY that this plan, specification or report was prepared by me or under my direct supervision and that I am a duly Licensed Professional Engineer under the laws of the State of Minnesota.	BRAD SCOTT PRINTED NAME	SIGNATURE	02-23-17 DATE 46198 LIC. NO.	MICHIGAN ST. 3RD-1ST AVE WEST LHB PROJECT NO. 160811	CITY PROJECT NO. 1601	EROSION & SEDIMENT CONTROL PLAN SHEET NO. 27 OF 49 SHEETS

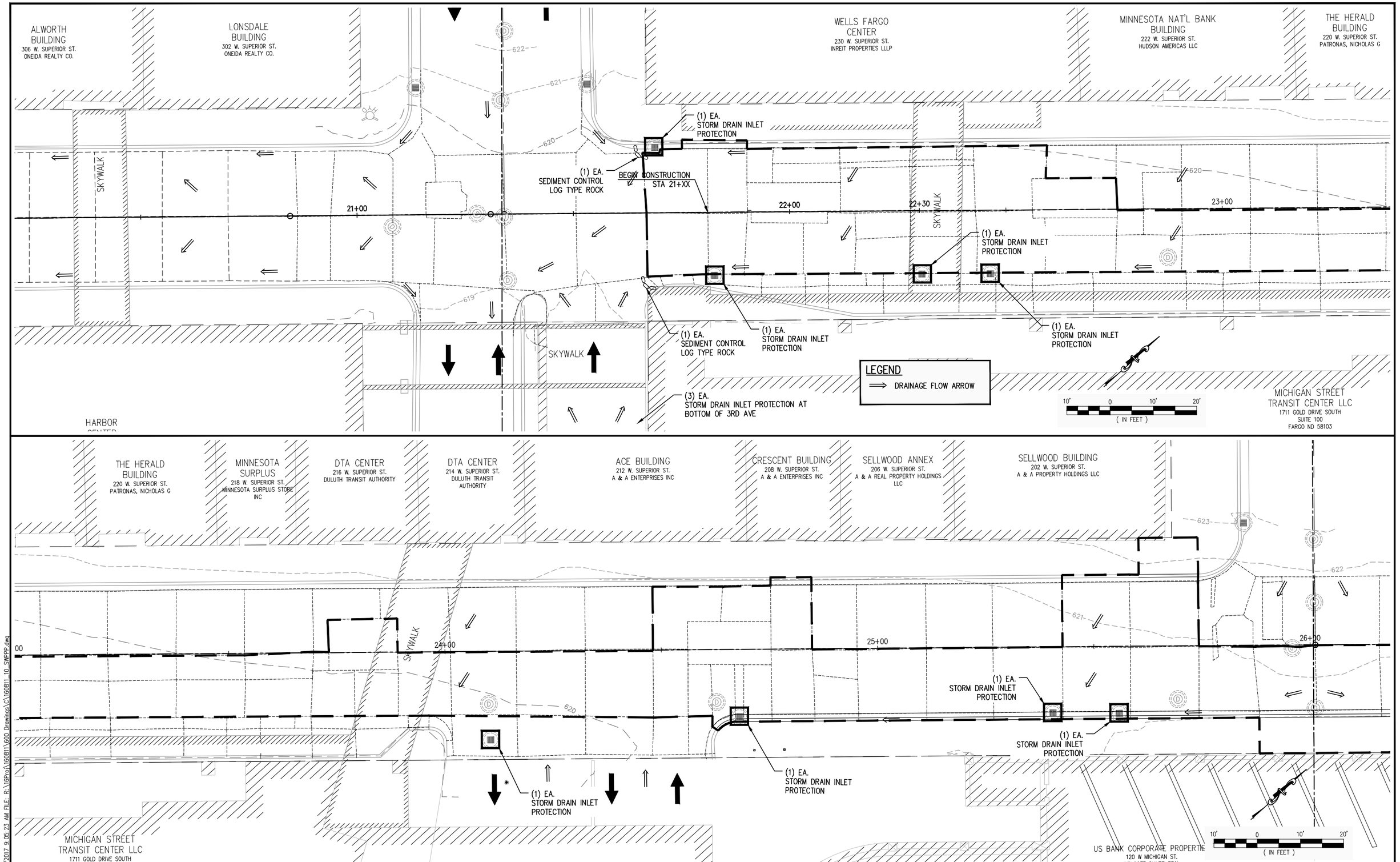

PLOT DATE: 2/24/2017 9:05:23 AM FILE: R:\16Proj\160811\600 Drawings\C\160811_10_SWPPP.dwg

I HEREBY CERTIFY that this plan, specification or report was prepared by me or under my direct supervision and that I am a duly Licensed Professional Engineer under the laws of the State of Minnesota.

BRAD SCOTT	Brad Scott	02-23-17	MICHIGAN ST. 3RD–1ST AVE WEST	CITY PROJECT NO. 1601	EROSION & SEDIMENT CONTROL PLAN
PRINTED NAME	SIGNATURE	DATE	LHB PROJECT NO. 160811		SHEET NO. 28 OF 49 SHEETS
		46198 LIC. NO.			

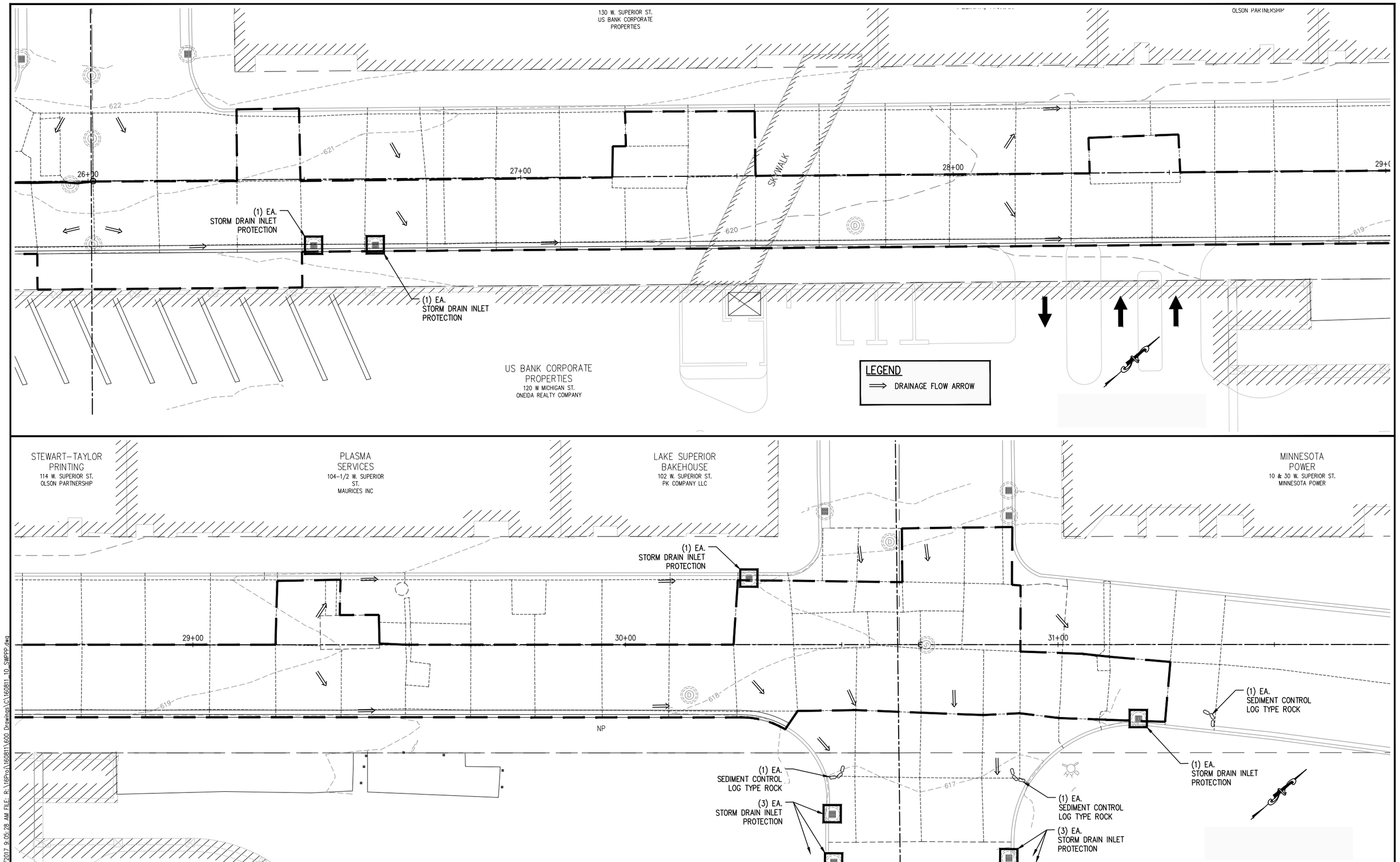

PLOT DATE: 2/24/2017 9:05:28 AM FILE: R:\16Proj\160811\600 Drawings\C\160811_10_SWPPP.dwg

I HEREBY CERTIFY that this plan, specification or report was prepared by me or under my direct supervision and that I am a duly Licensed Professional Engineer under the laws of the State of Minnesota.

BRAD SCOTT	Brad Scott	02-23-17	MICHIGAN ST. 3RD-1ST AVE WEST	CITY PROJECT NO. 1601	EROSION & SEDIMENT CONTROL PLAN
PRINTED NAME	SIGNATURE	DATE	LHB PROJECT NO. 160811		SHEET NO. 29 OF 49 SHEETS
		46198 LIC. NO.			

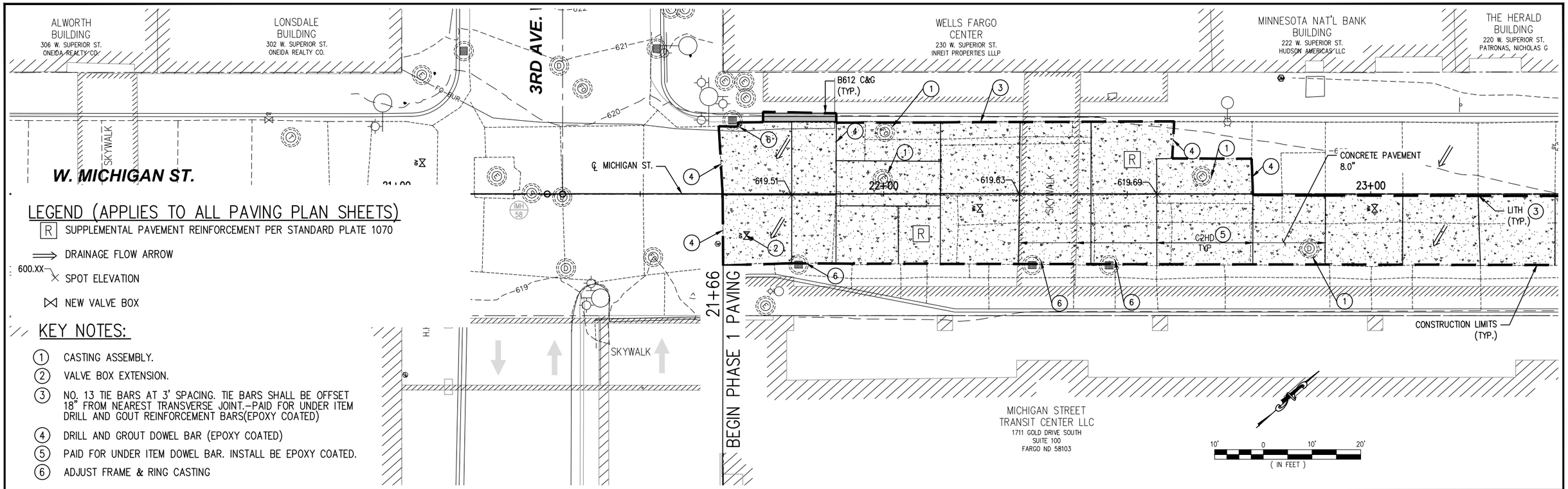

LEGEND (APPLIES TO ALL PAVING PLAN SHEETS)

- R — SUPPLEMENTAL PAVEMENT REINFORCEMENT PER STANDARD PLATE 1070
- DRAINAGE FLOW ARROW
- 600.XX — SPOT ELEVATION
- NEW VALVE BOX

KEY NOTES:

1. CASTING ASSEMBLY.
2. VALVE BOX EXTENSION.
3. NO. 13 TIE BARS AT 3' SPACING. TIE BARS SHALL BE OFFSET 18" FROM NEAREST TRANSVERSE JOINT.–PAID FOR UNDER ITEM DRILL AND GOUT REINFORCEMENT BARS(EPOXY COATED)
4. DRILL AND GROUT DOWEL BAR (EPOXY COATED)
5. PAID FOR UNDER ITEM DOWEL BAR. INSTALL BE EPOXY COATED.
6. ADJUST FRAME & RING CASTING

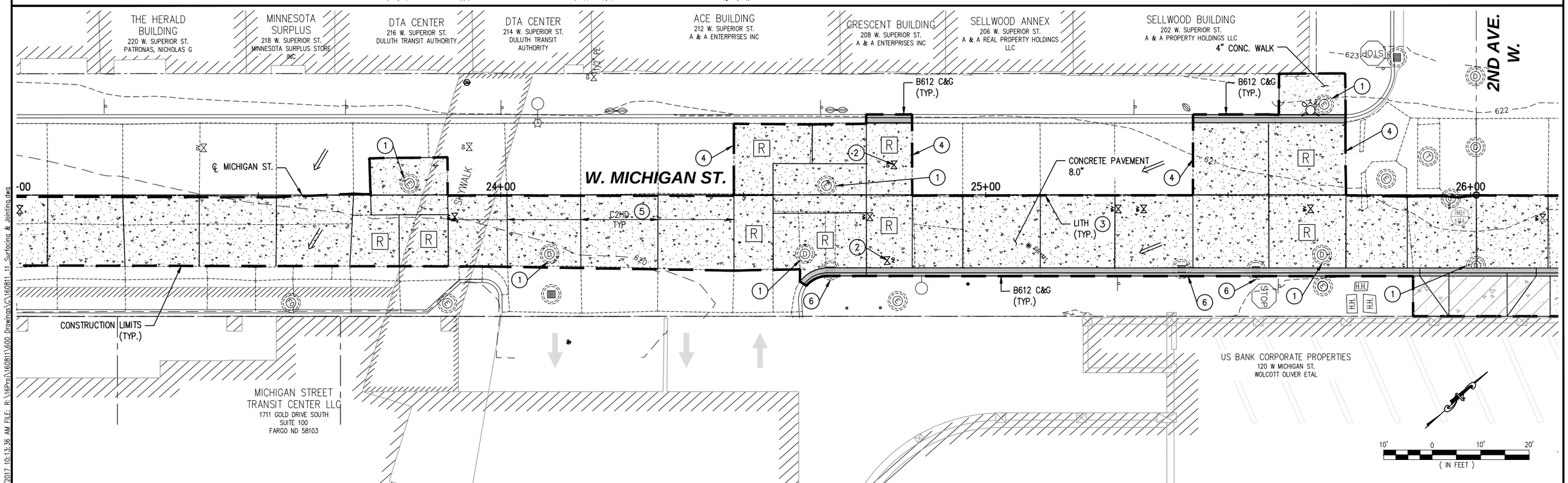

PLOT DATE: 2/24/2017 10:13:36 AM FILE: R:\16Proj\160811\600 Drawings\C\160811_11_Surfacing & Jointing.dwg

I HEREBY CERTIFY that this plan, specification or report was prepared by me or under my direct supervision and that I am a duly Licensed Professional Engineer under the laws of the State of Minnesota.	BRAD SCOTT PRINTED NAME	SIGNATURE	02-23-17 DATE 46198 LIC. NO.	MICHIGAN ST. 3RD–1ST AVE WEST LHB PROJECT NO. 160811	CITY PROJECT NO. 1601	CONCRETE PAVING PLAN SHEET NO. 30 OF 49 SHEETS

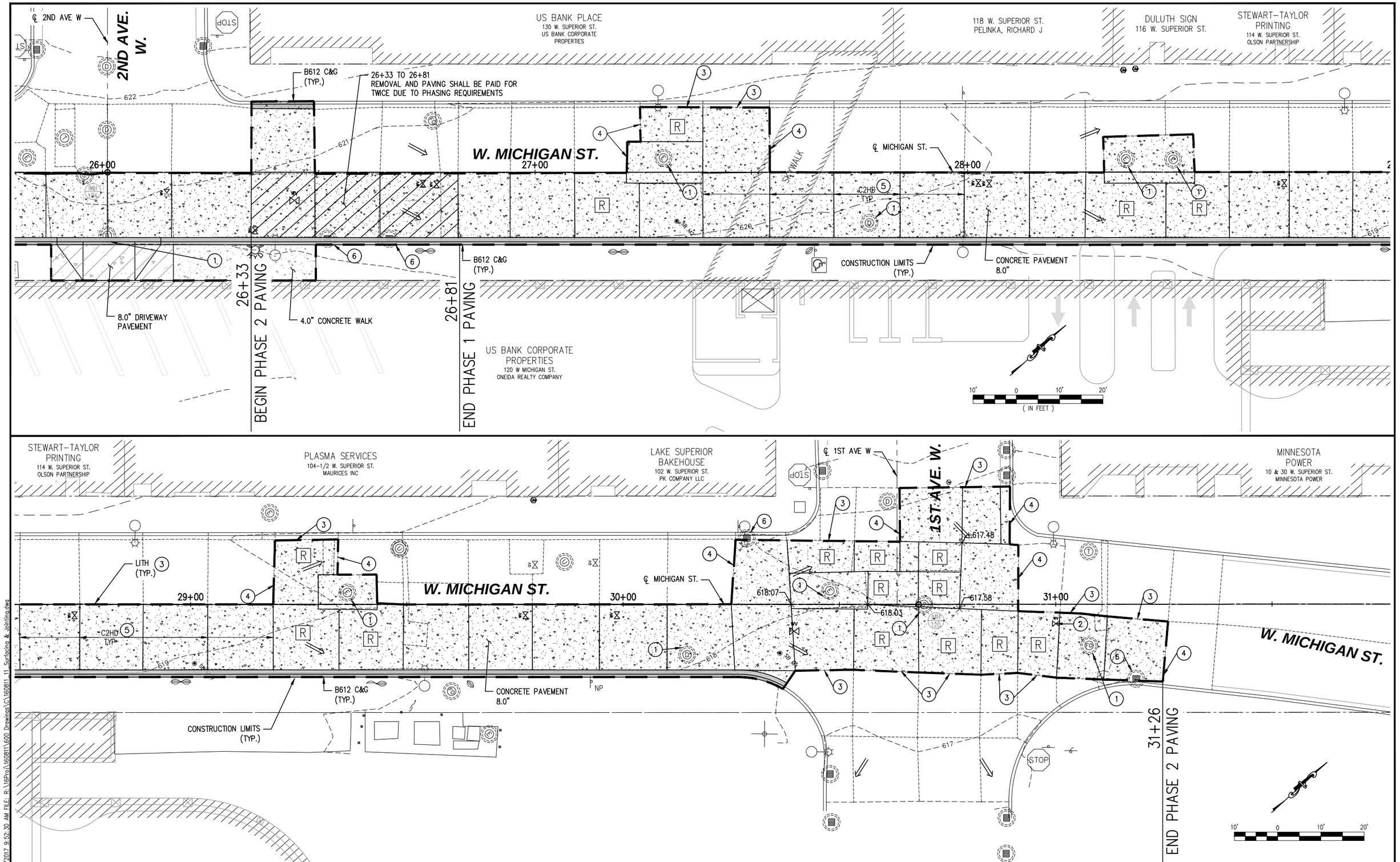

PLOT DATE: 2/24/2017 9:52:30 AM FILE: R:\16Proj\160811\600 Drawings\C\160811_11_Surfacing & Jointing.dwg

I HEREBY CERTIFY that this plan, specification or report was prepared by me or under my direct supervision and that I am a duly Licensed Professional Engineer under the laws of the State of Minnesota.

BRAD SCOTT	Brad Scott	02-23-17	MICHIGAN ST. 3RD–1ST AVE WEST	CITY PROJECT NO. 1601	CONCRETE PAVING PLAN
PRINTED NAME	SIGNATURE	DATE	LHB PROJECT NO. 160811		SHEET NO. 31 OF 49 SHEETS
		46198 LIC. NO.			

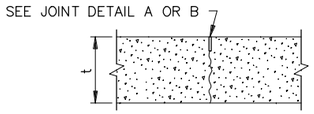

C1U & C2H

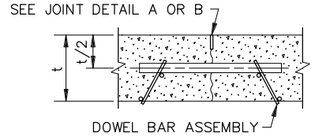

C1U–D & C2H–D

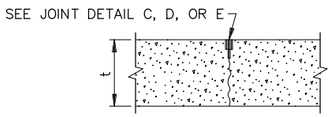

C3P, C4S, C5H

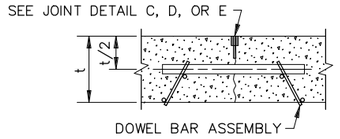

C3P–D, C4S–D, C5H–D

CONTRACTION JOINT REFERENCE, DETAIL & SEALER SPEC. TABLE

JOINT REFERENCE		JOINT DETAIL	JOINT SEALER SPEC.	JOINT WIDTH
WITHOUT DOWELS	WITH DOWELS			
C1U	C1U–D	A	UNSEALED	1/8"
C2H	C2H–D	B	3725	1/8"
C3P	C3P–D	C	3721	3/8"
C4S	C4S–D	D	3722	3/8"
C5H	C5H–D	E	3725	3/8"

LEGEND

C = CONTRACTION JOINT
NO. = JOINT REFERENCE
U = UNSEALED
H = HOT POURED
P = PREFORMED
S = SILICONE
–D = DOWEL BARS

EXAMPLE

C2H–D

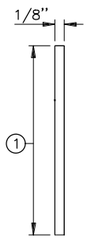

JOINT DETAIL A
SAWED & UNSEALED

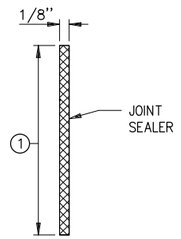

JOINT DETAIL B ③
SAWED & SEALED

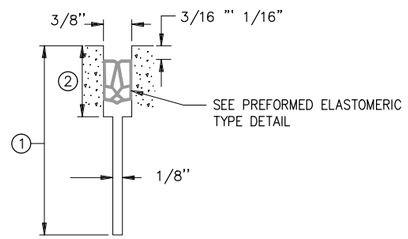

JOINT DETAIL C ③
SAWED AND SEALED

DOWEL BAR DIAMETER TABLE

PAVEMENT THICKNESS t	DOWEL BAR DIAMETER
LESS THAN 6"	NONE
6" – 6 1/2"	1"
7" – 10"	1 1/4"
10 1/2" – 14"	1 1/2"

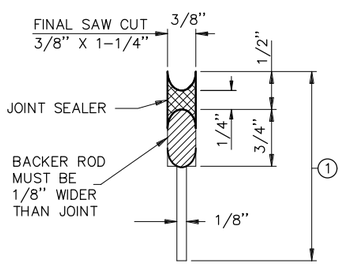

JOINT DETAIL D ③④
SAWED AND SEALED

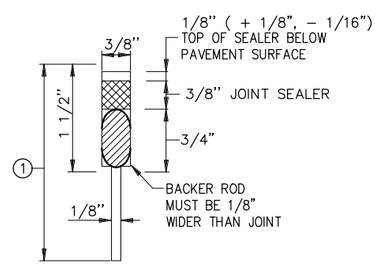

JOINT DETAIL E ③⑤
SAWED AND SEALED

REQUIRED DIMENSIONS

JOINT TYPE	TRANSVERSE
NOMINAL SEALER SIZE	11/16" USE IN ALL 3/8" JOINTS
a	0.69" + 0.13" – 0.05"
b	0.08" ± 0.02"
c	0.25" MIN.
d	0.63" MIN.

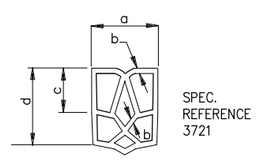

TYPICAL SHAPE FOR SATISFACTORY INSTALLATION IN JOINT (5 CELL MIN.)

PREFORMED ELASTOMERIC TYPE DETAIL

NOTES:

SEE STANDARD PLATE 1103 FOR DOWEL BAR ASSEMBLY.

SEE STANDARD PLATE 1150 FOR CONSTRUCTION OF HEADER JOINTS.

JOINT WIDTH TOLERANCE IS + 1/16" TO – 1/32"

FURNISH AND INSTALL ALL JOINT SEALER IN ACCORDANCE WITH THE MANUFACTURER'S RECOMMENDATIONS.

SEE STANDARD PLANS 5–297.217 AND 5–297.219, FOR CONCRETE MAINLINE/RAMP PAVEMENT.

SEE PAVING LAYOUTS IN THE PLANS FOR JOINT CLASS DESIGNATION TO BE USED AND SPECIAL REINFORCEMENT REQUIRED.

① JOINT DEPTH SHALL BE:
FOR CONCRETE OVERLAYS – 1/3 THE PAVEMENT THICKNESS
FOR CONCRETE PAVEMENT – 1/4 THE PAVEMENT THICKNESS

② SEE CONTRACTION JOINT SEALER DETAIL. WHEN USING PREFORMED JOINT SEALER, THE DEPTH SHALL BE 1/4" MORE THAN THE PREFORMED SEALER, WHEN COMPRESSED, TO FIT THE JOINT DESIGN WIDTH. "a" DIMENSION SHALL APPLY AT ANY POINT THROUGHOUT "c" DEPTH. SHARP INTERNAL CORNERS WILL NOT BE PERMITTED. ALL CORNERS SHALL BE PROVIDED WITH SUITABLE FILLET.

③ WHEN SEALING, THE JOINT FACES SHALL BE CLEANED AND DRIED BY SANDBLASTING AND AIR BLASTING.

④ PRIOR TO SEALING THE JOINT, A 1/2" DIA. CLOSED CELL BACKER ROD SHALL BE PLACED SUCH THAT THE TOP OF THE BACKER ROD IS 1/2"BELOW THE SURFACE OF THE PAVEMENT. NON SELF–LEVELING SILICONE SHALL BE TOOLED INTO THE JOINT MAINTAINING A SEAL AND BEAD THICKNESS OF 1/4".

⑤ PRIOR TO SEALING THE JOINT, A 1/2" DIA. CLOSED CELL BACKER ROD CAPABLE OF WITHSTANDING SEALANT TEMPERATURES OF 400 DEGREES F. SHALL BE PLACED 1/2" BELOW THE TOP OF PAVEMENT.

CONTRACTION JOINTS
DESIGN C

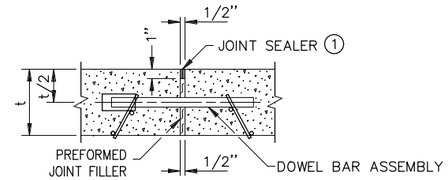

E1H–D (W/DOWELS) E1H (W/O DOWELS)

JOINT DETAIL A

EXPANSION JOINT REFERENCE, DETAIL & SEALER SPEC. TABLE

JOINT REFERENCE		JOINT DETAIL	JOINT SEALER SPEC.	JOINT WIDTH
WITHOUT DOWELS	WITH DOWELS			
E1H	E1H–D	A	3725	1/2"
E2H	E2H–D	B	3725	1"
E4H		C	3725	2"
	E4H–D	D	3725	2"
E8H		STANDARD PLAN 5–297.229	3725	4"

LEGEND

E = EXPANSION JOINT
NO. = JOINT REFERENCE
H = HOT POURED
–D = DOWEL BARS

EXAMPLE

E4H–D

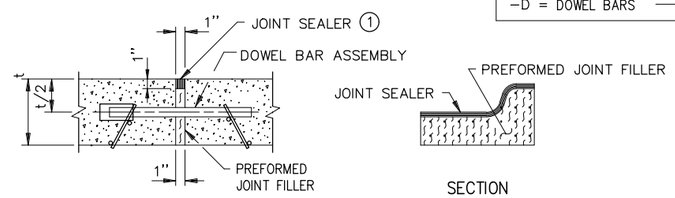

E2H–D (W/DOWELS) E2H (W/O DOWELS)

SECTION THRU CURB

JOINT DETAIL B

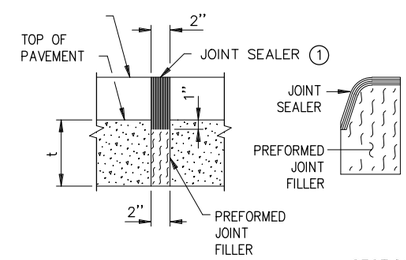

E4H (W/O DOWELS)

SECTION THRU CURB

JOINT DETAIL C

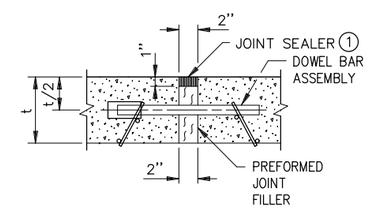

E4H–D (W/DOWELS)

JOINT DETAIL D

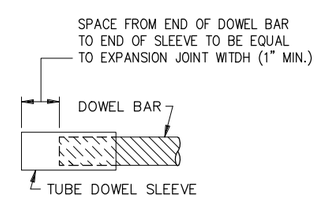

DOWEL BAR SLEEVE DETAIL

NOTES:

PREFORMED JOINT FILLER MATERIAL, SPEC. 3702.

FOR DOWEL BAR ASSEMBLY, SEE STANDARD PLATE 1103.

① JOINT SEALER SPEC. 3725. THE JOINT FACES SHALL BE CLEANED AND DRIED BY SANDBLASTING AND AIR BLASTING. TOP OF SEALER, FLUSH TO 1/8" BELOW TOP OF PAVEMENT SURFACE. MAKE TOP OF SEALER FOR CURB SECTION D JOINTS FLUSH WITH SURFACE '1/8".

EXPANSION JOINTS
DESIGN E

PLOT DATE: 2/24/2017 9:06:15 AM FILE: R:\16Proj\160811\600 Drawings\C\160811_12.1_Construction Details.dwg

I HEREBY CERTIFY that this plan, specification or report was prepared by me or under my direct supervision and that I am a duly Licensed Professional Engineer under the laws of the State of Minnesota.

BRAD SCOTT
PRINTED NAME

SIGNATURE

02-23-17
DATE

46198
LIC. NO.

MICHIGAN ST. 3RD–1ST AVE WEST

LHB PROJECT NO. 160811

CITY PROJECT NO. 1601

CONSTRUCTION DETAILS

SHEET NO. 32 OF 49 SHEETS

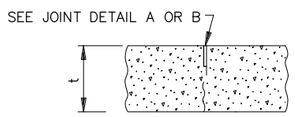

L1U & L1H ①

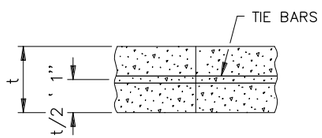

L2TU ②

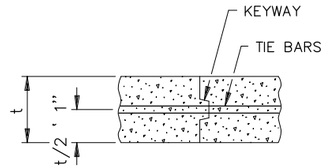

L2KTU ③

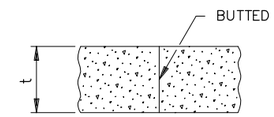

L3U

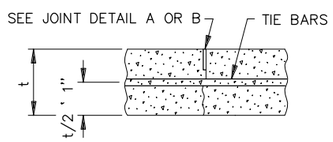

L1TU & L1TH ①

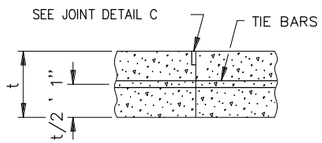

L2TH ②

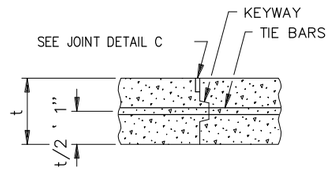

L2KTH ③

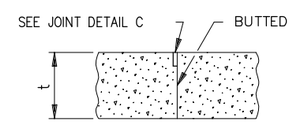

L3H

TIEBAR TABLE

PAVEMENT THICKNESS	TIEBAR SIZE	LENGTH
<10–1/2"	NO. 13	30"
≥10–1/2"	NO. 16	36"
ALL THICKNESS WHEN TYING TO CURB AND GUTTER	NO. 13	30"

ALL REBARS ARE IN METRIC DESIGNATIONS

THE TIE BAR SPACING FOR ALL L2T AND L2KT JOINTS SHALL BE 3'–0" CENTER TO CENTER AND BENT 60^ AS SHOWN, EXCEPT WHEN NOTED OTHERWISE IN THE PLANS.

TIE BARS IN THE L2T AND L2KT JOINTS SHALL BE THE SAME SIZE AND LENGTH AS USED FOR THE L1T JOINTS, WHEN TYING PAVEMENT TO PAVEMENT. TIE BARS IN THE L2KT JOINTS SHALL BE NO. 13 X 2' – 6", WHEN TYING CURB & GUTTER TO PAVEMENT.

ALL TIE BARS SHALL BE EPOXY COATED AND COMPLY WITH SPEC. 3301.

LONGITUDINAL JOINT REFERENCE, DETAIL & SEALER SPECIFICATION TABLE

JOINT REFERENCE			JOINT DETAIL	JOINT SEALER SPEC	JOINT WIDTH
WITHOUT TIE BARS	WITH TIE BARS	WITH KEYWAY & TIE BARS			
L1U	L1TU		A	UNSEALED	1/8"
L1H	L1TH		B	3725	1/8"
	L2TU	L2KTU	NONE	UNSEALED	
	L2TH	L2KTH	C	3725	3/8"
L3U			NONE	UNSEALED	
L3H			C	3725	3/8"

LEGEND

L = LONGITUDINAL JOINT
NO. = JOINT REFERENCE
1 = PAVED CONSTRUCTION JOINT
2 = TIED/KEYED CONSTRUCTION JOINT
3 = BUTTED CONSTRUCTION JOINT
K = KEYWAY
T = TIE BARS
U = UNSEALED
H = HOT POURED

EXAMPLE

L2KTH

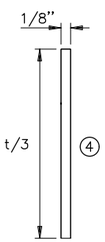

JOINT DETAIL A
SAWED & UNSEALED

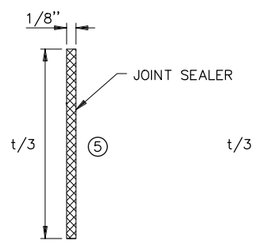

JOINT DETAIL B
SAWED & SEALED

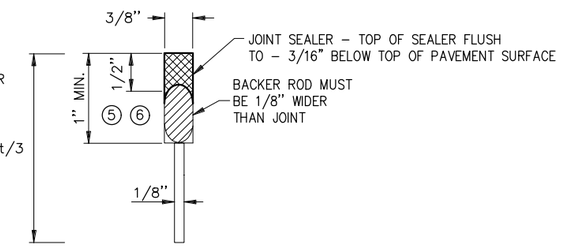

JOINT DETAIL C
SAWED & SEALED

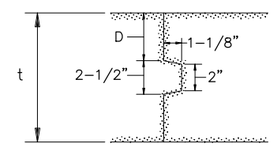

PAVEMENT KEYWAY DETAIL

KEYWAY DIMENSION TABLE

t PAVEMENT THICKNESS	D (TOLERANCE ' 1/4")
< 7"	NO KEYWAY
7"TO 7–1/2"	3"
8"TO 10"	4"
≥ 10–1/2"	5"

KEYWAY (1–1/8" x 2" x 2–1/2") MAY BE FORMED WITH MOLD OR METAL FORM. OTHER APPROVED KEYWAY SHAPES GIVING EQUIVALENT CONSTRUCTION FEATURES MAY BE USED WITH APPROVAL OF THE ENGINEER.

NOTES:

NORMALLY, TIED PAVEMENT WIDTHS SHALL NOT EXCEED FOUR LANES, EXCEPT BRIDGE APPROACH PANELS AND PAVEMENT TAPERS.

JOINT WIDTH TOLERANCE IS + 1/16 IN. TO – 1/32 IN.

FURNISH AND INSTALL ALL JOINT SEALER IN ACCORDANCE WITH THE MANUFACTURER'S RECOMMENDATIONS.

TIED/KEYED AND BUTTED CONSTRUCTION JOINTS SHALL BE UNSEALED EXCEPT AS OTHERWISE NOTED IN THE PLAN OR REQUIRED BY THE ENGINEER.

SEE STANDARD PLANS 5–297.217 AND 5–297.219 FOR CONCRETE MAINLINE AND RAMP PAVEMENT.

SEE PAVING LAYOUTS IN THE PLANS FOR JOINT CLASS DESIGNATIONS TO BE USED AND SPECIAL REINFORCEMENT REQUIRED.

WHEN CURB AND GUTTER IS PLACED ADJACENT TO CONCRETE MAINLINE, THE TIEBARS SHALL BE PLACED A MINIMUM OF 2" ABOVE THE CURB AND GUTTER GRADE.

① SEE THE LONGITUDINAL JOINT REFERENCE, DETAIL & SEALER SPECIFICATION TABLE TO DETERMINE JOINT DETAIL.

② CONCRETE PAVEMENTS LESS THAN 7" SHALL USE L2TU AND L2TH JOINTS UNLESS OTHERWISE ALLOWED BY THE ENGINEER.

③ CONCRETE PAVEMENTS GREATER THAN OR EQUAL TO 7" SHALL USE L2KTU AND L2KTH JOINTS UNLESS OTHERWISE ALLOWED BY THE ENGINEER.

④ THE JOINT FACES SHALL BE CLEANED WITH WATER DURING THE SAW CUTTING OPERATION OR BY WATER BLASTING AFTER SAWING.

⑤ THE JOINT FACES SHALL BE CLEANED AND DRIED BY SANDBLASTING AND AIR BLASTING.

⑥ PRIOR TO SEALING THE JOINT, A 1/2" DIAMETER CLOSED CELL BACKER ROD CAPABLE OF WITHSTANDING SEALANT TEMPERATURES OF 400 DEGREES F. SHALL BE PLACED 1/2" BELOW THE TOP OF THE PAVEMENT.

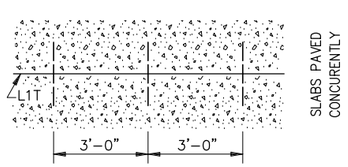

L1T PAVING DETAIL

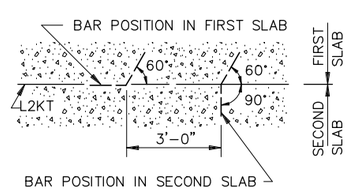

L2T & L2KT TIE BAR BENDING AND PAVING DETAIL

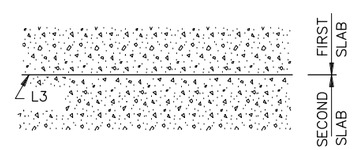

L3 PAVING DETAIL

PLOT DATE: 2/24/2017 9:06:17 AM FILE: R:\16Proj\160811\600 Drawings\C\160811_12.1_Construction Details.dwg

I HEREBY CERTIFY that this plan, specification or report was prepared by me or under my direct supervision and that I am a duly Licensed Professional Engineer under the laws of the State of Minnesota.

BRAD SCOTT
PRINTED NAME

SIGNATURE

02-23-17
DATE

46198
LIC. NO.

MICHIGAN ST. 3RD–1ST AVE WEST

LHB PROJECT NO. 160811

CITY PROJECT NO. 1601

CONSTRUCTION DETAILS

SHEET NO. 33 OF 49 SHEETS

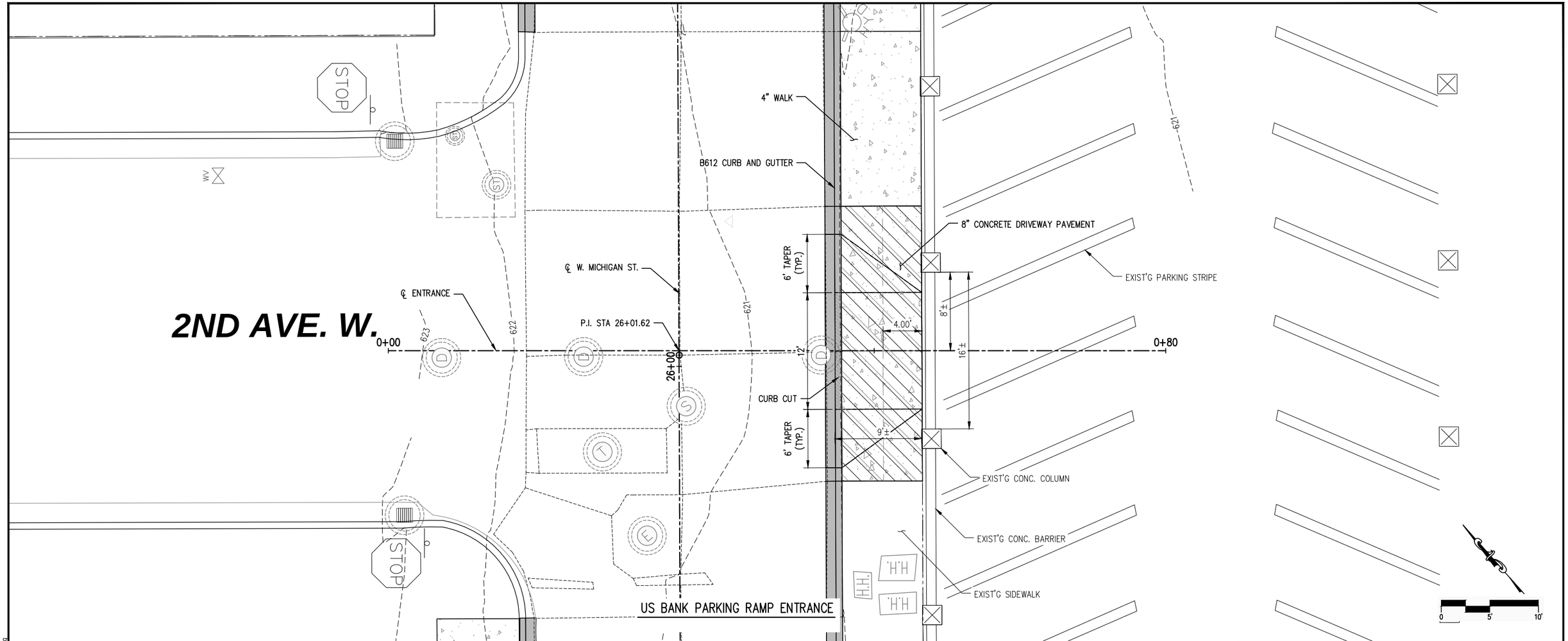

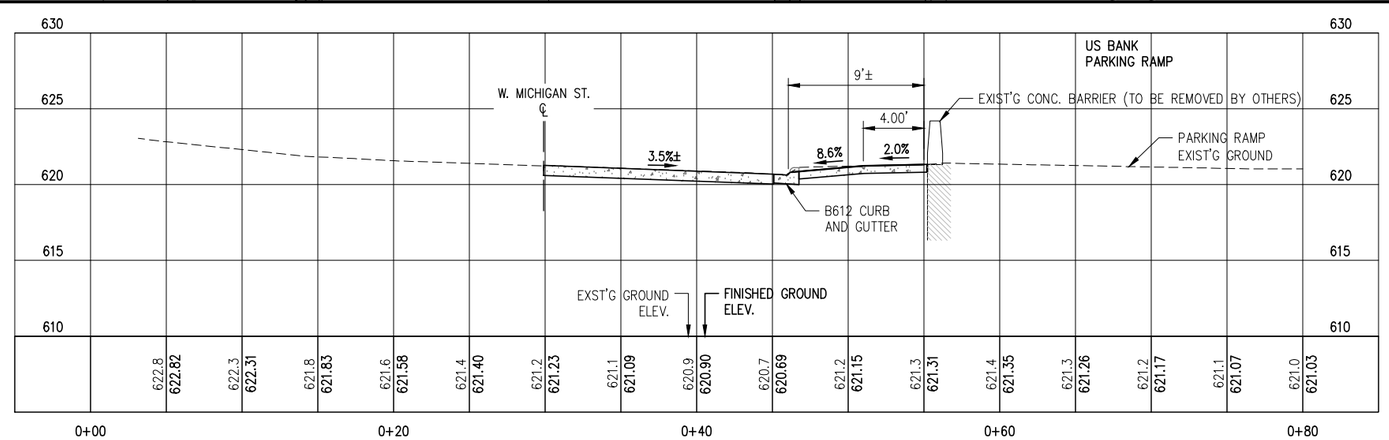

US BANK PARKING RAMP ENTRANCE PROFILE

I HEREBY CERTIFY that this plan, specification or report was prepared by me or under my direct supervision and that I am a duly Licensed Professional Engineer under the laws of the State of Minnesota.	BRAD SCOTT PRINTED NAME	SIGNATURE	02-23-17 DATE 46198 LIC. NO.	MICHIGAN ST. 3RD–1ST AVE WEST LHB PROJECT NO. 160811	CITY PROJECT NO. 1601	U.S. BANK – ENTRANCE PROFILE CONSTRUCTION DETAILS SHEET NO. 34 OF 49 SHEETS

PLOT DATE: 2/24/2017 9:06:59 AM FILE: R:\16Pro\160811\600 Drawings\C\160811_12.2_Construction Details_US Bank.dwg

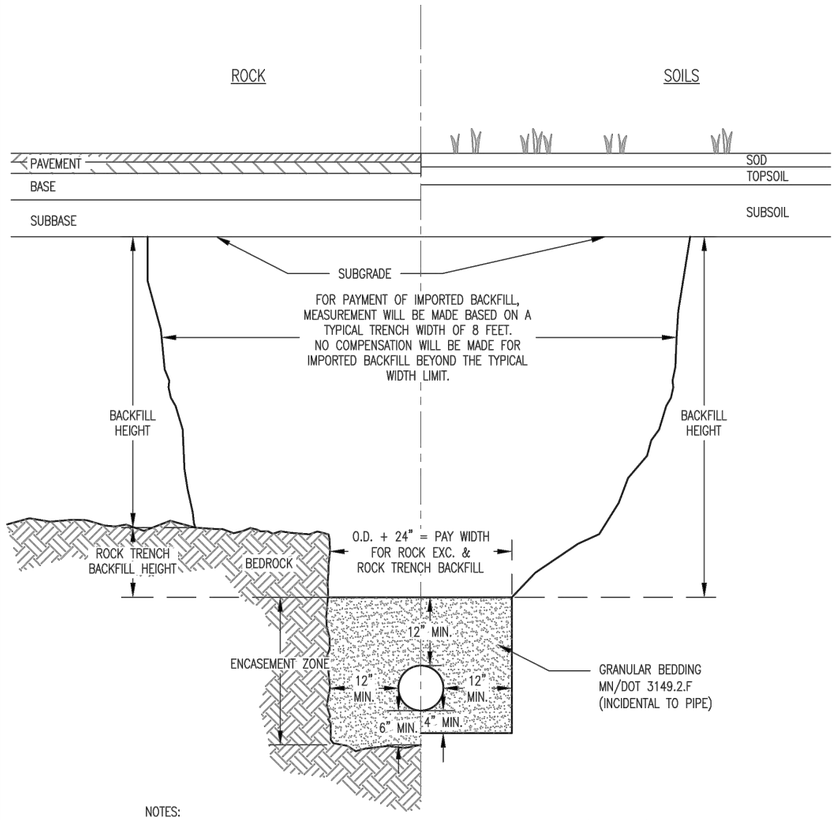

NOTES:

1. EXCESS EXCAVATION MATERIAL SHALL BE DISPOSED OF OFF PROJECT R.O.W. (INCIDENTAL)
2. PAY WIDTH FOR ROCK EXCAVATION SHALL BE BASED ON OUTSIDE DIAMETER OF PIPE PLUS 24".
3. A MINIMUM OF 1 CUBIC YARD OF STRUCTURE EXCAVATION, CLASS R, WILL BE PAID FOR EVERY 10' OF PIPE WHERE ROCK REMOVAL IS REQUIRED.
4. TRENCH STABILIZATION BEDDING MATERIAL MAY BE USED IN AREAS AS DETERMINED BY THE ENGINEER.
5. ENCASEMENT ZONE MATERIAL SHALL BE COMPACTED TO 95% OF MAXIMUM STANDARD PROCTOR DENSITY.
6. BACKFILL SHALL BE SELECT GRADING MATERIAL FOUND ON-SITE WHEN DEEMED SUITABLE BY THE ENGINEER OR AS OTHERWISE DEFINED IN THE PROJECT SPECIAL PROVISIONS. WHEN ON-SITE MATERIAL IS NOT SUITABLE AND WHEN BACKFILL MATERIAL IS NOT SPECIFIED, IMPORTED MATERIAL MEETING MN/DOT 3149.2.D.1 GRANULAR BACKFILL SHALL BE PROVIDED. USE OF NATIVE ON-SITE MATERIAL IS INCIDENTAL.
7. COMPACT BACKFILL MATERIALS TO 100% OF MAXIMUM STANDARD PROCTOR DENSITY FOR THE UPPER 3' BELOW THE SUBGRADE, AND TO 95% OF MAXIMUM STANDARD PROCTOR DENSITY BELOW THE UPPER 3'.

DUCTILE IRON, PE WATERMAIN, PRESSURE SEWER, & FORCEMAIN BEDDING		EX-1
REVISED/APPROVED 01/20/2017	CITY OF DULUTH STANDARD DETAIL DEPT. OF PUBLIC WORKS AND UTILITIES	NO SCALE

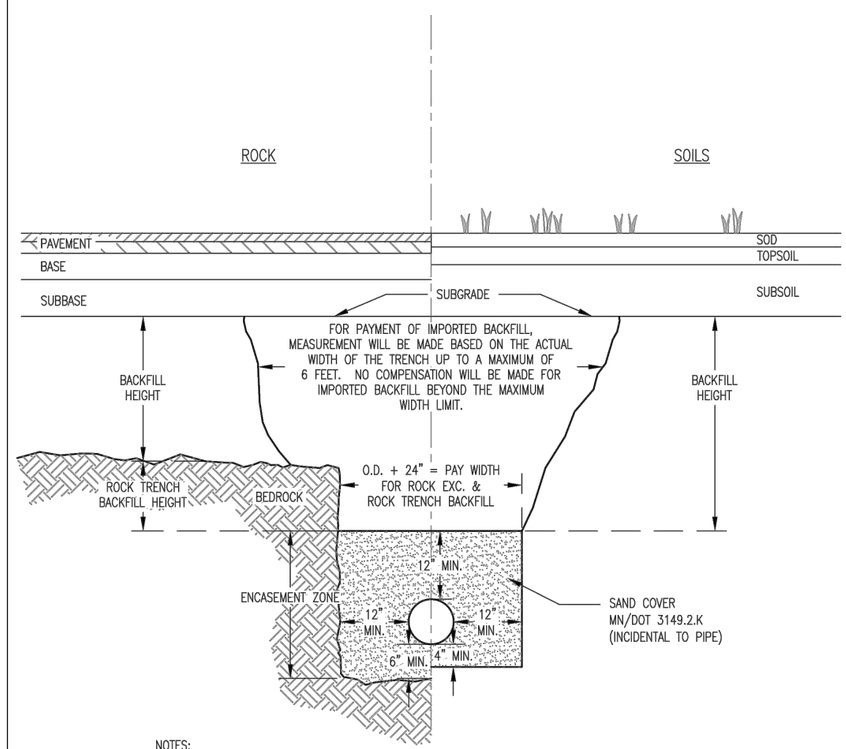

NOTES:

1. EXCESS EXCAVATION MATERIAL SHALL BE DISPOSED OF OFF PROJECT R.O.W. (INCIDENTAL)
2. PAY WIDTH FOR ROCK EXCAVATION SHALL BE BASED ON OUTSIDE DIAMETER OF PIPE PLUS 24".
3. A MINIMUM OF 1 CUBIC YARD OF STRUCTURE EXCAVATION, CLASS R, WILL BE PAID FOR EVERY 10' OF PIPE WHERE ROCK REMOVAL IS REQUIRED.
4. TRENCH STABILIZATION BEDDING MATERIAL MAY BE USED IN AREAS AS DETERMINED BY THE ENGINEER.
5. ENCASEMENT ZONE MATERIAL SHALL BE COMPACTED TO 95% OF MAXIMUM STANDARD PROCTOR DENSITY.
6. BACKFILL SHALL BE SELECT GRADING MATERIAL FOUND ON-SITE WHEN DEEMED SUITABLE BY THE ENGINEER OR AS OTHERWISE DEFINED IN THE PROJECT SPECIAL PROVISIONS. WHEN ON-SITE MATERIAL IS NOT SUITABLE AND WHEN BACKFILL MATERIAL IS NOT SPECIFIED, IMPORTED MATERIAL MEETING MN/DOT 3149.2.D.1 GRANULAR BACKFILL SHALL BE PROVIDED. USE OF NATIVE ON-SITE MATERIAL IS INCIDENTAL.
7. COMPACT BACKFILL MATERIALS TO 100% OF MAXIMUM STANDARD PROCTOR DENSITY FOR THE UPPER 3' BELOW THE SUBGRADE, AND TO 95% OF MAXIMUM STANDARD PROCTOR DENSITY BELOW THE UPPER 3'.

ALL STEEL & 4" AND LARGER PE GAS MAIN BEDDING DETAIL		EX-2
REVISED/APPROVED 01/20/2017	CITY OF DULUTH STANDARD DETAIL DEPT. OF PUBLIC WORKS AND UTILITIES	NO SCALE

PLOT DATE: 2/24/2017 9:07:15 AM FILE: R:\16Pro\160811\600 Drawings\C\160811_12.3_Construction Details.dwg

I HEREBY CERTIFY that this plan, specification or report was prepared by me or under my direct supervision and that I am a duly Licensed Professional Engineer under the laws of the State of Minnesota.

BRAD SCOTT
PRINTED NAME

SIGNATURE

02-23-17
DATE

46198
LIC. NO.

MICHIGAN ST. 3RD-1ST AVE WEST

LHB PROJECT NO. 160811

CITY PROJECT NO. 1601

CONSTRUCTION DETAILS

WGT. 298 LBS		MATERIAL: GRAY IRON CLASS 35B
WGT. 122 LBS	TOTAL WEIGHT 420 LBS.	SPEC.: ASTM A-48-74

NOTE: SUITABLE FOR HS25 WHEEL LOADS

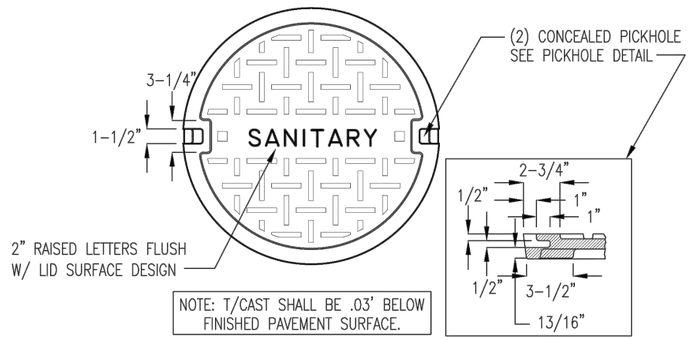

NOTE: T/CAST SHALL BE .03' BELOW FINISHED PAVEMENT SURFACE.

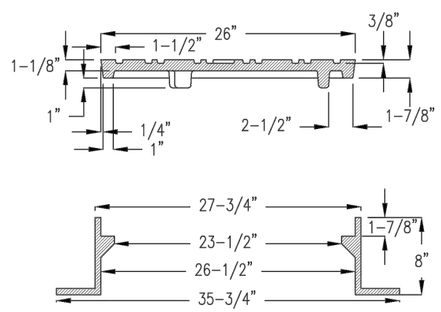

SANITARY CASTING DETAIL		SAN-1
REVISED/APPROVED 2/01/2013	CITY OF DULUTH STANDARD DETAIL DEPT. OF PUBLIC WORKS AND UTILITIES	NO SCALE

WGT. 298 LBS		MATL. GRAY IRON CLASS 35B
WGT. 122 LBS	TOT.WGT. 420 LBS.	SPEC. ASTM A-48-74

NOTE: SUITABLE FOR HS25 WHEEL LOADS

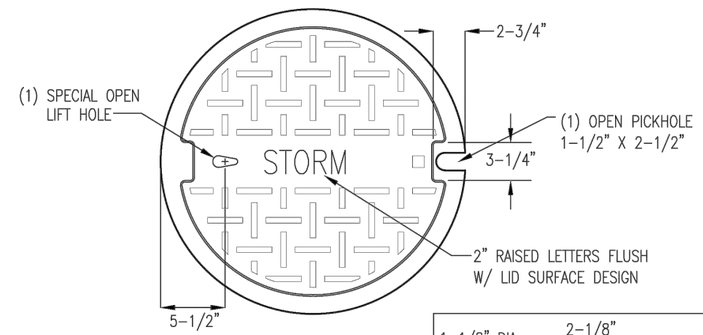

NOTE: T/CAST SHALL BE .03' BELOW FINISHED PAVEMENT SURFACE.

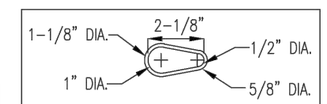

DETAIL OF SPECIAL LIFT HOLE

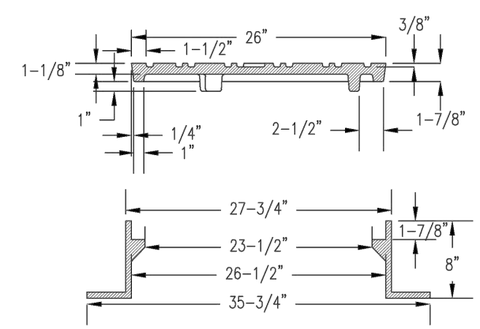

STORM MANHOLE CASTING		STRM-1
REVIEWED/APPROVED 2/01/2013	CITY OF DULUTH STANDARD DETAIL DEPT. OF PUBLIC WORKS AND UTILITIES	NO SCALE

PLOT DATE: 2/24/2017 9:07:17 AM FILE: R:\16Proj\160811\600 Drawings\C\160811_12.3_Construction Details.dwg

I HEREBY CERTIFY that this plan, specification or report was prepared by me or under my direct supervision and that I am a duly Licensed Professional Engineer under the laws of the State of Minnesota.	BRAD SCOTT PRINTED NAME	SIGNATURE	02-23-17 DATE 46198 LIC. NO.	MICHIGAN ST. 3RD-1ST AVE WEST LHB PROJECT NO. 160811	CITY PROJECT NO. 1601	CONSTRUCTION DETAILS SHEET NO. 36 OF 49 SHEETS

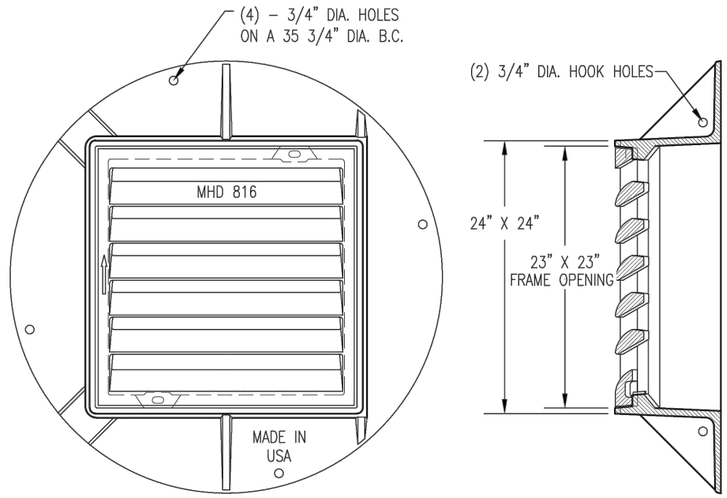

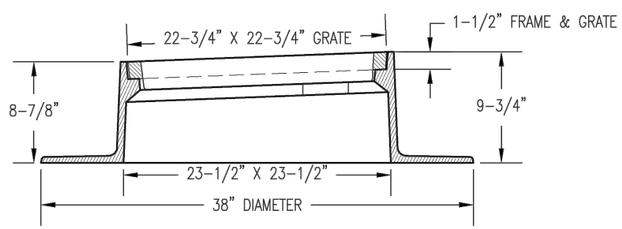

NOTES:

1. COMPONENT NO'S: FRAME 5005, GRATE 816 (STD PLATE 4154B).
2. MATERIAL: CAST GRAY IRON ASTM A-48, CLASS 35B
3. WEIGHT: FRAME 262#; GRATE 131#
4. ALL GUTTERS UPSTREAM OF CATCH BASINS SHALL BE STAMPED, "NO DUMPING, LEADS TO LAKE" WITH A CITY SUPPLIED STAMP.

CATCH BASIN CASTINGS		STRM-3
REVIEWED/APPROVED 1/8/2016	CITY OF DULUTH STANDARD DETAIL DEPT. OF PUBLIC WORKS AND UTILITIES	NO SCALE

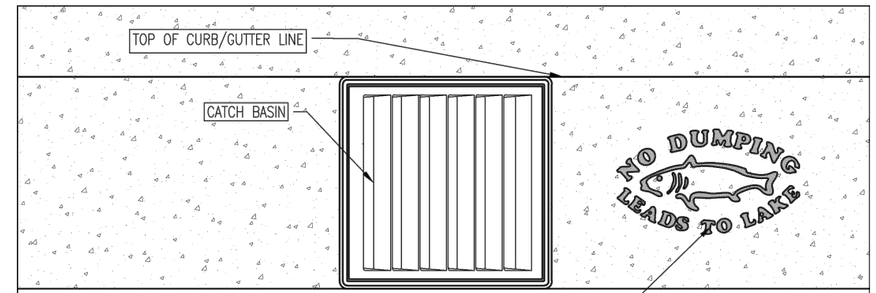

GUTTER STAMP TO BE PLACED A MAXIMUM OF 18" FROM CATCH BASIN GRATE ON UPHILL SIDE AND CENTERED IN GUTTER.

GUTTER STAMP TO BE OBTAINED FROM CITY OF DULUTH BY CONTRACTOR.

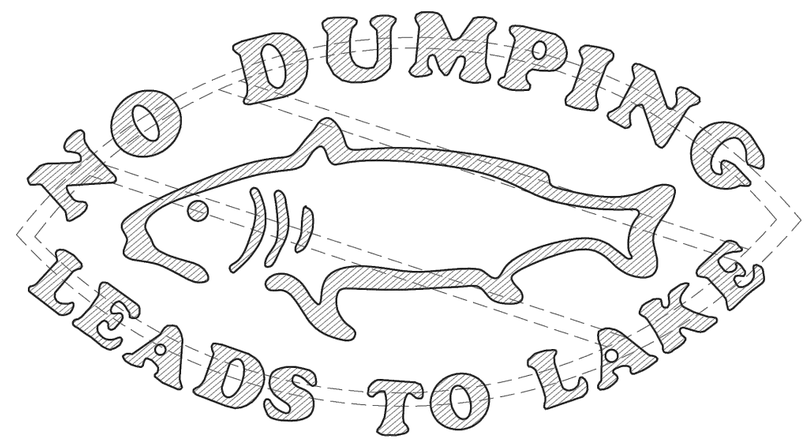

GUTTER STAMP		STRM-7
REVIEWED/APPROVED 2/01/2013	CITY OF DULUTH STANDARD DETAIL DEPT. OF PUBLIC WORKS AND UTILITIES	NO SCALE

PLOT DATE: 2/24/2017 9:07:22 AM FILE: R:\16Proj\160811\600 Drawings\C\160811_12.3_Construction Details.dwg

I HEREBY CERTIFY that this plan, specification or report was prepared by me or under my direct supervision and that I am a duly Licensed Professional Engineer under the laws of the State of Minnesota.	BRAD SCOTT PRINTED NAME	SIGNATURE	02-23-17 DATE 46198 LIC. NO.	MICHIGAN ST. 3RD-1ST AVE WEST LHB PROJECT NO. 160811	CITY PROJECT NO. 1601	CONSTRUCTION DETAILS SHEET NO. 37 OF 49 SHEETS

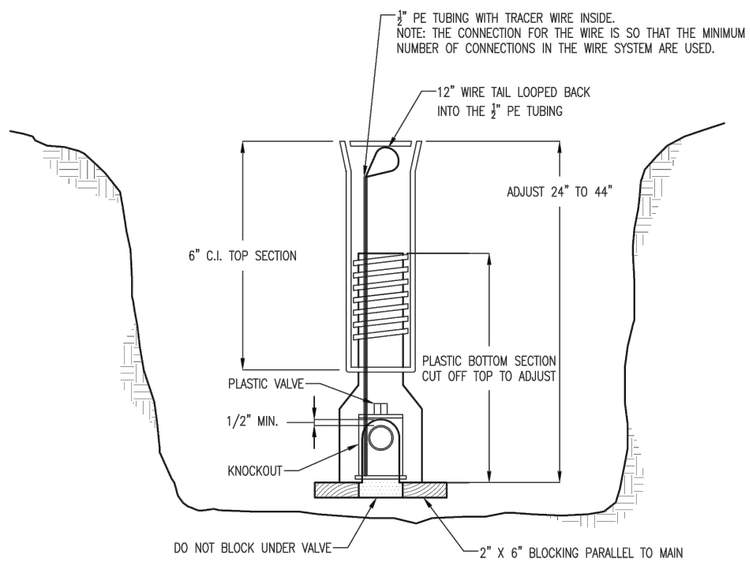

PE VALVE BOX SETTING		G-5
REVISED/APPROVED 2/01/2013	CITY OF DULUTH STANDARD DETAIL DEPT. OF PUBLIC WORKS AND UTILITIES	NO SCALE

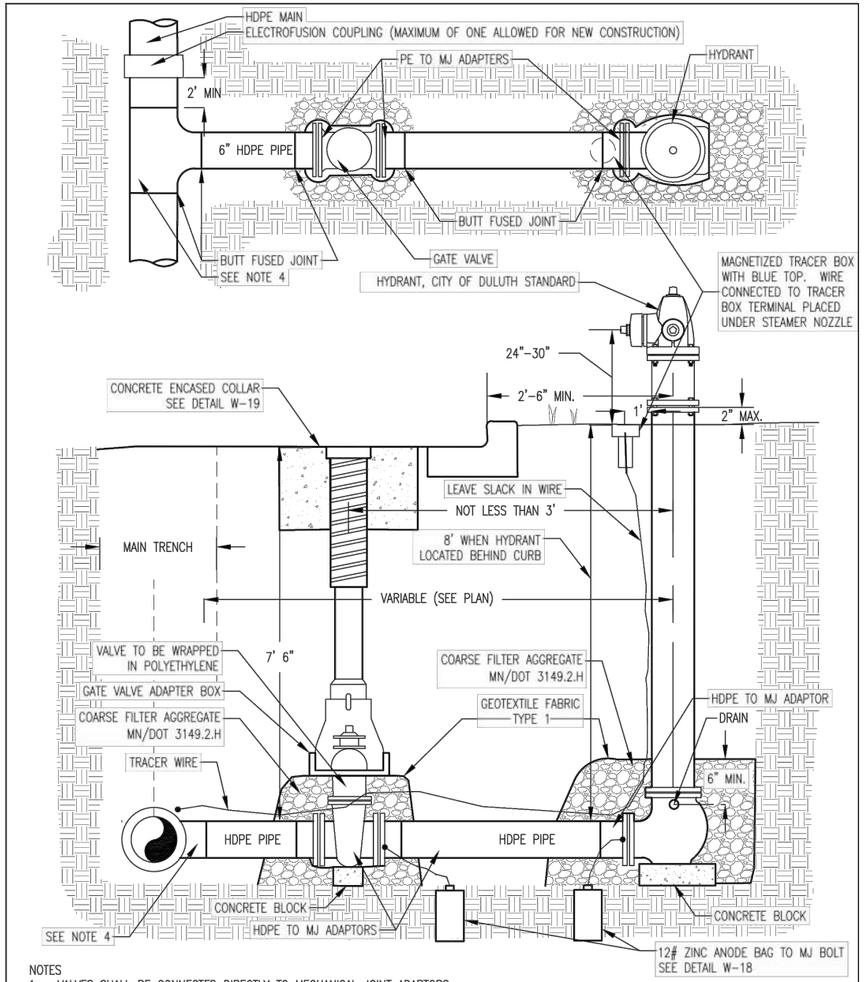

NOTES
1. VALVES SHALL BE CONNECTED DIRECTLY TO MECHANICAL JOINT ADAPTORS.
2. USE EPOXY COATING ON VALVE AND HYDRANT BASE
3. ALL BOLTS SHALL BE COR-TEN WITH 6 OUNCE ZINC ANODE CAPS CONFORMING TO ASTM B-418 FOR ALL MECHANICAL JOINT FITTINGS.
4. FOR 8" MAINS, CONTRACTOR SHALL USE AN 8 X 8 TEE WITH A MACHINED 8 X 6 REDUCER OR AN 8 X 6 ELECTROFUSION BRANCH SADDLE. FOR LARGER DIMENSION MAINS A FABRICATED TEE WITH A 6" BRANCH OUTLET MAY BE USED.
5. GATE VALVES WITH HDPE STUBS MAY BE USED IN LIEU OF MJ VALVES. ANODES SHALL BE CONNECTED DIRECTLY TO THE VALVE BONNET BOLTS.

FIRE HYDRANT SETTING DETAIL – HDPE		W-4A
REVISED/APPROVED 02/07/2017	CITY OF DULUTH STANDARD DETAIL DEPT. OF PUBLIC WORKS AND UTILITIES	NO SCALE

PLOT DATE: 2/24/2017 9:07:27 AM FILE: R:\16Pro\160811\600 Drawings\C\160811_12.3_Construction Details.dwg

I HEREBY CERTIFY that this plan, specification or report was prepared by me or under my direct supervision and that I am a duly Licensed Professional Engineer under the laws of the State of Minnesota.	BRAD SCOTT PRINTED NAME	SIGNATURE	02-23-17 DATE 46198 LIC. NO.	MICHIGAN ST. 3RD-1ST AVE WEST LHB PROJECT NO. 160811	CITY PROJECT NO. 1601	CONSTRUCTION DETAILS SHEET NO. 38 OF 49 SHEETS

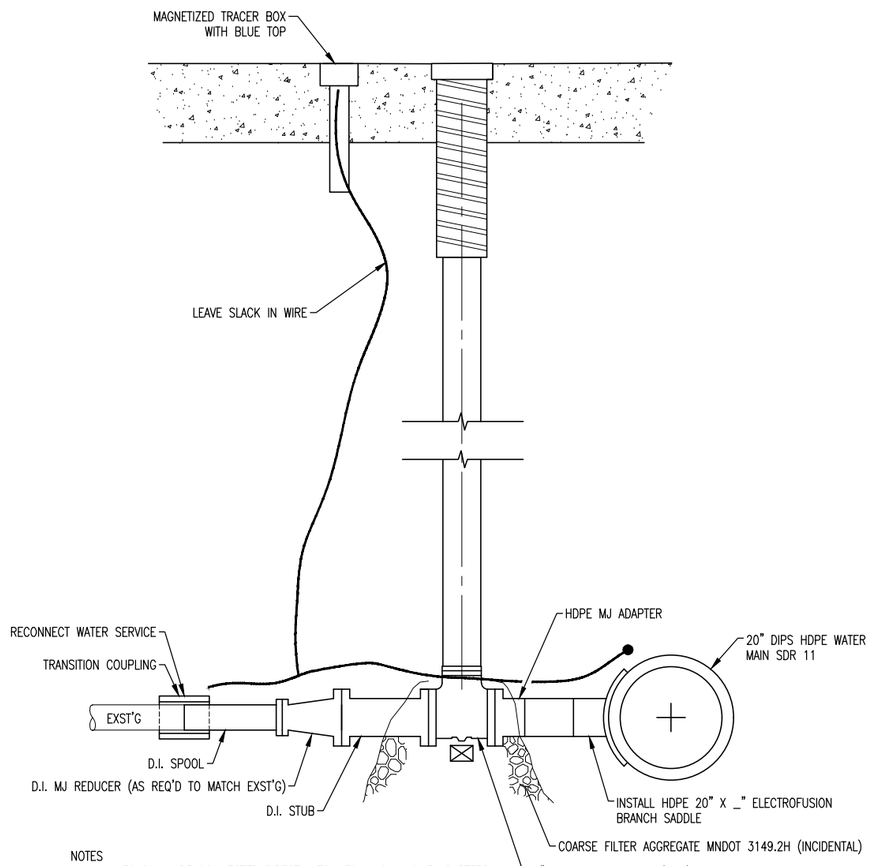

NOTES
1. VALVES SHALL BE CONNECTED DIRECTLY TO MECHANICAL JOINT ADAPTERS.
2. ALL BOLTS SHALL BE COR-TEN WITH 6 OUNCE ZINC ANODE CAPS CONFORMING TO ASTM B-418 FOR ALL MECHANICAL JOINT FITTINGS.
3. SEE CONSTRUCTION PLANS FOR BRANCH SERVICE SIZE.

1 TYPICAL PERMANENT WATER SERVICE CONNECTION (4" AND LARGER)
NOT TO SCALE

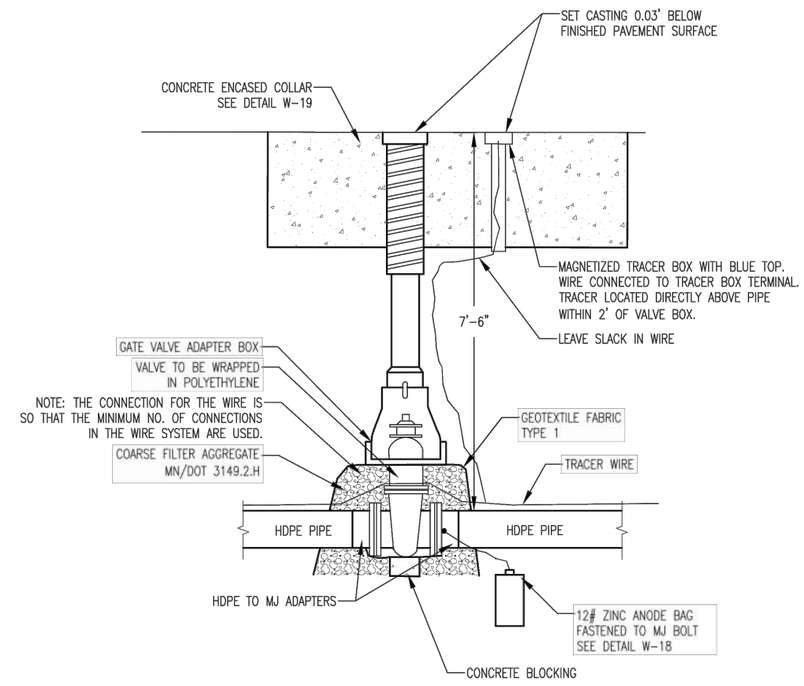

NOTES:
1. VALVES SHALL BE CONNECTED DIRECTLY TO HDPE WITH HDPE TO MECHANICAL JOINT ADAPTERS.
2. USE EPOXY COATING ON EXTERIOR OF VALVES.
3. ALL BOLTS SHALL BE COR-TEN WITH 6 OUNCE ZINC ANODE CAPS CONFORMING TO ASTM B-418 FOR ALL MECHANICAL JOINT FITTINGS.
4. FOR OPEN CUT PIPE INSTALLATIONS, ELECTROFUSION COUPLINGS ARE NOT ALLOWED FOR CONNECTION OF HDPE TO MJ ADAPTERS. FOR DIRECTIONAL DRILLED INSTALLATIONS, ONE ELECTROFUSION COUPLING MAY BE USED PER VALVE.
5. GATE VALVES WITH HDPE STUBS MAY BE USED IN LIEU OF MJ VALVES. ANODE SHALL BE CONNECTED DIRECTLY TO THE VALVE BONNET BOLTS.

WATER VALVE BOX – HDPE MAIN		W-17A
REVISED/APPROVED 02/07/2017	CITY OF DULUTH STANDARD DETAIL DEPT. OF PUBLIC WORKS AND UTILITIES	NO SCALE

NOTE: ALL DUCTILE IRON VALVES, HYDRANTS, OR FITTINGS SHALL RECEIVE ANODES.

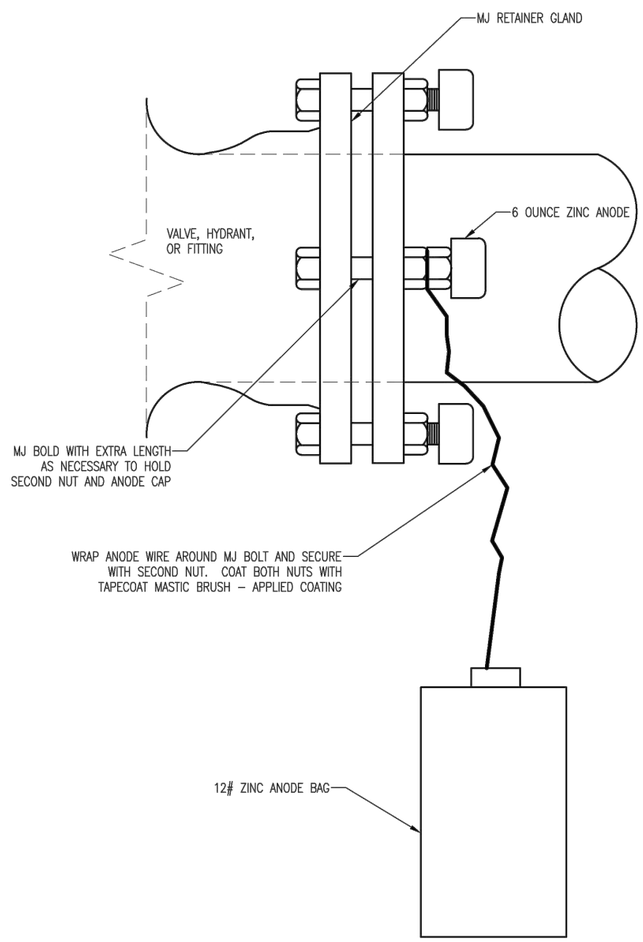

ANODE CONNECTION		W-18
REVISED/APPROVED 02/07/2017	CITY OF DULUTH STANDARD DETAIL DEPT. OF PUBLIC WORKS AND UTILITIES	NO SCALE

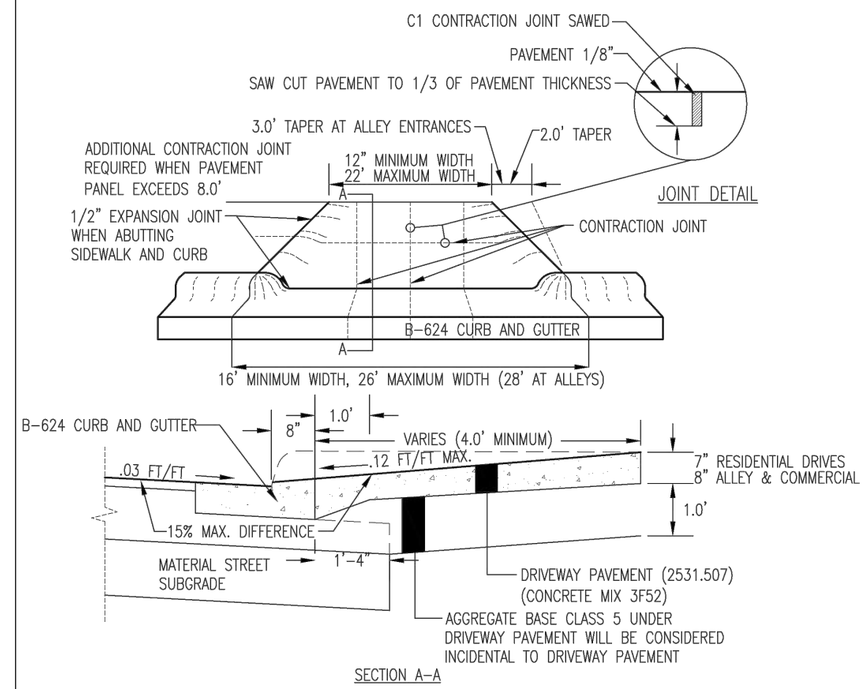

NOTES:

1. WHERE THERE IS NO SIDEWALK OR THERE IS A GRASS BOULEVARD BETWEEN THE SIDEWALK AND THE BACK OF CURB THE CREST OF THE DRIVEWAY MUST BE AT LEAST 6" ABOVE GUTTER TO CONTAIN RUNOFF.
2. WHERE THERE IS SIDEWALK DIRECTLY BEHIND THE CURB, DRIVEWAY PROFILE SLOPE SHALL BE FLATTENED TO MEET ADA ACCESSIBLE ROUTE STANDARDS

DRIVEWAY & ALLEY ENTRANCES		STR-5
REVISED/APPROVED 01/20/2017	CITY OF DULUTH STANDARD DETAIL DEPT. OF PUBLIC WORKS AND UTILITIES	NO SCALE

PLOT DATE: 2/24/2017 9:07:37 AM FILE: R:\16Pro\160811\600 Drawings\C\160811_12.3_Construction Details.dwg

I HEREBY CERTIFY that this plan, specification or report was prepared by me or under my direct supervision and that I am a duly Licensed Professional Engineer under the laws of the State of Minnesota.	BRAD SCOTT PRINTED NAME	SIGNATURE	02-23-17 DATE 46198 LIC. NO.	MICHIGAN ST. 3RD-1ST AVE WEST LHB PROJECT NO. 160811	CITY PROJECT NO. 1601	CONSTRUCTION DETAILS SHEET NO. 40 OF 49 SHEETS

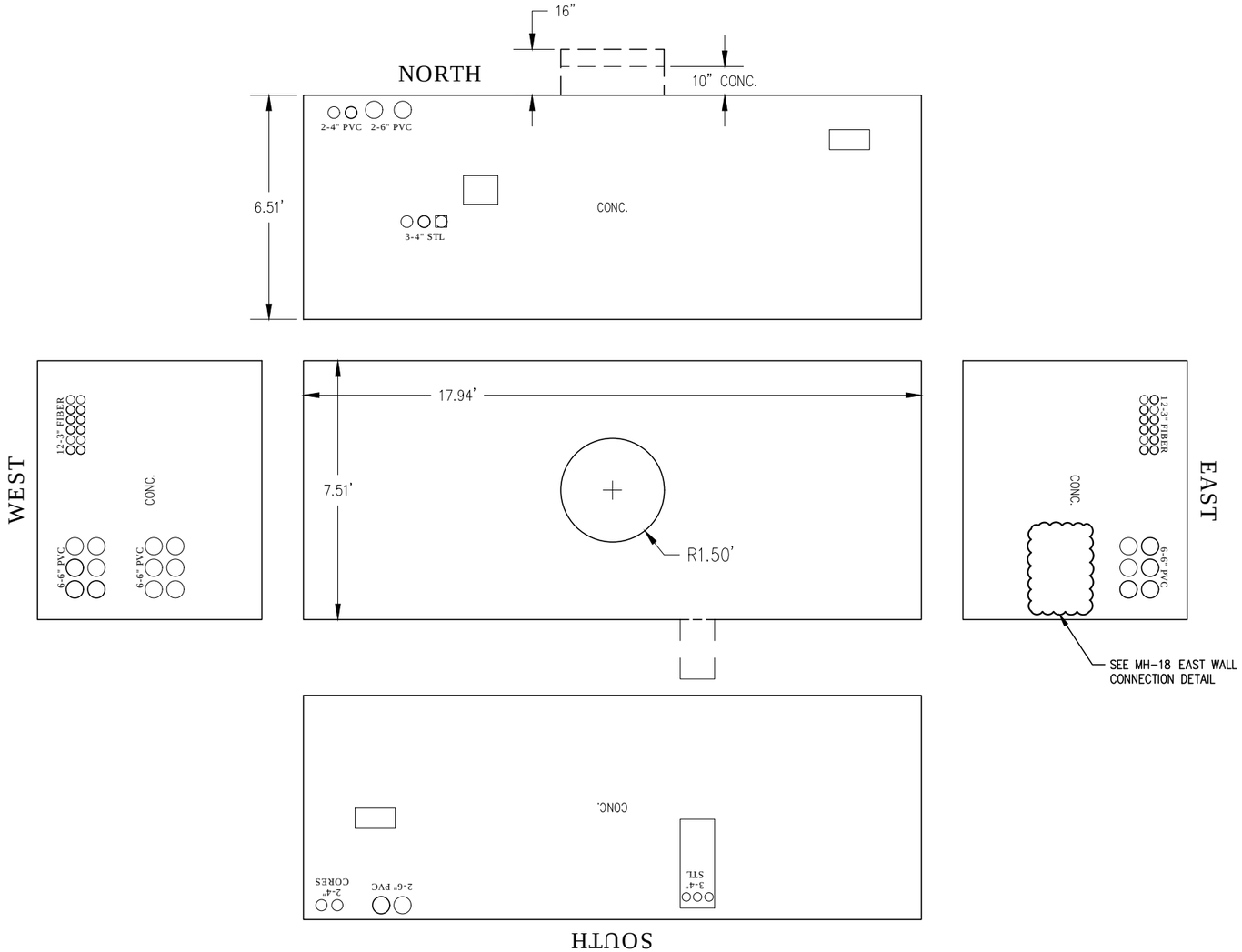

1 MH-281 BUTTERFLY DIAGRAM
NOT TO SCALE

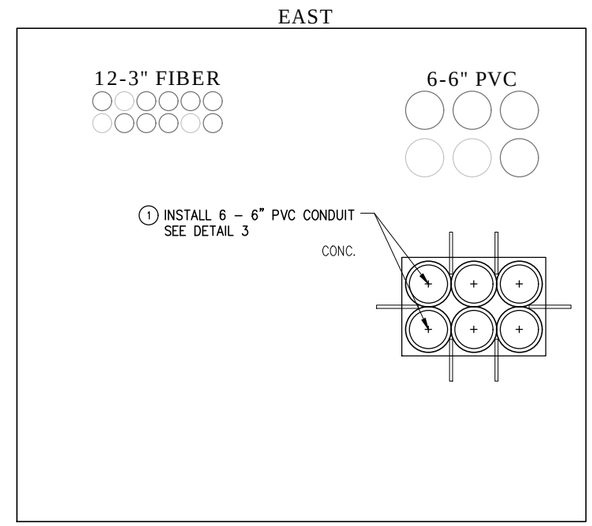

2 MH-18 EAST WALL CONNECTION DETAIL
NOT TO SCALE

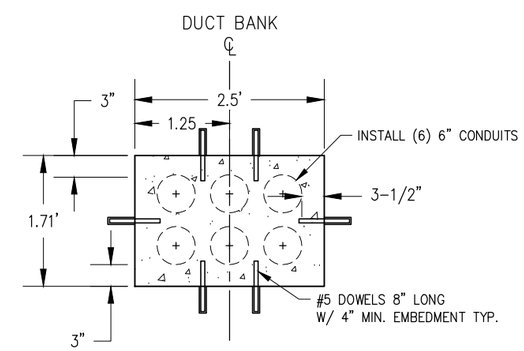

3 TYPICAL CONNECTION DETAIL 1
NOT TO SCALE

WORK TO BE DONE

DUCT BANK PENETRATION 1

1. CUT 20 ½" X 30" HOLE IN THE EAST CONCRETE WALL & REMOVE ALL LOOSE CONCRETE.
2. INSTALL #5 EPOXY COATED REBAR DOWELS INTO THE CONCRETE WITH 4" MINIMUM EMBEDMENT USING HILTI HIT-RE-500 V3 INJECTABLE MORTAR OR APPROVED EQUAL.
3. PLACE 6 – 6" DIAMETER PVC CONDUITS IN THE HOLE.
4. USE 4000 PSI CONCRETE TO ENCASE THE NEW CONDUITS.

KEY NOTES:

1 PAID FOR AS "CONNECT INTO EXISTING ELECTRICAL MANHOLE" BY THE EACH FOR CONNECTING (6) CONDUITS AS SHOWN.

PLOT DATE: 2/24/2017 9:07:46 AM FILE: R:\16Pro\160811\600 Drawings\C\160811_12.4_Construction Details_Vaults.dwg

I HEREBY CERTIFY that this plan, specification or report was prepared by me or under my direct supervision and that I am a duly Licensed Professional Engineer under the laws of the State of Minnesota.	BRAD SCOTT PRINTED NAME	SIGNATURE	02-23-17 DATE 46198 LIC. NO.	MICHIGAN ST. 3RD-1ST AVE WEST LHB PROJECT NO. 160811	CITY PROJECT NO. 1601	CONSTRUCTION DETAILS SHEET NO. 41 OF 49 SHEETS

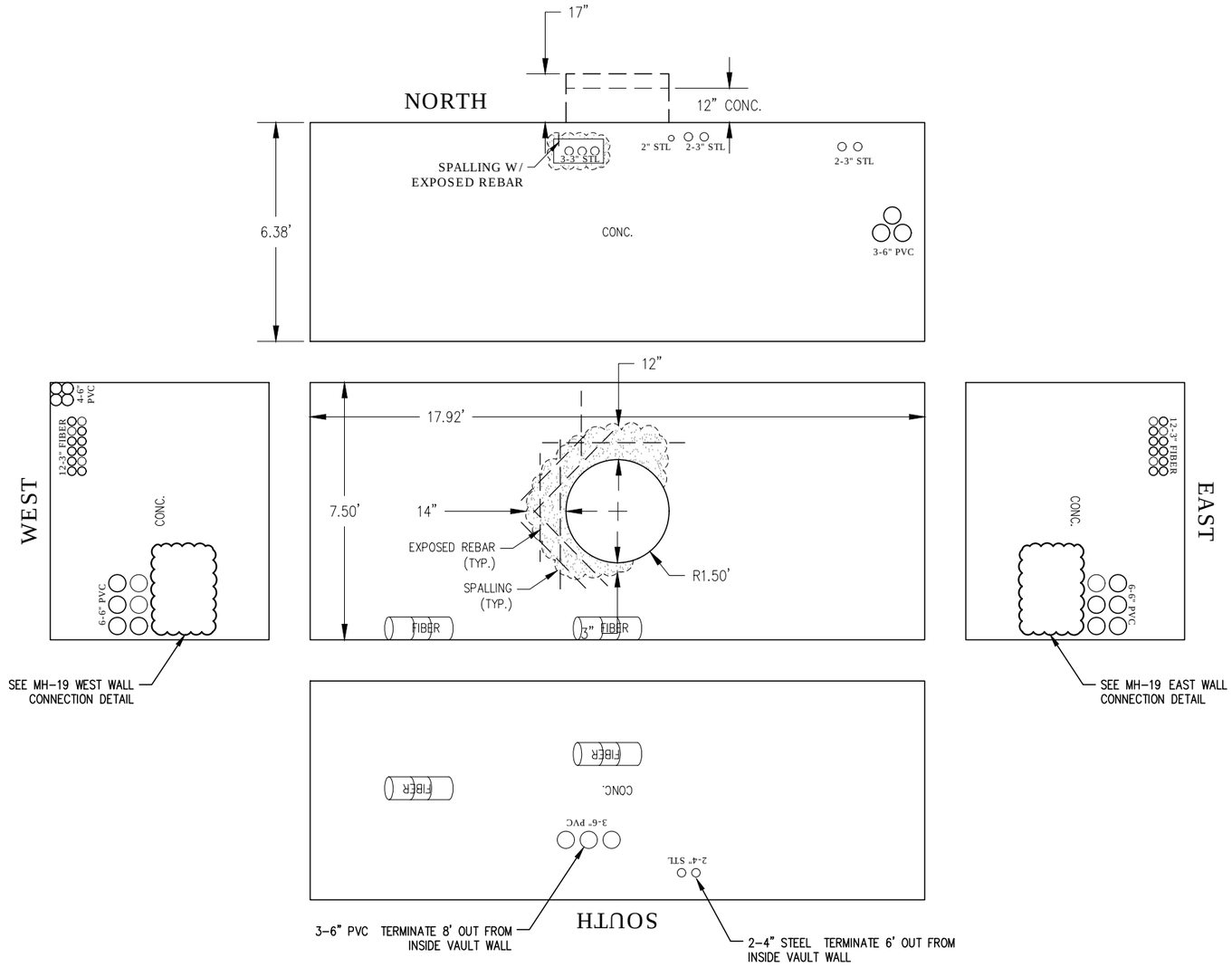

1 MH-19 BUTTERFLY DIAGRAM
NOT TO SCALE

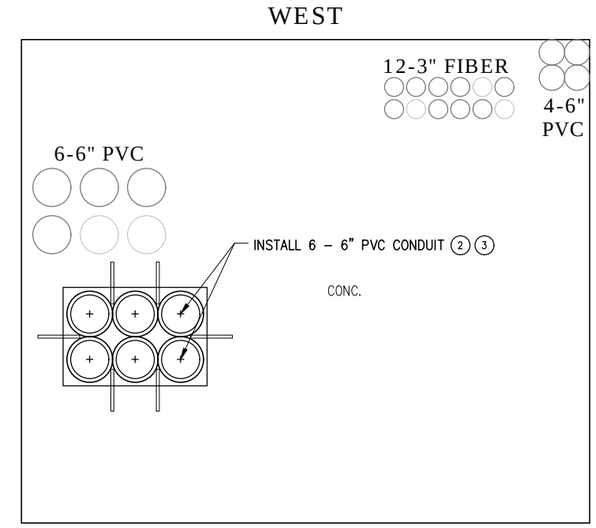

2 MH-19 WEST WALL CONNECTION DETAIL
NOT TO SCALE

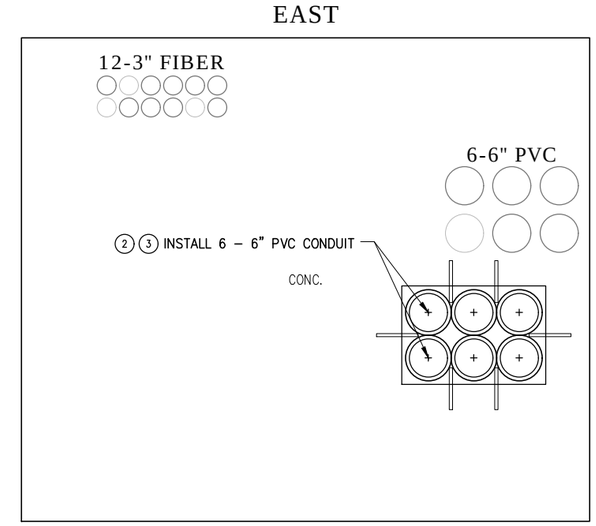

3 MH-19 EAST WALL CONNECTION DETAIL
NOT TO SCALE

WORK TO BE DONE

SPALL REPAIR (1)

1. REMOVE ALL LOOSE/SPALLING CONCRETE TO SOLID CONCRETE.
2. REMOVE ALL CORROSION/RUST FROM EXPOSED REBAR SURFACES.
3. COAT EXPOSED REBAR WITH SIKA ARMATEC 110 EPOCEM OR APPROVED EQUIVALENT EPOXY TO ALL EXPOSED REBAR SURFACES.
4. CLEAN ALL EXPOSED CONCRETE SURFACES OF DUST & DEBRIS.
5. USE FIVE STAR STRUCTURAL CONCRETE V/O OR APPROVED EQUAL TO FILL ALL SPALLED CONCRETE AREAS.

DUCT BANK PENETRATION (2)

1. CUT 20 $\frac{1}{2}$" X 30" HOLE IN THE EAST & WEST CONCRETE WALLS & REMOVE ALL LOOSE CONCRETE.
2. INSTALL #5 EPOXY COATED REBAR DOWELS INTO THE CONCRETE WITH 4" MINIMUM EMBEDMENT USING HILTI HIT-RE-500 V3 INJECTABLE MORTAR OR APPROVED EQUAL.
3. PLACE 6 – 6" DIAMETER PVC CONDUITS IN THE HOLE.
4. USE 4000 PSI CONCRETE TO ENCASE THE NEW CONDUITS.

KEY NOTES:

(1) SHALL BE INCLUDED FOR PAYMENT UNDER THE SINGLE LUMP SUM PAY ITEM, "REPAIR ELECTRICAL MANHOLE – 19".

(2) PAID FOR AS "CONNECT INTO EXISTING ELECTRICAL MANHOLE" BY THE EACH FOR CONNECTING (6) CONDUITS AS SHOWN.

(3) SEE TYPICAL CONNECTION DETAIL ON SHEET 41.

PLOT DATE: 2/24/2017 9:07:51 AM FILE: R:\16Pro\160811\600 Drawings\C\160811_12.4_Construction Details_Vaults.dwg

I HEREBY CERTIFY that this plan, specification or report was prepared by me or under my direct supervision and that I am a duly Licensed Professional Engineer under the laws of the State of Minnesota.	BRAD SCOTT PRINTED NAME	SIGNATURE	02-23-17 DATE 46198 LIC. NO.	MICHIGAN ST. 3RD-1ST AVE WEST LHB PROJECT NO. 160811	CITY PROJECT NO. 1601	CONSTRUCTION DETAILS SHEET NO. 42 OF 49 SHEETS

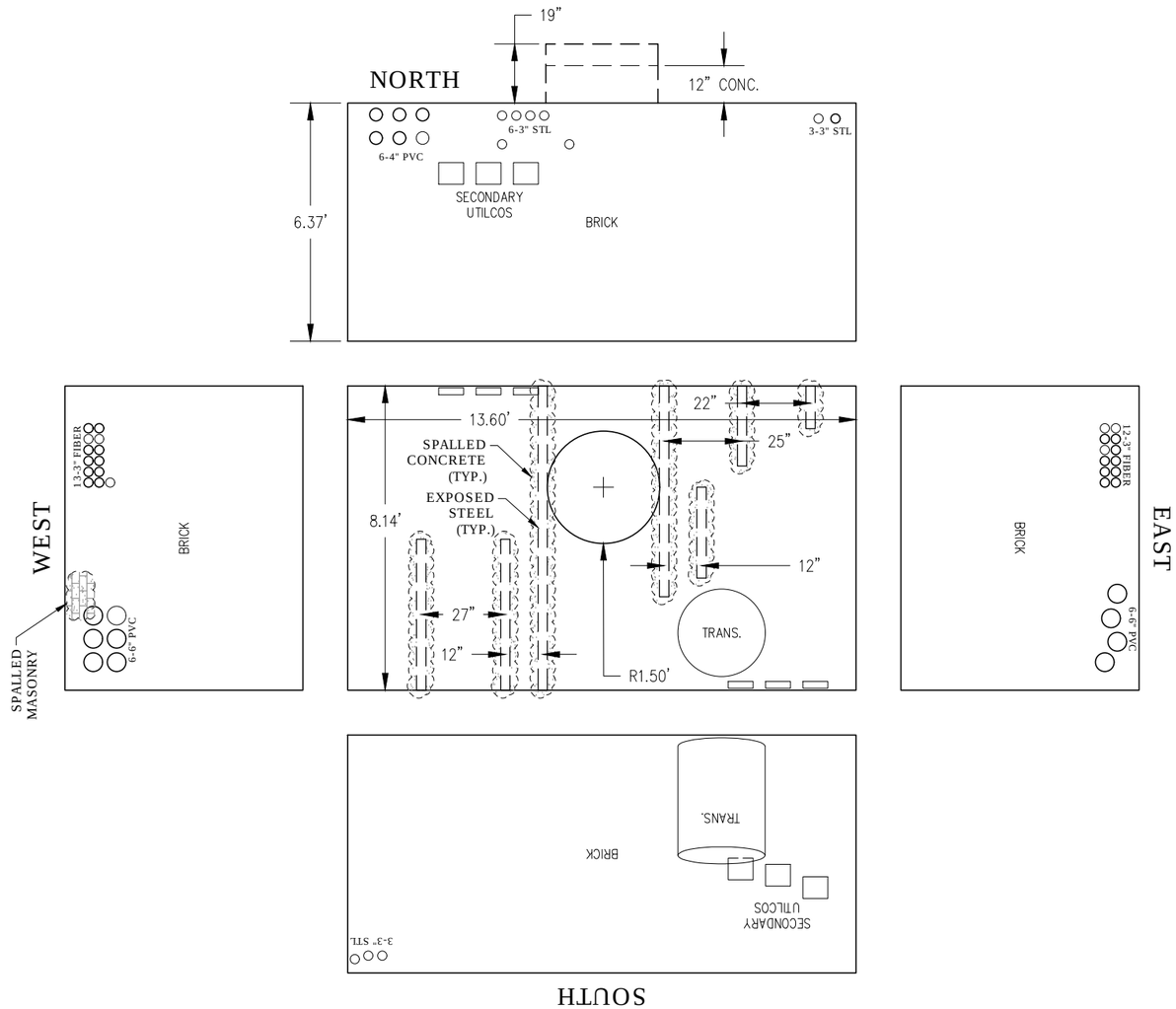

1 MH-20 BUTTERFLY DIAGRAM
NOT TO SCALE

WORK TO BE DONE

SPALL REPAIR (1)

1. REMOVE ALL LOOSE/SPALLING CONCRETE TO SOLID CONCRETE.
2. REMOVE ALL CORROSION/RUST FROM EXPOSED STEEL SURFACES.
3. COAT EXPOSED STEEL WITH SIKA ARMATEC 110 EPOCEM OR APPROVED EQUIVALENT EPOXY TO ALL EXPOSED STEEL SURFACES.
4. CLEAN ALL EXPOSED CONCRETE SURFACES OF DUST & DEBRIS.
5. USE FIVE STAR STRUCTURAL CONCRETE V/O OR APPROVED EQUAL TO FILL ALL SPALLED CONCRETE AREAS.

KEY NOTES:

(1) SHALL BE INCLUDED FOR PAYMENT UNDER THE SINGLE LUMP SUM PAY ITEM, "REPAIR ELECTRICAL MANHOLE – 20".

PLOT DATE: 2/24/2017 9:07:56 AM FILE: R:\16Proj\160811\600 Drawings\C\160811_12.4_Construction Details_Vaults.dwg

I HEREBY CERTIFY that this plan, specification or report was prepared by me or under my direct supervision and that I am a duly Licensed Professional Engineer under the laws of the State of Minnesota.	BRAD SCOTT PRINTED NAME	SIGNATURE	02-23-17 DATE 46198 LIC. NO.	MICHIGAN ST. 3RD-1ST AVE WEST LHB PROJECT NO. 160811	CITY PROJECT NO. 1601	CONSTRUCTION DETAILS SHEET NO. 43 OF 49 SHEETS

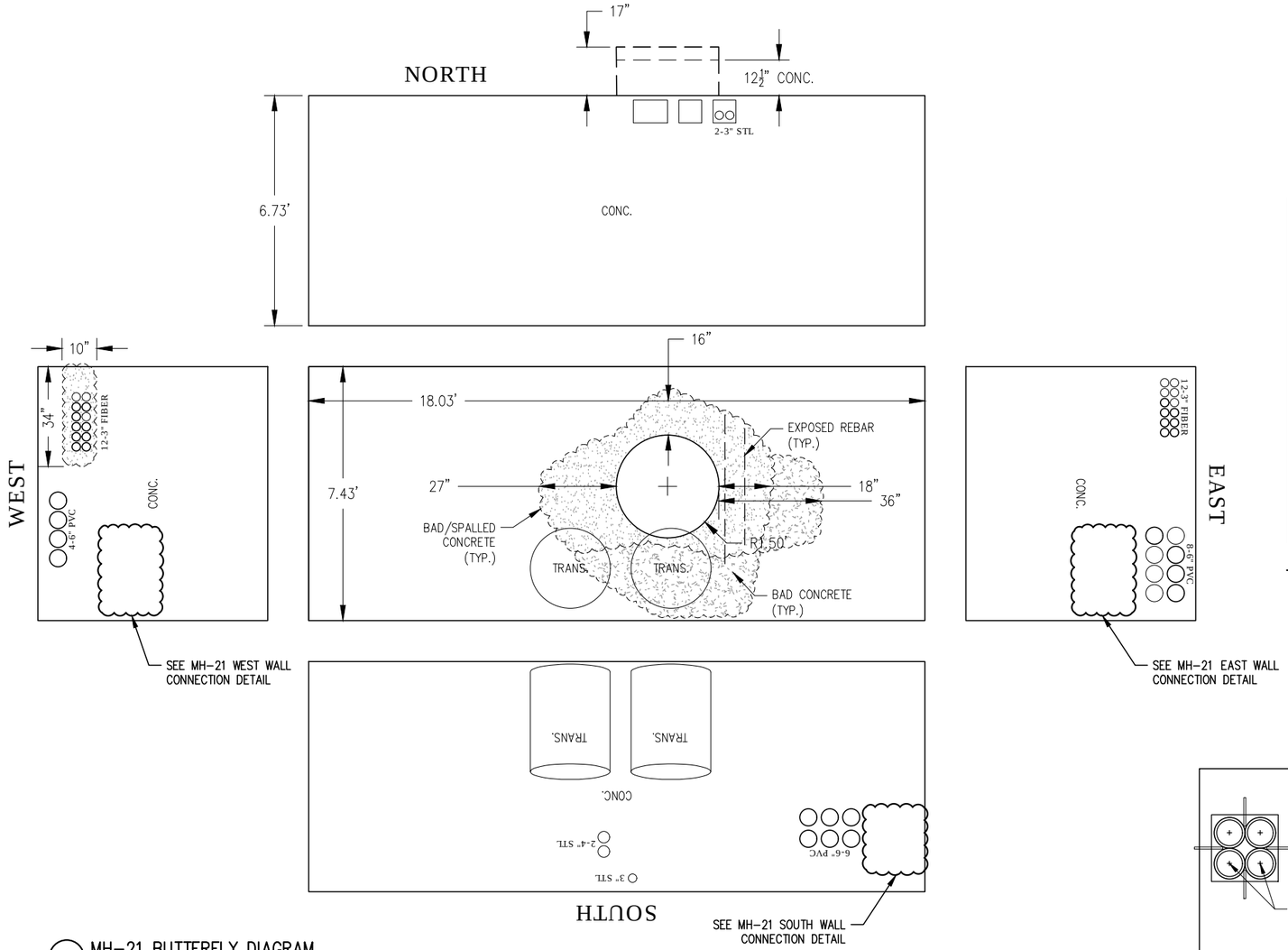

1 MH-21 BUTTERFLY DIAGRAM
NOT TO SCALE

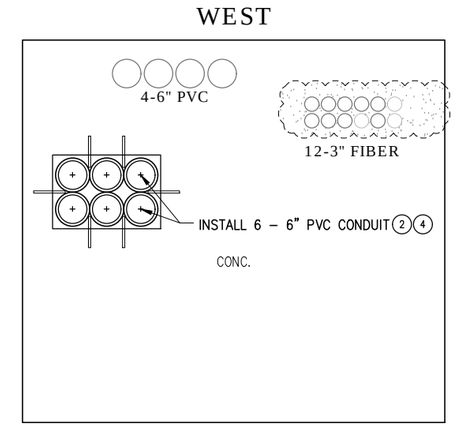

2 MH-21 WEST WALL CONNECTION DETAIL
NOT TO SCALE

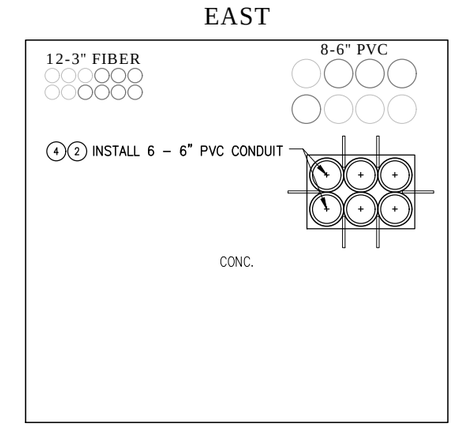

3 MH-21 EAST WALL CONNECTION DETAIL
NOT TO SCALE

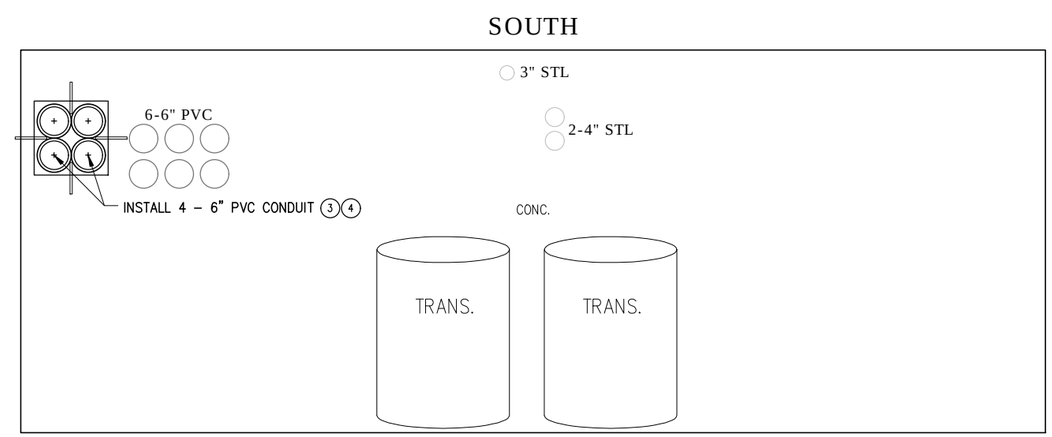

4 MH-21 SOUTH WALL CONNECTION DETAIL
NOT TO SCALE

WORK TO BE DONE

SPALL REPAIR (1)

1. REMOVE ALL LOOSE/SPALLING CONCRETE TO SOLID CONCRETE.
2. REMOVE ALL CORROSION/RUST FROM EXPOSED REBAR SURFACES.
3. COAT EXPOSED REBAR WITH SIKA ARMATEC 110 EPOCEM OR APPROVED EQUIVALENT EPOXY TO ALL EXPOSED REBAR SURFACES.
4. CLEAN ALL EXPOSED CONCRETE SURFACES OF DUST/DEBRIS.
5. USE FIVE STAR STRUCTURAL CONCRETE V/O OR APPROVED EQUAL TO FILL ALL SPALLED CONCRETE AREAS.

DUCT BANK PENETRATION (2)

1. CUT 20 ½" X 30" HOLE IN THE EAST & WEST CONCRETE WALLS; AND 20 ½" X 20 ½" HOLE IN THE SOUTH CONCRETE WALL; & REMOVE ALL LOOSE CONCRETE.
2. INSTALL #5 EPOXY COATED REBAR DOWELS INTO THE CONCRETE WITH 4" MINIMUM EMBEDMENT USING HILTI HIT-RE-500 V3 INJECTABLE MORTAR OR APPROVED EQUAL.
3. PLACE 6 – 6" DIAMETER PVC CONDUITS IN THE EAST & WEST HOLES; AND PLACE 4 – 6" DIAMETER PVC CONDUITS IN THE SOUTH HOLE.
4. USE 4000 PSI CONCRETE TO ENCASE THE NEW CONDUITS.

KEY NOTES:

(1) SHALL BE INCLUDED FOR PAYMENT UNDER THE SINGLE LUMP SUM PAY ITEM, "REPAIR ELECTRICAL MANHOLE – 21".

(2) PAID FOR AS "CONNECT INTO EXISTING ELECTRICAL MANHOLE" BY THE EACH FOR CONNECTING (6) CONDUITS AS SHOWN.

(3) PAID FOR AS "CONNECT INTO EXISTING ELECTRICAL MANHOLE" BY THE EACH FOR CONNECTING (4) CONDUITS AS SHOWN.

(4) SEE TYPICAL CONNECTION DETAIL ON SHEET 41.

PLOT DATE: 2/24/2017 9:08:01 AM FILE: R:\16Proj\160811\600 Drawings\C\160811_12.4_Construction Details_Vaults.dwg

I HEREBY CERTIFY that this plan, specification or report was prepared by me or under my direct supervision and that I am a duly Licensed Professional Engineer under the laws of the State of Minnesota.

BRAD SCOTT
PRINTED NAME

SIGNATURE

02-23-17
DATE

46198
LIC. NO.

MICHIGAN ST. 3RD-1ST AVE WEST

LHB PROJECT NO. 160811

CITY PROJECT NO. 1601

CONSTRUCTION DETAILS

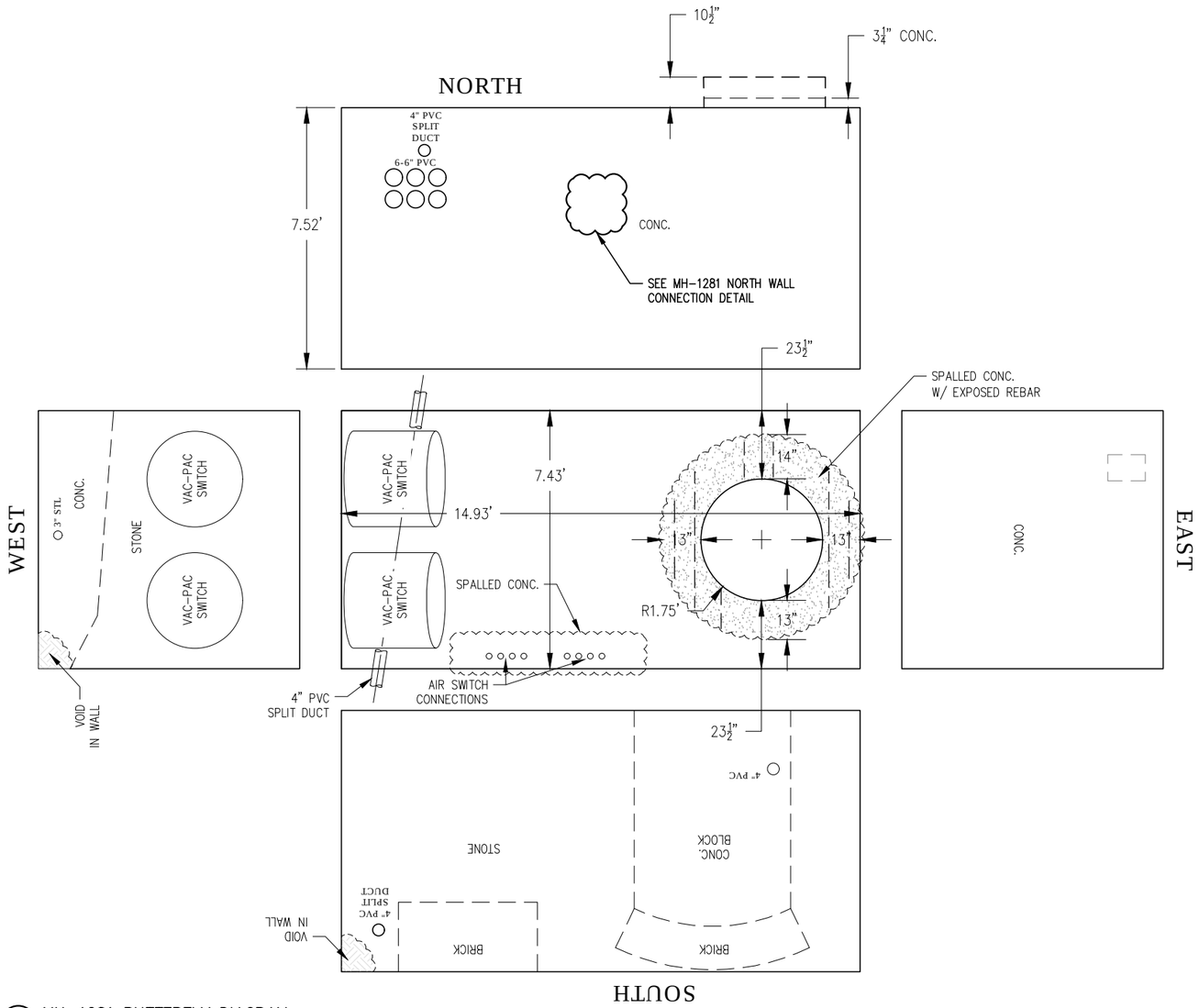

1 MH-1281 BUTTERFLY DIAGRAM
NOT TO SCALE

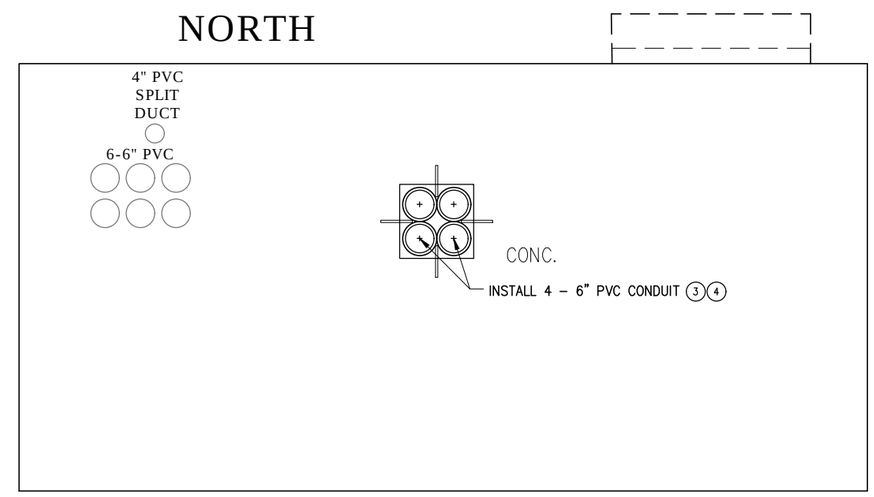

2 MH-1281 NORTH WALL CONNECTION DETAIL
NOT TO SCALE

WORK TO BE DONE

SPALL REPAIR 1

1. REMOVE ALL LOOSE/SPALLING CONCRETE TO SOLID CONCRETE.
2. REMOVE ALL CORROSION/RUST FROM EXPOSED REBAR SURFACES.
3. COAT EXPOSED REBAR WITH SIKA ARMATEC 110 EPOCEM OR APPROVED EQUIVALENT EPOXY TO ALL EXPOSED REBAR SURFACES.
4. CLEAN ALL EXPOSED CONCRETE SURFACES OF DUST/DEBRIS.
5. USE FIVE STAR STRUCTURAL CONCRETE V/O OR APPROVED EQUAL TO FILL ALL SPALLED CONCRETE AREAS.

DUCT BANK PENETRATION 2

1. CUT 20 ½" X 20" HOLE IN THE NORTH CONCRETE WALL & REMOVE ALL LOOSE CONCRETE.
2. INSTALL #5 EPOXY COATED REBAR DOWELS INTO THE CONCRETE WITH 4" MINIMUM EMBEDMENT USING HILTI HIT-RE-500 V3 INJECTABLE MORTAR OR APPROVED EQUAL.
3. PLACE 4 – 6" DIAMETER PVC CONDUITS IN THE HOLE.
4. USE 4000 PSI CONCRETE TO ENCASE THE NEW CONDUITS.

WALL VOID REPAIR

1. DOWEL #5 BARS @ 9" O.C. W/ MIN 6" EMBEDMENT USING HILTI-HY70 ADHESIVE FOR EMBEDDING INTO MASONRY & HILTI RE-500 V3 ADHESIVE FOR EMBEDDING INTO CONCRETE
2. CLEAN THE CONCRETE & REBAR SURFACES WITH THE VOID OF DUST/ DEBRIS.
3. USE FIVE STAR STRUCTURAL CONCRETE V/O OR APPROVED EQUAL TO FILL THE VOID.

KEY NOTES:

1. SHALL BE INCLUDED FOR PAYMENT UNDER THE SINGLE LUMP SUM PAY ITEM, "REPAIR ELECTRICAL MANHOLE – 1281".
2. PAID FOR AS "CONNECT INTO EXISTING ELECTRICAL MANHOLE" BY THE EACH FOR CONNECTING (6) CONDUITS AS SHOWN.
3. PAID FOR AS "CONNECT INTO EXISTING ELECTRICAL MANHOLE" BY THE EACH FOR CONNECTING (4) CONDUITS AS SHOWN.
4. SEE TYPICAL CONNECTION DETAIL ON SHEET 41.

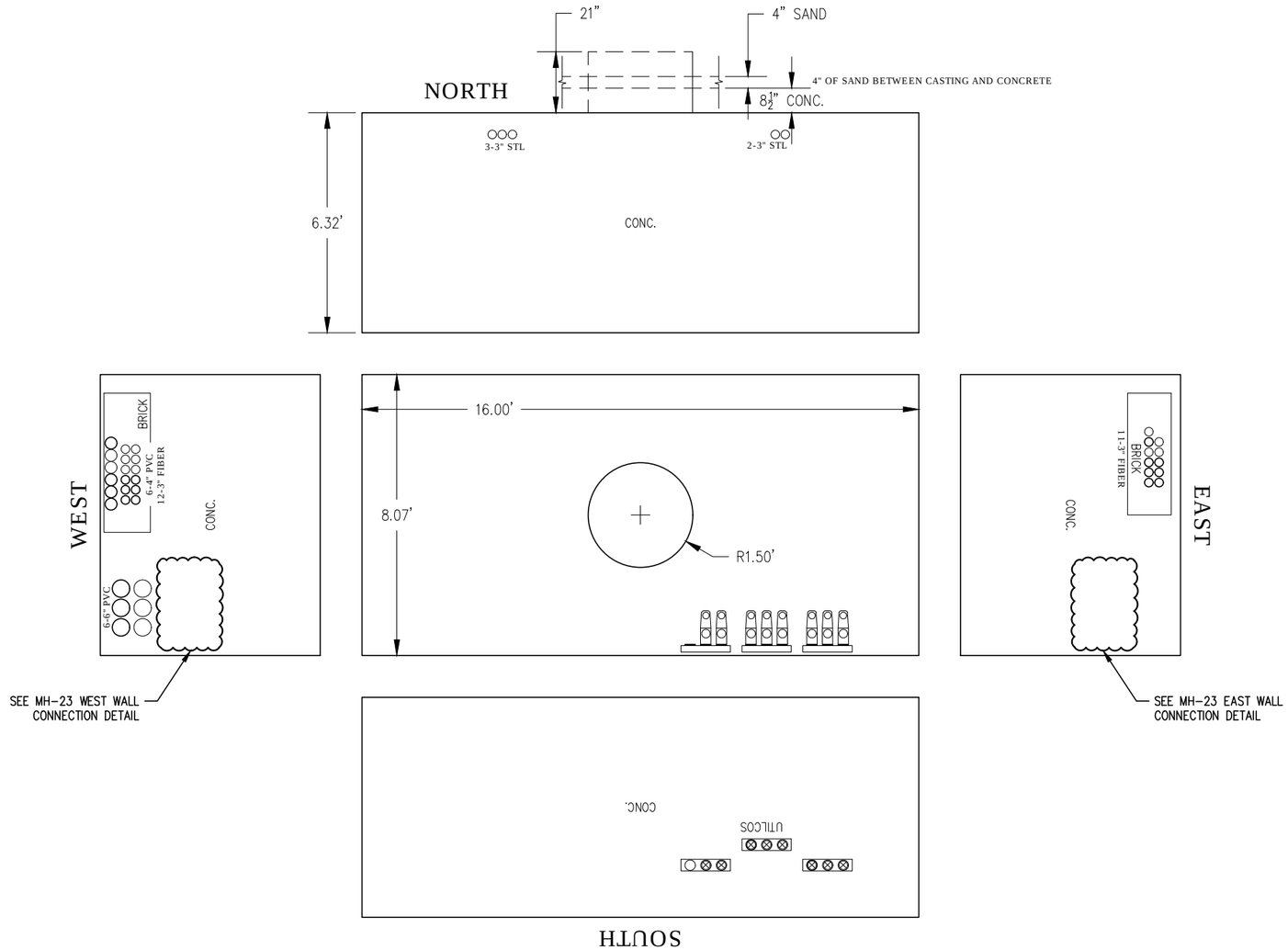

1 MH-23 BUTTERFLY DIAGRAM
NOT TO SCALE

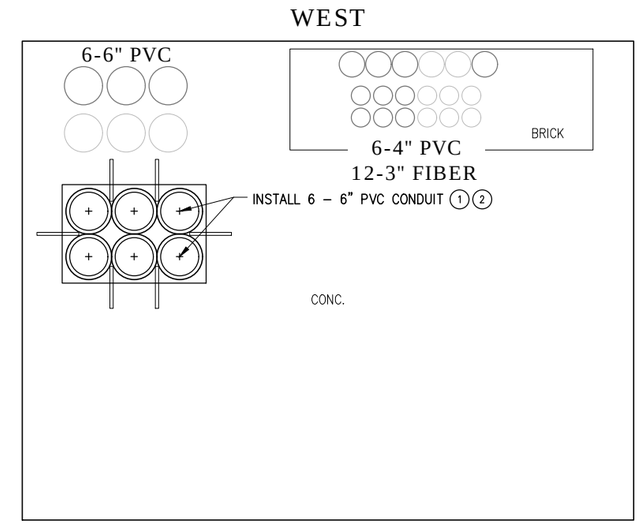

2 MH-23 WEST WALL CONNECTION DETAIL
NOT TO SCALE

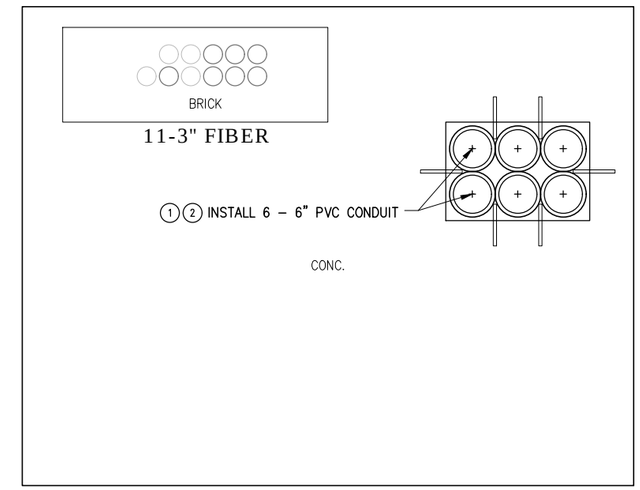

3 MH-23 EAST WALL CONNECTION DETAIL
NOT TO SCALE

WORK TO BE DONE

DUCT BANK PENETRATION 1

1. CUT 20 ½" X 30" HOLE IN THE EAST CONCRETE WALL & REMOVE ALL LOOSE CONCRETE.
2. INSTALL #5 EPOXY COATED REBAR DOWELS INTO THE CONCRETE WITH 4" MINIMUM EMBEDMENT USING HILTI HIT-RE-500 V3 INJECTABLE MORTAR OR APPROVED EQUAL.
3. PLACE 6 – 6" DIAMETER PVC CONDUITS IN THE HOLE.
4. USE 4000 PSI CONCRETE TO ENCASE THE NEW CONDUITS.

KEY NOTES:

1 PAID FOR AS "CONNECT INTO EXISTING ELECTRICAL MANHOLE" BY THE EACH FOR CONNECTING (6) CONDUITS AS SHOWN.

2 SEE TYPICAL CONNECTION DETAIL ON SHEET 41.

I HEREBY CERTIFY that this plan, specification or report was prepared by me or under my direct supervision and that I am a duly Licensed Professional Engineer under the laws of the State of Minnesota.	BRAD SCOTT PRINTED NAME	SIGNATURE	02-23-17 DATE 46198 LIC. NO.	MICHIGAN ST. 3RD-1ST AVE WEST LHB PROJECT NO. 160811	CITY PROJECT NO. 1601	CONSTRUCTION DETAILS SHEET NO. 46 OF 49 SHEETS

PLOT DATE: 2/24/2017 9:08:11 AM FILE: R:\16Proj\160811\600 Drawings\C\160811_12.4_Construction Details_Vaults.dwg

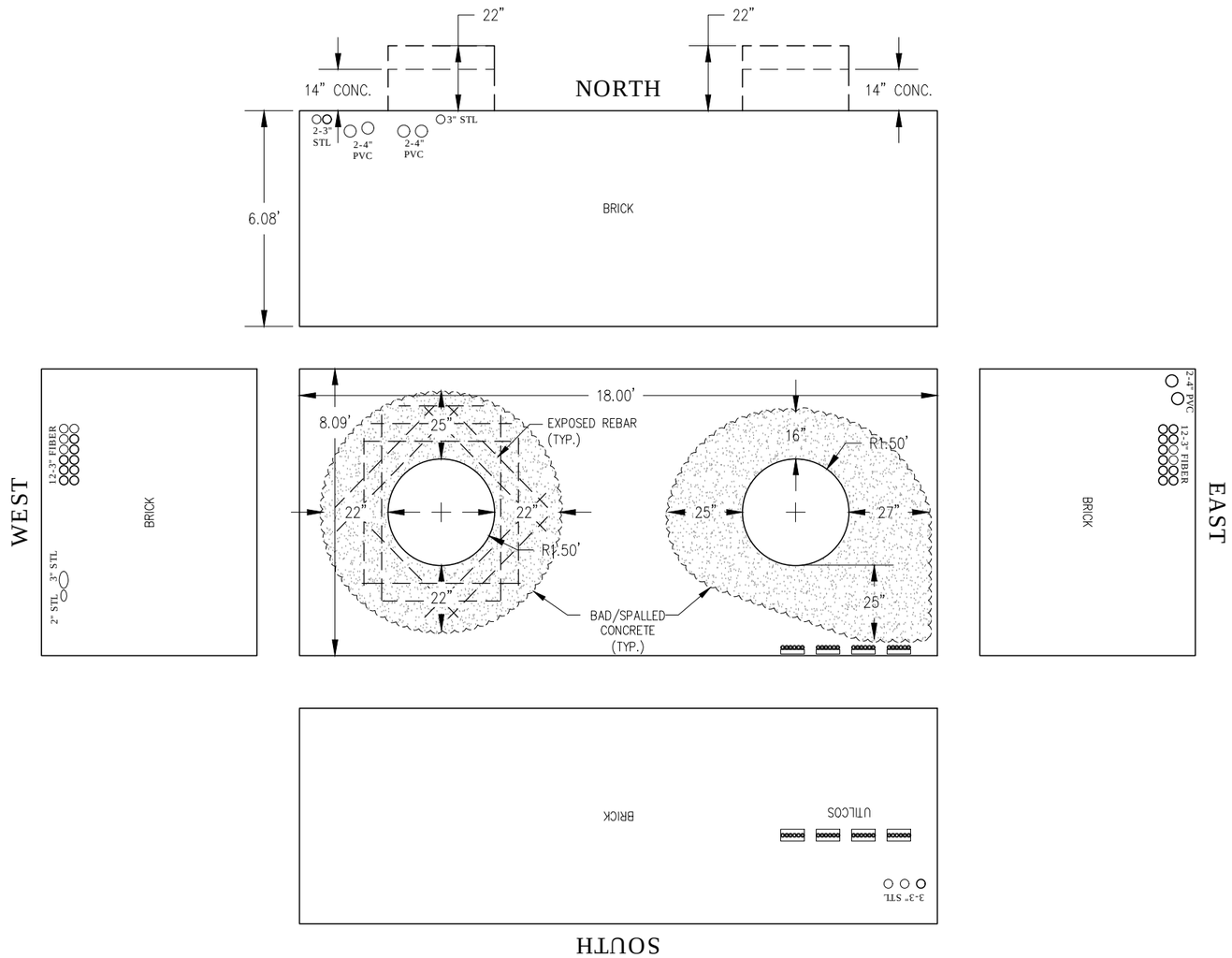

1 MH-24 BUTTERFLY DIAGRAM
NOT TO SCALE

WORK TO BE DONE

SPALL REPAIR 1

1. REMOVE ALL LOOSE/SPALLING CONCRETE TO SOLID CONCRETE.
2. REMOVE ALL CORROSION/RUST FROM EXPOSED REBAR SURFACES.
3. COAT EXPOSED REBAR WITH SIKA ARMATEC 110 EPOCEM OR APPROVED EQUIVALENT EPOXY TO ALL EXPOSED REBAR SURFACES.
4. CLEAN ALL EXPOSED CONCRETE SURFACES OF DUST & DEBRIS.
5. USE FIVE STAR STRUCTURAL CONCRETE V/O OR APPROVED EQUAL TO FILL ALL SPALLED CONCRETE AREAS.

KEY NOTES:

1 SHALL BE INCLUDED FOR PAYMENT UNDER THE SINGLE LUMP SUM PAY ITEM, "REPAIR ELECTRICAL MANHOLE – 24".

PLOT DATE: 2/24/2017 9:08:16 AM FILE: R:\16Proj\160811\600 Drawings\C\160811_12.4_Construction Details_Vaults.dwg

I HEREBY CERTIFY that this plan, specification or report was prepared by me or under my direct supervision and that I am a duly Licensed Professional Engineer under the laws of the State of Minnesota.	BRAD SCOTT PRINTED NAME	SIGNATURE	02-23-17 DATE 46198 LIC. NO.	MICHIGAN ST. 3RD-1ST AVE WEST LHB PROJECT NO. 160811	CITY PROJECT NO. 1601	CONSTRUCTION DETAILS SHEET NO. 47 OF 49 SHEETS

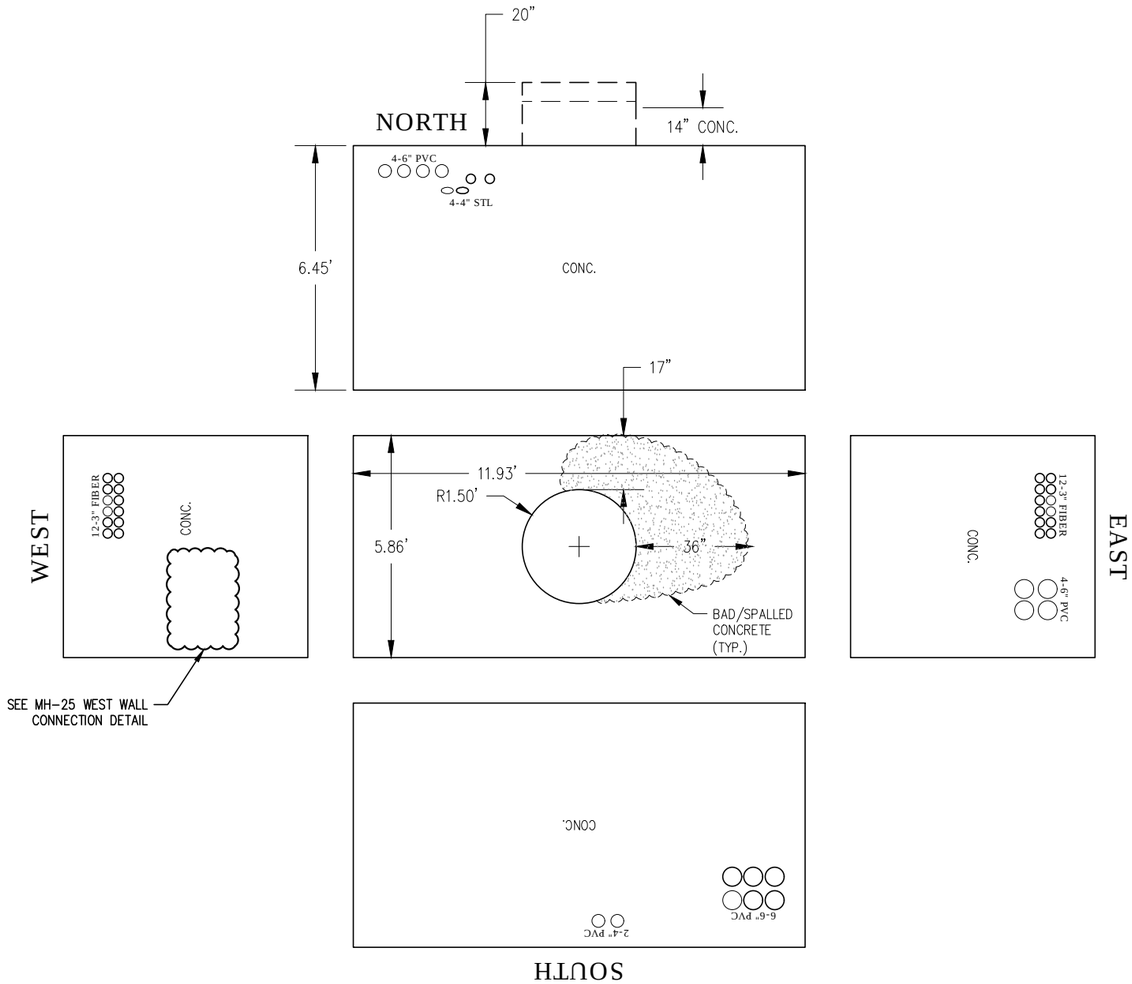

1 MH-25 BUTTERFLY DIAGRAM
NOT TO SCALE

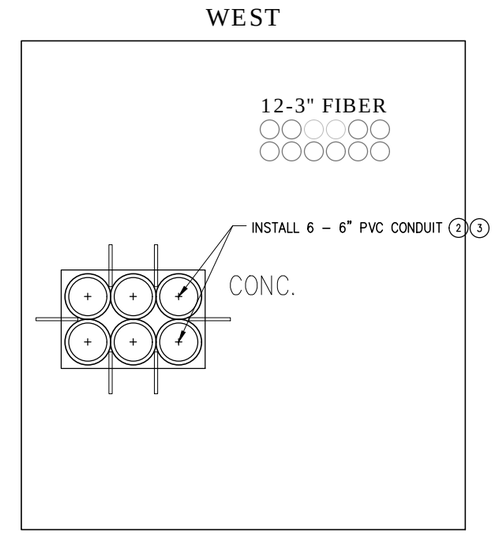

2 MH-25 WEST WALL CONNECTION DETAIL
NOT TO SCALE

WORK TO BE DONE

SPALL REPAIR 1

1. REMOVE ALL LOOSE/SPALLING CONCRETE TO SOLID CONCRETE.
2. REMOVE ALL CORROSION/RUST FROM EXPOSED REBAR SURFACES.
3. COAT EXPOSED REBAR WITH SIKA ARMATEC 110 EPOCEM OR APPROVED EQUIVALENT EPOXY TO ALL EXPOSED REBAR SURFACES.
4. CLEAN ALL EXPOSED CONCRETE SURFACES OF DUST & DEBRIS.
5. USE FIVE STAR STRUCTURAL CONCRETE V/O OR APPROVED EQUAL TO FILL ALL SPALLED CONCRETE AREAS.

DUCT BANK PENETRATION 2

1. CUT 20 $\frac{1}{2}$" X 30" HOLE IN THE EAST CONCRETE WALL & REMOVE ALL LOOSE CONCRETE.
2. INSTALL #5 EPOXY COATED REBAR DOWELS INTO THE CONCRETE WITH 4" MINIMUM EMBEDMENT USING HILTI HIT-RE-500 V3 INJECTABLE MORTAR OR APPROVED EQUAL.
3. PLACE 6 – 6" DIAMETER PVC CONDUITS IN THE HOLE.
4. USE 4000 PSI CONCRETE TO ENCASE THE NEW CONDUITS.

KEY NOTES:

1 SHALL BE INCLUDED FOR PAYMENT UNDER THE SINGLE LUMP SUM PAY ITEM, "REPAIR ELECTRICAL MANHOLE – 25".

2 PAID FOR AS "CONNECT INTO EXISTING ELECTRICAL MANHOLE" BY THE EACH FOR CONNECTING (6) CONDUITS AS SHOWN.

3 SEE TYPICAL CONNECTION DETAIL ON SHEET 41.

I HEREBY CERTIFY that this plan, specification or report was prepared by me or under my direct supervision and that I am a duly Licensed Professional Engineer under the laws of the State of Minnesota.	BRAD SCOTT PRINTED NAME	SIGNATURE	02-23-17 DATE 46198 LIC. NO.	MICHIGAN ST. 3RD–1ST AVE WEST LHB PROJECT NO. 160811	CITY PROJECT NO. 1601	CONSTRUCTION DETAILS SHEET NO. 48 OF 49 SHEETS

PLOT DATE: 2/24/2017 9:08:21 AM FILE: R:\16Proj\160811\600 Drawings\C\160811_12.4_Construction Details_Vaults.dwg

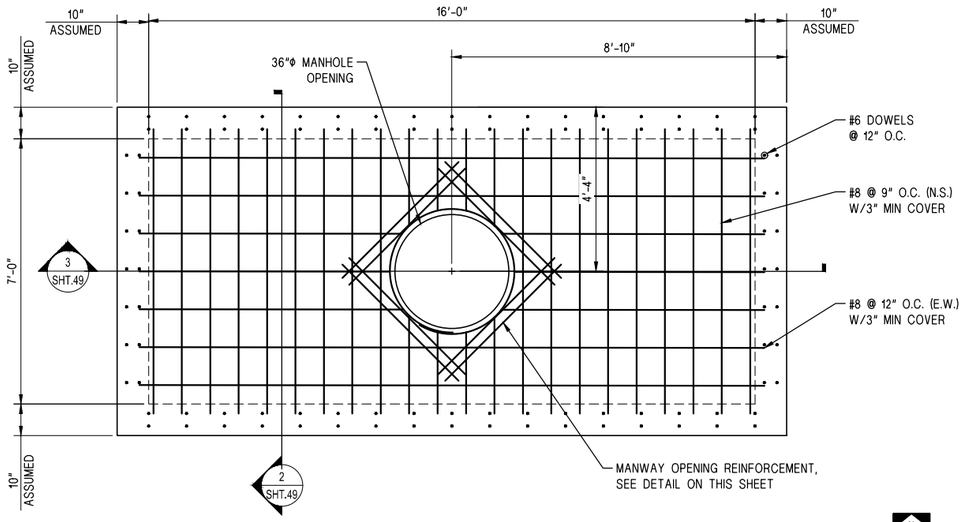

1 MH-26 VAULT COVER PLAN VIEW
1/2"=1'-0"

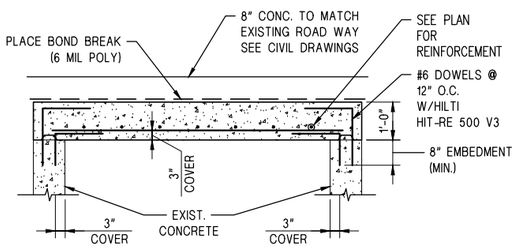

2 MH-26 SECTION
1/2"=1'-0"

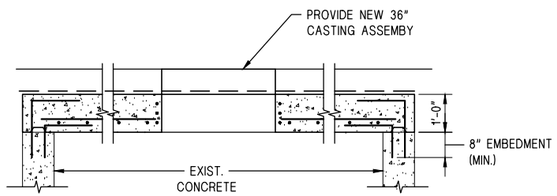

3 MH-26 SECTION
1/2"=1'-0"

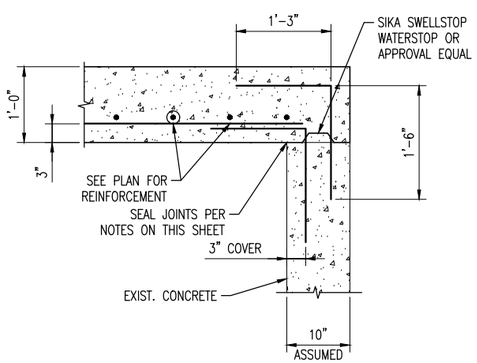

4 MH-26 WALL CORNER DETAIL
1 =1'-0"

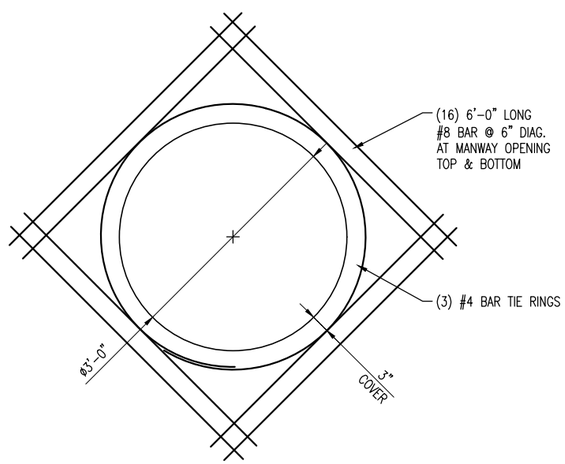

5 MH-26 MANWAY OPENING REINFORCEMENT
3/4"=1'-0"

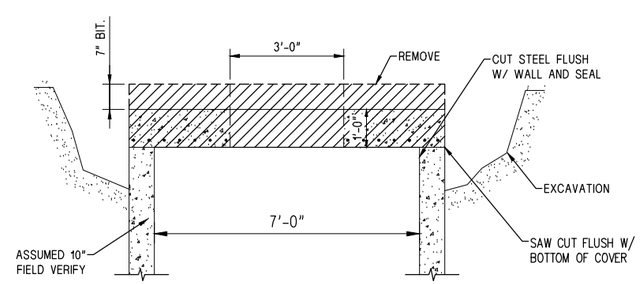

6 MH-26 REMOVAL CROSS SECTION
1/2"=1'-0"

GENERAL DESIGN DATA

A. BUILDING CODE

1. 2015 MINNESOTA STATE BUILDING CODE (MSBC).

2. 2012 INTERNATIONAL BUILDING CODE (IBC).

B. DESIGN LOADS

1. FLOOR LIVE LOAD:

	UNIFORM (PSF)	CONCENTRATED (LB)
HS-20 DESIGN TRUCK:	-	16,000
PEDESTRIAN:	90	

IMPACT FACTOR LOAD: 33%

LIVE LOAD REDUCTION WAS NOT UTILIZED IN THE DESIGN.

GENERAL CONSTRUCTION NOTES

A. CONSTRUCTION NOTES

1. ALL DIMENSIONS INVOLVING COORDINATION OF NEW WORK WITH EXISTING CONSTRUCTION SHALL BE FIELD-CHECKED BY THE CONTRACTOR AND FURNISHED TO THE SUBCONTRACTORS PRIOR TO FABRICATION OF ANY WORK. THE VERIFIED DIMENSIONS SHALL APPEAR AND BE NOTED ON THE SHOP DRAWINGS SUBMITTED.

2. THE CONTRACTOR IS RESPONSIBLE FOR THE PROTECTION OF EXISTING BUILDINGS, UTILITIES, STREETS, ETC. DURING CONSTRUCTION. CONTRACTOR IS RESPONSIBLE FOR DESIGN AND INSTALLATION OF ALL NECESSARY TEMPORARY BRACING.

3. ANY HOLES CUT IN NEW OR EXISTING CONSTRUCTION THAT ARE NOT DETAILED ON THE STRUCTURAL DRAWINGS SHALL BE REVIEWED WITH THE STRUCTURAL ENGINEER. COORDINATE ALL HOLES AND PENETRATIONS WITH OTHER DISCIPLINES.

4. THE STRUCTURE SHALL BE ADEQUATELY BRACED AND SHORED DURING CONSTRUCTION AGAINST WIND, ERECTION AND OTHER LOADS. STRUCTURAL MEMBERS ARE DESIGNED FOR IN-PLACE LOADS BASED ON FINAL SUPPORT CONDITIONS.

5. THE CONTRACTOR SHALL NOTIFY THE ENGINEER IMMEDIATELY OF DISCREPANCIES FOUND BETWEEN CONSTRUCTION DOCUMENTS AND ACTUAL FIELD CONDITIONS.

6. CONTRACTOR SHALL NOTIFY MINNESOTA POWER TO OBTAIN ENTRY IN THE MANHOLE. MINNESOTA POWER PERSONNEL MUST BE ON SITE WHILE WORK IS PERFORMED ON THE MANHOLE.

B. DEMO NOTES

1. PROTECTION OF THE VAULT WALLS AND EQUIPMENT SHALL OCCUR DURING THE REMOVAL OF THE VAULT COVER.

C. QUALITY ASSURANCE AND CONTROL

1. SUBMITTALS:

a. CONCRETE MIX DESIGN FOR EACH TYPE OF CONCRETE.
b. PRODUCT DATA FOR CONCRETE ADMIXTURES.
c. SHOP DRAWINGS FOR CONCRETE REINFORCING.

2. TESTING REQUIREMENTS:

a. CONCRETE:

i) COMPRESSIVE STRENGTH - ASTM C39, FOUR CYLINDERS FOR EACH TYPE OF CONCRETE FOR EVERY 50 YARDS EACH DAY.
ii) ONE SLUMP TEST FOR EACH TRUCK.
iii) ONE AIR TEST FOR EACH TRUCK.

b. OWNER TO PROVIDE AND PAY FOR ALL TESTING BY AN OWNER APPROVED TESTING FIRM. TESTING REPORTS SHALL BE SUBMITTED TO OWNER ON A WEEKLY BASIS.

CAST-IN-PLACE CONCRETE

A. MATERIAL PROPERTIES

CONCRETE PROPERTIES:

	f'c (PSI) 28 DAYS	EXPOSURE CATEGORY F	EXPOSURE CATEGORY S	MAX. SLUMP INCHES	MAX AGGR.	ENTR. AIR (%)	MAX. W/C
1. WALLS, SLAB:	4,500	F2	S2	4	3/4"	6	0.4

HIGH EARLY CONCRETE SHALL MEET COMPRESSIVE STRENGTHS OF 3500 PSI WITH 3 DAYS CURE PERIOD.

3 GAL/CY OF CALCIUM NITRATECORROSION INHIBITOR ADMIXTURE IN ACCORDANCE WITH ASTM 494 TYPE C TO BE ADDED TO THE VAULT COVER MIX DESIGN

2. REINFORCING PROPERTIES:

	FY (PSI)	ASTM
ALL BARS UNLESS NOTED OTHERWISE:	60,000	A615
TIES & STIRRUPS:	60,000	A615
EPOXY COATING:.	N/A	A775

ALL REINFORCING SHALL BE EPOXY COATED UNLESS NOTED OTHERWISE.

3. CHAIRS AND BOLSTERS SHALL BE PLASTIC OR EPOXY COATED.

4. IF CONCRETE SUPPORT BLOCKS ARE USED, THEIR STRENGTH SHALL BE EQUAL OR GREATER THAN THAT OF THE CONCRETE BEING PLACED.

5. THE FOLLOWING MATERIALS SHALL NOT EXCEED THE FOLLOWING PERCENT OF TOTAL CEMENTITIOUS MATERIAL BY WEIGHT:

FLY ASH:	15% SLABS, 25% ELSEWHERE
BLAST FURNACE SLAG:	15% IN SLABS, 50% ELSEWHERE
FLY ASH AND SLAG COMBINED:. . . .	15% IN SLABS, 50% ELSEWHERE
SOLUBLE CHLORIDE:	0.1%

6. CONCRETE COMPONENTS SHALL MEET THE FOLLOWING ASTM:

PORTLAND CEMENT: . . . . . C150, TYPE III
FINE AND COARSE AGGREGATES: C33
LIGHTWEIGHT AGGREGATES: C330
FLYASH: . . . . . .C618, CLASS C OR F
GROUND GRANULATED BLAST
FURNACE SLAG . . . . . .ASTM C989, GRADE 100 OR 120

AIR ENTRAINING ADMIXTURES: C260
OTHER CHEMICAL ADMIXTURES: . . . . . C494, TYPE A-G
WATER, CLEAN & NOT DETRIMENTAL TO CONCRETE: . . . . . N/A

B. CONCRETE NOTES

1. PERFORM WORK IN ACCORDANCE WITH ACI 301-11 AND ACI 318-11.

2. PROVIDE 3" MINIMUM CONCRETE COVER FOR REINFORCEMENT.

3. PROVIDE LAP SPLICES AT ALL CORNERS AND INTERSECTIONS, SAME SIZE AND SPACING AS HORIZONTAL REINFORCING.

4. PROVIDE SUPPORTS AND SPACERS FOR ALL REINFORCING, INCLUDING WWF.

5. ALL CONCRETE SHOWN SHALL BE REINFORCED. PLANS, SECTIONS AND DETAILS SHOWN WITHOUT REINFORCEMENT ARE INTENDED TO SHOW DIMENSIONS AND DETAILS OF CONSTRUCTION ONLY. REINFORCEMENT OF THESE SECTIONS SHALL BE PROVIDED IN ACCORDANCE WITH THE DETAILS SHOWING REINFORCEMENT.

6. LAP ALL SPLICES 48 BAR DIAMETERS UNLESS NOTED OTHERWISE.

7. CONSOLIDATE ALL CONCRETE, INCLUDING SLABS, BY VIBRATING.

8. MIX DESIGNS SHALL INCORPORATE ADMIXTURES AS APPROPRIATE FOR ENVIRONMENTAL CONDITIONS.

9. ALL REINFORCING SHALL BE DETAILED, FABRICATED & PLACED IN ACCORDANCE WITH ACI SP-66 (04), ACI DETAILING MANUAL - 2004, AND CRSI MANUAL OF STANDARD PRACTICE.

10. SUBMIT DESCRIPTION OF PLANNED PROTECTIVE MEASURES FOR HOT OR COLD WEATHER CONCRETING. HOT AND COLD WEATHER CONCRETING SHALL BE DONE IN ACCORDANCE WITH ACI 305R AND 306R RESPECTIVELY.

11. USE SONNEBORN 'KURE-N-SEAL W' CURING/SEALING/DUST-PROOFING COMPOUND OR APPROVED ALTERNATE ON ALL CONCRETE SLABS ON GRADE. CONTRACTOR SHALL VERIFY COMPATIBILITY WITH ALL PROPOSED FLOOR FINISHES AND FLOORING ADHESIVES. USE 7-DAY MOIST CURE WITH POLYETHYLENE WHEN COMPATIBILITY IS A CONCERN.

12. CONCRETE CLEAR COVER OVER REINFORCING STEEL SHALL MEET THE REQUIREMENTS OF ACI 318-11.

WORK TO BE DONE (1)

1. REMOVE EXISTING VAULT COVER.
2. DOWEL #6 BAR INTO CONCRETE WALLS WITH MINIMUM 8" EMBEDMENT USING HILTI RE-500-V3 ADHESIVE ANCHOR EPOXY.
3. FORM SLAB INCLUDING MANHOLE OPENING.
4. LAY REBAR ACCORDING TO REBAR LAYOUT PLAN.
5. USE 4500 PSI HIGH EARLY STRENGTH CONCRETE. VIBRATION TO CONSOLIDATE SLAB IS REQUIRED. APPLY SONNEBORN "KURE N' SEAL" TO THE TOP OF THE CONCRETE SLAB.
6. SMOOTH TROWEL FINISH.
7. REMOVE FORMS AND FILL ANY VOIDS WITH DRY PACK MORTER.
8. INSTALL 6 MIL POLY VAPOR BARRIER/BOND BREAK.
9. USE 4000 PSI HIGH EARLY CONCRETE TO MATCH EXISTING ROADWAY SURFACE.

KEY NOTES:

(1) SHALL BE INCLUDED FOR PAYMENT UNDER THE SINGLE LUMP SUM PAY ITEM, "REPAIR ELECTRICAL MANHOLE - 26".

I HEREBY CERTIFY that this plan, specification or report was prepared by me or under my direct supervision and that I am a duly Licensed Professional Engineer under the laws of the State of Minnesota.

JEREMY J. CLARKE — PRINTED NAME

SIGNATURE

02-23-17 — DATE

42422 — LIC. NO.

MICHIGAN ST. 3RD-1ST AVE WEST

LHB PROJECT NO. 160811

CITY PROJECT NO. 1601

CONSTRUCTION DETAILS

SHEET NO. 49 OF 49 SHEETS

PLOT DATE: 2/24/2017 9:45:33 AM FILE: R:\16Proj\160811\600 Drawings\C\160811_12.5_Construction Details_Vault-26.dwg