CITY OF DULUTH
INVITATION TO BID

PROJECT NAME/DESCRIPTION: **Demolition and Install of Generators**

BID NUMBER: **16-0307** **BID OPENING: April 6th, 2016 AT 2:00 PM**

PROJECT DESCRIPTION: Duluth Energy Systems intends on removing all three existing generators and replacing with one refurbished 1 MW unit that would be capable of providing Emergency Power to serve the entire plant.

PRE-BID MEETING: A **mandatory** pre-bid meeting will be conducted on March 31st, 2016 at 10 am at Duluth Energy Systems, 1 Lake Place Drive, Duluth, MN 55802. All interested bidders must attend. Contact Dan Cebelinski at 218-723-3601 with any pre-bid meeting questions.

QUESTIONS: Please submit any questions regarding this project via e-mail to purchasing@duluthmn.gov. Responses will be provided to all interested bidders as an addendum to this solicitation.

The selected contractor will be issued a construction contract (draft attached). Notice to Proceed will be issued once the agreement is fully executed.

Please note that the City of Duluth Supplemental Conditions apply to this project and will be included in the contract. This document can be found online at http://www.duluthgov.info/engineering/documents/SupplementalGenConditions4-15-11.pdf . Hard copies may be made available upon request.

Proposal forms, contract documents, plans and specifications are on file at the following offices: Duluth Builder's Exchange, Minnesota Builder's Exchange, BXWI-Fox Valley Plan Room, Blue Book Building and Construction Network, and Meda Construction Connection.

INSTRUCTIONS TO BIDDERS

All bids must be complete, signed, and transmitted in a sealed envelope plainly marked with the bid number, subject matter, and opening date. The City of Duluth reserves the right to split the award where there is a substantial savings to the City, to waive informalities and to reject any and all bids. Bidder must state in their proposal if bid price is based on acceptance of the total order. Do not include sales tax in the unit price. Price may not be the only consideration for bid award. Bids must be firm for a minimum of 60 days.

Bids must be received in Purchasing before 2:00 PM local time on the bid opening date specified on the Invitation for Bids. The City Purchasing Agent or her designee will conduct a public bid opening in Room 100 immediately following receipt of the bids.

No alternatives to the specification will be considered unless specifically requested. Erasures or other changes to the bid must be initialed and dated.

The following documents must be submitted with your bid:

1. **Bid Bond** - A certified check or bank draft, payable to the order of the City of Duluth, negotiable U.S. Government Bonds (at par value), or a satisfactory bid bond executed by the bidder and acceptable surety, in an amount equal to five per cent (5%) of the total bid. Bids may be withdrawn without forfeiture of surety if the request is submitted by the Bidder and received at the Purchasing Office in writing or by telephone prior to the scheduled bid opening.

2. **Acknowledgment of Addendum** (if applicable) – any changes to this solicitation will be announced via Addendum. A signature on the Bid Form acknowledging the Addendum(s) must be submitted with your bid.

3. **Responsible Contractor** - No construction contract in excess of $50,000 will be awarded unless the Bidder is a "responsible contractor" as defined in Minnesota Statute §16C.285, subdivision 3. All Bidders submitting a proposal for this project must verify that they meet the minimum criteria specified in the statute by submitting a Responsible Contractor Verification and Certification of Compliance form (attached). The owner or officer of the company must sign the form under oath verifying compliance with each of the minimum criteria. Making a false statement under oath will render the Bidder or subcontractor that makes the false statement ineligible to be awarded a construction project and may result in termination of a contract awarded to a Bidder or subcontractor that submits a false statement. Bidders must obtain verification of compliance from all subcontractors. Bidders must submit signed copies of verifications and certifications of compliance from subcontractors at the City's request.

Please note that the following requirements also apply to this project, and any additional required documents must be submitted prior to award/contract execution. Submitting these documents with your bid will assist in expediting the process.

1. **Insurance** – Contractor must provide proof of Public Liability and Automobile Liability Insurance with limits not less than $1,500,000 Single Limit prior to the commencement of work. The City of Duluth must be named as an additional insured. Please refer to the draft Contract, Section 7.

2. **Affidavit of Non-Collusion** – The successful bidder shall be required to execute the attached affidavit stating that he/she has not entered into a collusive agreement with any other person, firm, or corporation in regard to any bid submitted.

3. **Performance & Payment Bonds** – The awarded contractor will be required to submit performance and payments bonds in the full amount of the project cost prior to award.

4. **Affirmative Action/EEO** - The contractor must take affirmative action to ensure that the employees and applicants for employment are not discriminated against because of their race, color, creed, sex or national origin, and must meet the affirmative action goals. Contractors are encouraged to subcontract with Disadvantaged Business Enterprises (DBEs) when possible. A current list of certified DBEs is available on the Minnesota Unified Certification website at http://mnucp.metc.state.mn.us . Contractor will comply with all applicable Equal Employment Opportunity laws and regulations. Awarded contractor will

submit the attached Equal Employment Opportunity (EEO) Affirmative Action Policy Statement & Compliance Certificate.

5. **Out of State Contractor** - Unless a State of Minnesota Certificate of Exemption is provided, any out-of-state bidder receiving a bid award will have 8% retained from invoice payments on any contracts over $50,000. Submit a signed copy of the signed exemption form when submitting Payment and Performance Bonds. This form may be found at the following web address: http://www.revenue.state.mn.us/Forms_and_Instructions/sde.pdf

6. **Prevailing Wage** - Not less than the minimum salaries and prevailing wages as set forth in the contract documents must be paid on this project.

The City of Duluth is an Equal Opportunity Employer. Contractor shall comply with all applicable Equal Employment Opportunity laws and regulations.

CITY OF DULUTH

Andrew Field	Amanda Ashbach
Financial Analyst	Purchasing Agent

16-0307 Bid Form

Demolition and Install of Generators $ _____

Bid amount written out: _____

Acknowledgment of Addendum

Addendum 1:

Addendum 2:

Addendum 3:

Addendum 4:

Name and Title: _____

Vendor Name: _____

Address: _____

_____

Phone Number: _____

Email: _____

Signature: _____

Statement of Work

Duluth Energy Systems Project DUL-PLANT-16-04
Emergency Generator Installation
Duluth, MN 55802

1. Project Overview:

The Steam Plant has three existing emergency generators, one 900 kW unit that has been defunct for several years, one 400 kW and one 150 kW unit that are operational but in dire need of a complete overhaul. The two existing units that are operational do not have the capacity to power the baghouse ID fan. The Baghouse ID fan is critical to the pollution control equipment. Without the baghouse in operation the plant will not be within compliance of the MPCA air permit requirements.

Duluth Energy Systems intends on removing all three existing generators and replacing with one refurbished 1 MW unit that would be capable of providing Emergency Power to serve the entire plant.

2. Contract Documents

a. This Statement of Work and attached drawings and specifications comprises the technical requirements for this project:
b. Attached drawings and specifications E0.1, E1.1 and E1.2

3. Project Description:

a. Contractor shall install one 1 MW unit and disconnect two other units per the design drawings. The existing 900 kW unit is already disconnected and ready for removal. The three existing units including batteries and transfer switch will be removed by Power House Systems. The contractor shall also install new switchboard, transfer switch and rewire system as described on the plans, specifications and here within.

b. Specific tasks to be accomplished in this project are:
   1. Construct new service entrance:
      i. Directional bore both primary and secondary systems
      ii. Pour housekeeping pads for transformer and transfer switch
      iii. Install new switchboard and transfer switch
      iv. Connect new 1,000 KVA transformer provided by MN Power
      v. Coordinate final connections with MN Power

   2. Installation of new 1MW unit
      i. Rig unit onto existing housekeeping pad
      ii. Install remote annunciator panel, coordinate location with owner. Utilize existing cable and panel location in Control Room if applicable.
      iii. Wire unit per design drawings
      iv. Install muffler/silencer

3. Switch-over and power service shut downs
    i. Any required shut-downs to complete power shut-downs shall be coordinated with the owner a minimum of 7-days prior to work.
    ii. Any power outages that affect the boiler operation will require the use of a generator to back feed the boiler control system. The contractor shall be responsible for providing temporary power in order to maintain boiler operation. DES does have a small 7 kW portable generator that could be utilized if necessary.

4. Electrical Demolition
    i. Contractor shall be responsible for de-energizing and disconnecting existing 400 kW and 150 kW units and removing the associated ATS.
    ii. Contractor shall be responsible for removing existing 1000 KVA transformer and turning over to MN Power.
    iii. Abandonment of existing cabling is prohibited with the exception of the baghouse ID fan.

4. Material and Equipment Requirements:

a. With the exception of the material and labor listed in Section 4.b., the Contractor shall supply and include in his bid, the cost of all equipment, material and labor required to complete the project.

b. Material and labor to be provided by Duluth Energy Systems
    1. 1MW generator
    2. Exterior rated transfer switch
    3. Remote generator annunciator panel
    4. Demolition of water, exhaust and fuel piping systems to existing units
    5. Connection of fuel oil piping to new unit

c. Material, equipment and labor to be provided by Contractor:
    1. 2000A Switchboard and metering panel.
    2. Temporary generator and connection into boiler burner management system, if required.
    3. Rigging to move new generator into final location.

5. Project Schedule

Construction of new service entrance shall commence within 1-month of awarding contract. Final generator setting and connection to occur once proper permitting has been acquired by Duluth Energy Systems (TBD). Project to be completed within 120 days after award.

6. Bid Requirements

The following submissions are required:

a. Firm Fixed Price Bid for Scope of Work described in this document and its attachments.

b. Description of any proposed alternative configuration.

c. List of subcontractors and their respective roles in project.

d. Any other documents required by the City of Duluth.

LIGHTING

	MOUNTING HEIGHT
A — FIXTURE TYPE; 21 — CEILING OUTLET; SW — SWITCH; CIRCUIT NO.	
SW — SWITCH; A — FIXTURE TYPE; 21 — CIRCUIT NO.	
RECESSED OUTLET	
BRACKET FIXTURE	AS NOTED
LED FIXTURE	
BRACKET LED FIXTURE	AS NOTED
EXIT LIGHT FIXTURE; DENOTES WALL MOUNTED; DENOTES ARROW DIRECTION	
DENOTES NUMBER OF HEADS	
EBU — TWIN HEAD EMERGENCY BATTERY UNIT WITH LIGHTS, CHARGER AND BATTERY	
EBU-RC — EMERGENCY BATTERY UNIT WITH REMOTE CAPABILITY	
ELB — EMERGENCY LIGHT BATTERY WITH CHARGER	
ELRH — EMERGENCY LIGHT WITH SINGLE REMOTE HEAD	
ELRH — EMERGENCY LIGHT WITH DOUBLE REMOTE HEADS	

SWITCHES

SWITCH 1-POLE	48"
3 OR 4 — 3 OR 4 WAY SWITCH.	48"
SWITCH & PILOT	48"
DIMMER SWITCH (SIZE AS REQUIRED)	48"
K — KEY SWITCH	48"
OS — OCCUPANCY SENSOR - CEILING TYPE	
OS — OCCUPANCY SENSOR - WALL TYPE	48"
TC — TIME CLOCK	

NOTE: MOUNT SWITCHES AT 46" A.F.F. IN BLOCK COURSE WALLS.

RECEPTACLES

DUPLEX RECEPTACLE	18" OR AS NOTED
AC — DUPLEX RECEPTACLE, ABOVE COUNTER	
DOUBLE DUPLEX RECEPTACLE	"
GFI — GROUND FAULT INTERRUPTER DUPLEX RECEPTACLE (FEED THRU TYPE)	"
WP — WEATHERPROOF GFI RECEPTACLE	"

NOTE: MOUNT OUTLETS AT 16" A.F.F. IN BLOCK COURSE WALLS.
NOTE: MOUNT OUTLETS ABOVE BASEBOARD RADIATION AT 24".

AS NOTED

MOTORS

MOTOR OUTLET - SEE SCHEDULE (REFER TO MECHANICAL DRAWINGS FOR EXACT LOCATIONS)	48"
STARTER	48"
LOCKABLE DISCONNECT SWITCH	48"
COMBINATION STARTER DISCONNECT	AS NOTED

OTHERS

SPECIAL PURPOSE OUTLET	
JUNCTION BOX	

SIGNALS

TELEPHONE	18" OR AS NOTED
W — TELEPHONE - WALL MOUNTED	48"
TELEPHONE FLOOR OUTLET	
COMBINATION TELEPHONE/DATA OUTLET	18" OR AS NOTED
WAP — WIRELESS ACCESS POINT	

SECURITY

CR — CARD READER	48"

REFERENCE INDICATION

1 — SEE NOTE INDICATED BY NUMBER

R — REVISION

ELECTRICAL GENERAL NOTES:

A. PROVIDE CABLE OR CONDUIT AND WIRE AS REQUIRED TO ACHIEVE CIRCUITING SHOWN. SIZE CONDUCTORS PER NEC CAPACITY AND WIRE FILL CRITERIA. PROVIDE DEDICATED NEUTRAL AND GROUND CONDUCTORS FOR ALL CIRCUITING CU (UNO). INCREASE BRANCH CIRCUIT CONDUCTORS INCLUDING EQUIPMENT GROUNDING CONDUCTORS PROPORTIONALLY FOR NO MORE THAN 3% VOLTAGE DROP PER NEC 210.

B. IT IS THE INTENT OF THESE DIAGRAMMATIC DESIGN BUILD/ASSIST DRAWINGS TO PROVIDE THE PROJECT SCOPE INCLUDING BUT NOT LIMITED TO PHASED DEMOLITION AND NEW CONSTRUCTION. EXISTING INFORMATION INDICATED ON THESE PLANS DOES NOT REPRESENT ALL EXISTING CONDITIONS THIS CONTRACTOR SHALL BECOME FAMILIAR WITH EXISTING CONDITIONS, SCOPE OF PHASING, AND PROJECT INTENT PRIOR TO BID SUBMISSION. NO EXTRA WILL BE ALLOWED DUE TO THE LACK OF KNOWLEDGE OF EXISTING CONDITIONS.

C. PERFORM WORK TO COMPLY WITH THE STANDARD PRACTICES FOR GOOD WORKMANSHIP PUBLISHED BY NATIONAL ELECTRICAL CONTRACTORS ASSOCIATION (NECA). COMPLY WITH THE LATEST ENFORCED EDITION OF THE NATIONAL ELECTRICAL CODE (NEC), LOCAL CODES, AMENDMENTS, AND ORDINANCES.

D. PROVIDE CUTTING, PATCHING AND RESTORATION OF FINISHES NECESSARY FOR THIS WORK. SURFACES DAMAGED BY THIS WORK AND SPACES AROUND CONDUITS PASSING THROUGH FLOORS AND WALLS SHALL BE NEATLY PATCHED AND FINISHED TO MATCH EXISTING. STRUCTURAL MEMBERS SHALL NOT BE CUT OR PENETRATED IN ANY MANNER. THE SPACES AROUND THE CONDUITS SHALL BE SEALED TO PREVENT ENTRANCE OF MOISTURE. PROVIDE FIRE STOPPING PER UL APPROVED METHODS.

E. COOPERATE WITH OWNER'S EQUIPMENT PROVIDER FOR PROPER INSTALLATION OF EQUIPMENT. COORDINATE THE MANUFACTURER' S REQUIREMENTS TO AVOID CONFLICTS WITH EQUIPMENT, ETC. CONFLICTS SHALL BE RESOLVED PRIOR TO ROUGH-IN AND AT NO ADDITIONAL COST TO THE OWNER.

F. PROVIDE POWER WIRING AND CONNECT TO EACH ITEM OF EQUIPMENT FURNISHED BY OWNER AND OTHER TRADES AS SHOWN ON THE DRAWINGS. VERIFY ROUGH-IN REQUIREMENTS FOR EACH ITEM. FURNISH AND INSTALL MINOR ITEMS WHICH ARE OBVIOUSLY AND REASONABLY NECESSARY FOR COMPLETION.

G. LEAVE THE SITE CLEAN AND READY FOR OCCUPANCY. REMOVE DIRT, DEBRIS, EMPTY CARTONS, TOOLS, CONDUIT AND WIRE SCRAPS AND MISCELLANEOUS SPARE EQUIPMENT AND MATERIALS USED IN THIS DIVISION OF THE WORK DURING CONSTRUCTION. COMPONENTS SHALL BE FREE OF DUST, GRIT AND FOREIGN MATERIALS AND LEFT AS NEW BEFORE FINAL ACCEPTANCE OF WORK.

H. PROVIDE NECESSARY DEMOLITION TO FACILITATE NEW CONSTRUCTION WORK ASSOCIATED WITH THIS PROJECT. COORDINATE ALL OUTAGES WITH OWNER MINIMUM SEVEN (7) DAYS IN ADVANCE. OWNER RETAINS RIGHT TO FIRST SALVAGE. PROVIDE DISPOSAL OF ALL REMOVED MATERIAL. MAINTAIN CIRCUIT CONTINUITY AS REQUIRED.

1. ALL OF THE SYMBOLS AND ABBREVIATIONS SHOWN ON THIS SHEET MAY OR MAY NOT BE USED IN THIS SET OF DRAWINGS.

J. COORDINATE WORK IN PHASES WITH GENERAL CONTRACTOR(S) AND OWNER TO FACILITATE DEMOLITION AND NEW CONSTRUCTION.

K. REMOVE ALL ELECTRICAL RELATED EQUIPMENT (I.E. JUNCTION BOXES, RECEPTACLES, SWITCHES DEVICES, ETC.) AFFECTED/ABANDONED AS A RESULT OF DEMOLITION AND NEW CONSTRUCTION.

L. IT IS THE RESPONSIBILITY OF THIS CONTRACTOR TO FIELD COORDINATE ALL FINAL MECHANICAL AND EQUIPMENT LOCATIONS ALONG WITH CONNECTION REQUIREMENTS AND CONTROL WIRING PRIOR TO ROUGH-IN. ADJUST CORRESPONDING CIRCUIT BREAKER RATINGS AND BRANCH CIRCUITING ACCORDINGLY.

M. MATERIALS FURNISHED FOR THIS PROJECT SHALL BE NEW, COMMERCIAL GRADE, FREE OF DEFECTS, AND LISTED BY A NATIONALLY RECOGNIZED TESTING LABORATORY UNO.

N. PROVIDE COMPLETE O&M MANUAL INCLUDING APPROVED SUBMITTAL DRAWINGS WARRANTY INFORMATION FOR ALL PRODUCT SUPPLIED, AND MANUFACTURERS OPERATION AND MAINTENANCE INSTRUCTIONS.

O. PROVIDE ELECTRONIC MANUFACTURES SUBMITTAL DRAWINGS FOR APPROVAL PRIOR TO RELEASE, ASSOCIATED WITH THE FOLLOWING: POWER DISTRIBUTION EQUIPMENT..

P. REMOVE ALL ABANDONED WIRING. AT CONTRACTOR'S OPTION, UTILIZE EXISTING ABANDONED RACEWAY TO EXTENT AVAILABLE. ALL ABANDONED EXPOSED RACEWAY SHALL BE REMOVED.

Q. ELECTRICAL WORK SHALL BE PERFORMED UNDER THE SUPERVISION OF A LICENSED MASTER ELECTRICIAN. PROCURE PERMITS AND LICENSES AND PAY FEES ASSOCIATED WITH THIS WORK.

R. NOTE EQUIPMENT INDICATED ON PLAN AS "OWNER FURNISHED" IS SUPPLIED BY POWER HOUSE SYSTEMS, LLC. THIS CONTRACTOR SHALL COORDINATE WITH JERRY RICKE @ 1-952-471-3030 AS REQUIRED TO FACILITATE WORK INDICATED ON PLAN.

SYMBOLS FOR SITE PLAN

PP — POWER POLE	
LIGHTING STANDARD	
OHP — OVERHEAD POWER LINE	
UGP — UNDERGROUND PRIMARY	
UGS — UNDERGROUND SECONDARY	
UGT — UNDERGROUND TELEPHONE	

PANEL DESIGNATION SYSTEM

L3N–101
① ② ③ ④ ⑤

① L = LIGHTING
P = POWER
D = DISTRIBUTION
S = MAIN PANELBOARD
M = MOTOR CONTROL CENTER
R = RELAY PANEL

② 1 = 120/240V-/10
2 = 240/3Ø
3 = 120/208V–3Ø
4 = 277/480V–3Ø
5 = –SPECIAL–

③ N = NORMAL POWER SOURCE
E = EMERGENCY POWER SOURCE
U = UNINTERRUPTIBLE POWER SOURCE

④ B = BASEMENT FLOOR
G = GROUND FLOOR
1 = FIRST FLOOR
2 = SECOND FLOOR
ETC.

⑤ 01 = PANELBOARD #1
02 = PANELBOARD #2
03 = PANELBOARD #3
ETC.

ABBREVIATIONS

EM- EMERGENCY	MP - MINNESOTA POWER
N - NORMAL	XFRM - TRANSFORMER
EX - EXISTING	ATS - AUTOMATIC TRANSFER SWITCH
SWBD - SWITCHBOARD	MCC - MOTOR CONTROL CENTER
MV - MEDIUM VOLTAGE	

NOTE:
ALL OF THE SYMBOLS AND ABBREVIATIONS SHOWN ON THIS SHEET MAY OR MAY NOT BE USED IN THIS SET OF DRAWINGS

INDEX OF ELECTRICAL DRAWINGS

E0.0 ELECTRICAL TITLE SHEET
E1.1 ELECTRICAL PLANS AND DETAILS
E2.1 ELECTRICAL PLAN FIRST FLOOR REVISED

DIVISION 26, 27 & 28 - ELECTRICAL WORK

SECTION 26 0500 - BASIC MATERIALS AND METHODS

A. SEQUENCING AND SCHEDULING

1. COORDINATE THE INSTALLATION OF ELECTRICAL WORK WITH OWNERS SCHEDULE , OPERATING HOURS AND OWNER FURNISHED EQUIPMENT REQUIREMENTS. REFER TO PROPOSED PHASING SCHEDULE ON SHEET E1.1.

B. WIRE AND CABLE

1. PROVIDE COPPER CONDUCTORS FOR NEW SERVICE ENTRANCE FEEDERS, AND BRANCH CIRCUITS. ALUMINUM CONDUCTORS ARE NOT ALLOWED. THHN OR THWN INSULATION. MINIMUM #12 AWG SIZE. SOLID CONDUCTORS FOR SIZES SMALLER THAN #8 AWG, STRANDED FOR #8 AWG AND LARGER.

C. CONDUIT AND BOXES

1. INSTALL ABOVE FLOOR INTERIOR CONDUCTORS IN EMT, UNO. PROVIDE STEEL SET SCREW CONNECTORS AND COUPLINGS.

2. SECURELY FASTEN CONDUIT AND RACEWAYS WITH STEEL STRAPS, CLAMPS, AND HANGERS WITH SUITABLE FASTENERS. TIE WIRES SHALL NOT BE USED.

3. OUTLET BOXES SHALL BE OF TYPE SUITABLE TO THEIR USE, AND OF SIZE REQUIRED BY CODE. THEY SHALL BE GALVANIZED STEEL, EXCEPT THOSE EXPOSED TO WEATHER SHALL BE CAST ALLOY WITH A GASKET.

4. RACEWAYS SHALL BE EXPOSED IN EMT THE BUILDING AREA.

5. RACEWAY SYSTEMS INSTALLED OUTSIDE SHALL BE RIGID HEAVY WALL. PVC WITH RIGID STEEL TRANSITION ELBOWS TO RIGID STEEL EXPOSED IN SIZES INDICATED ON PLAN AS REQUIRED BY NEC.

D. IDENTIFICATION

1. SWITCHBOARDS AND RELATED FEEDER BREAKERS SHALL BE IDENTIFIED WITH ENGRAVED PLASTIC PLATES (WHITE LETTERS BLACK PLATE).

2. CONDUCTORS SHALL BE COLOR CODED PER NEC. AT TERMINATION MATCHING EXISTING SYSTEMS.

SECTION 26 2416 - SWITCHBOARDS

A. PROVIDE SWITCHBOARDS WITH SWITCHING AND OVERCURRENT PROTECTIVE DEVICES IN QUANTITIES, RATINGS, TYPES, AND ARRANGEMENTS SHOWN. EQUIP WITH COPPER BUS BARS, FULL-SIZED NEUTRAL BAR AND GROUND BUS.

B. PANELBOARDS SHALL BE AS MANUFACTURED BY EATON CUTLER HAMMER, OR PRE-APPROVED EQUIVALENT.

C. PROVIDE OWNER METERING WITH CT'S , DISPLAY AND GATEWAY CARD FOR REMOTE MONITORING .(COMMUNICATION CABLE BY OWNER) AS MANUFACTURED BY EATON CUTLER-HAMMER MODEL # PXM2270.OR PRE-APPROVED EQUIVALENT.

D. PROVIDE NEW TYPED CIRCUIT BOARD DIRECTORIES TO REFLECT REMODEL CONDITIONS. CIRCUITS NOT AFFECTED BY DEMOLITION BUT SUBJECT TO REUSED ROOM DESCRIPTION ARE ALSO INCLUDED. FIELD VERIFY DURING CONSTRUCTION PHASE AND ADJUST ACCORDINGLY.

E. PROVIDE INTEGRALLY PANEL MOUNTED TVSS IN NEW SERVICE SWITCHBOARD S4E-100 CONNECTED VIA DEDICATED THREE-POLE CIRCUIT BREAKER AS MANUFACTURED BY EATON CUTLER-HAMMER MODEL # SPD 200 480Y3K WITH DISPLAY STANDARD AND SURGE COUNTER OR PRE-APPROVED EQUIVALENT.

SECTION 26 2726 - WIRING DEVICES

A. WIRING DEVICES SHALL BE SPECIFICATION GRADE, SIDE-WIRED, 20 AMP, HUBBELL 1221 SERIES SWITCHES, HUBBELL 5352 SERIES RECEPTACLES, HUBBELL 8300 SERIES GFCI RECEPTACLES, OR EQUIVALENT.

B. DEVICE PLATES SHALL BE GALVANIZED WITH WP IN-USE COVER PLATE.

SECTION 26 5100 - LIGHTING FIXTURES

PART 1 - GENERAL

A. FURNISH AND INSTALL A LIGHTING FIXTURE OF TYPE INDICATED, FOR EACH LIGHTING OUTLET, AND FOR EACH FIXTURE INDICATED.

B. WHERE A FIXTURE TYPE IS DESCRIBED IN WORDS, AND ALSO BY CATALOG NUMBER, IF THE WORD DESCRIPTION AND CATALOG NUMBER ARE IN CONFLICT, THE WORD DESCRIPTION SHALL GOVERN.

C. ALL FIXTURES SHALL HAVE A UL LABEL. THOSE TO BE INSTALLED OUTDOOR, AND IN OTHER WET OR DAMP LOCATIONS, SHALL HAVE AN UNDERWRITERS LABEL FOR SUCH SERVICE.

Revisions

Date 03/01/2016
Drawn KJD / MJJS
Checked SLH
Proj. No. 84280

I hereby certify that this plan was prepared by me, or under my direct supervision, and that I am a duly registered Professional Engineer under the laws of the State of Minnesota.
DAVE T. BLUME
Date 03/01/2016
Reg. No. 24671

Gausman & Moore
Mechanical and Electrical Engineers
501 SOUTH LAKE AVE
SUITE 310
DULUTH MINNESOTA, 55802
(218) 722-2565 FAX 722-9306
Project No. 84280

ELECTRICAL TITLE SHEET

DULUTH ENERGY SYSTEMS

DULUTH ENERGY SYSTEMS GENERATOR REPLACEMENT
1 LAKE PLACE DRIVE
DULUTH, MN 55802

E0.1

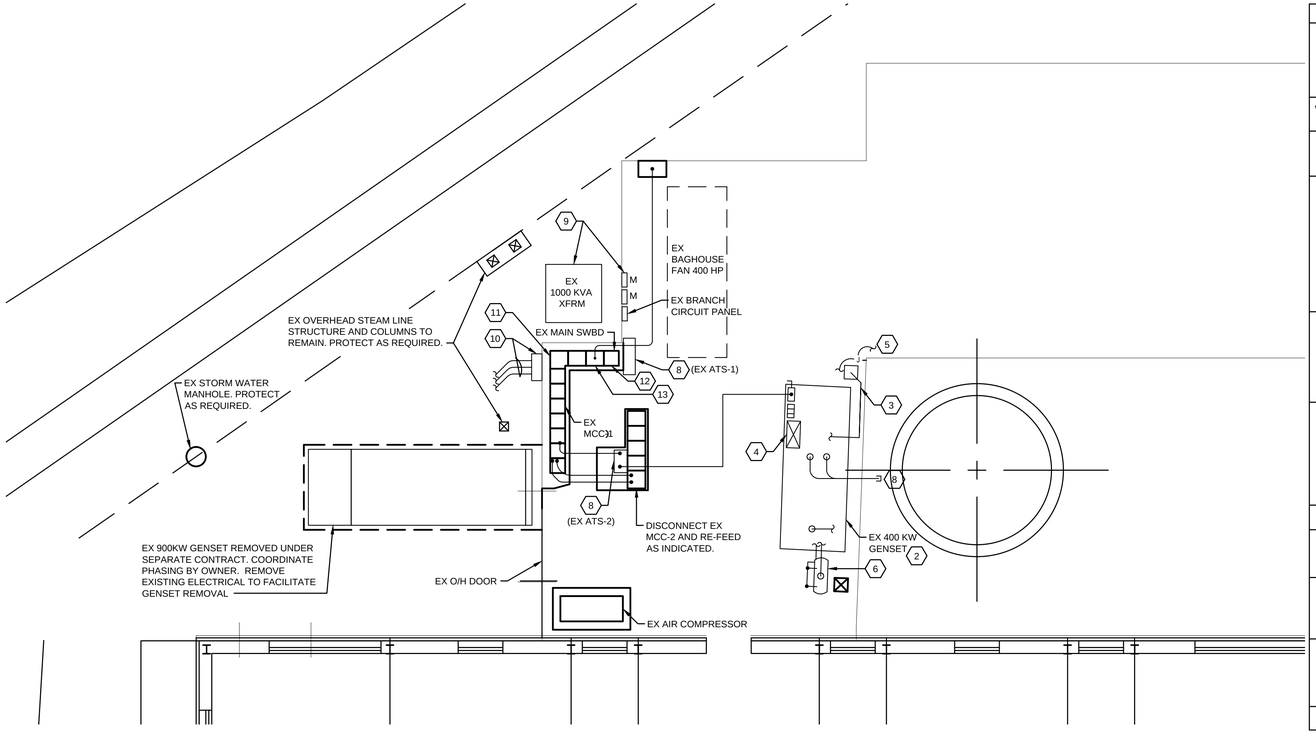

1 ELECTRICAL PLAN - PARTIAL FIRST FLOOR - EXISTING

SCALE: 0' 8'

PLAN NORTH

PROPOSED PROJECT PHASING PLAN		
IT IS THE INTENT OF THIS PROPOSED PHASING PLAN TO PROVIDE SEQUENCE OF PROJECT MEETING OWNER'S REQUIREMENTS. NOTE: THIS FACILITY OPERATES 24/7 - 365. ALL SERVICE SHUT DOWNS PROPOSED AND/OR REQUIRED TO FACILITATE WORK MUST BE APPROVED IN WRITING BY OWNER MINIMUM OF 7 CALENDAR DAYS IN ADVANCE.		
WORK TASK	TIME DURATION	DISCRIPTION
A	N/A	EXISTING 900KVA EXTERIOR GENSET REMOVED BY OWNER. THIS CONTRACT DISCONNECTS EXISTING CONDUIT SYSTEM AS REQUIRED TO FACILITATE REMOVAL BY POWER HOUSE SYSTEMS. NEW 1000KVA GENSET AND SERVICE RATED TRANSFER SWITCH WILL BE DELIVERED AND SET IN STAGING AREA IDENTIFIED ON PLAN
B	N/A	CONSTRUCT NEW SERVICE ENTRANCE SYSTEM INCLUDING BUT NOT LIMITED TO: REMOVAL OF EXISTING EXTERIOR BUILDING MOUNTED PULL BOX; DIRECTIONAL BORING FOR BOTH PRIMARY AND SECONDARY SYSTEMS; POURING OF NEW CONCRETE HOUSEKEEPING PADS FOR TRANSFORMER, CONNECTION CABINET, NEW ATS, AND NEW INTERIOR SWITCHBOARD S4E-100; COORDINATION WITH MNPWR FOR NEW PRIMARY INSTALLATION; INSTALLATION OF NEW SECONDARY SERVICE ENTRANCE AND FEEDER TO S4E-100; INSTALL NEW BACKFEEDS FOR EXISTING 1000A GEAR LINE-UP, 400HP BAGHOUSE FAN, AND MCC-2 FROM NEW SWITCHBOARD S4E-100 AND EXTEND TO APPROXIMATE BACKFEED TERMINATION LOCATION. FINAL EXTENSION AND TERMINATIONS COMPLETED DURING FORTHCOMING NORMAL POWER SHUT DOWN(S); AND ACTIVATION OF NEW SERVICE AFTER INSPECTION BY LOCAL AHJ
C	N/A	INSTALL NEW 1000KW GENSET AND SERVICE RATED TRANSFER SWITCH STAGED ON-SITE. THIS INCLUDES BUT IS NOT LIMITED TO REMOTE ANNUNCIATOR INSTALLATION, MUFFLER / SILENCER INSTALLATION, COORDINATE FOR OWNER FUELING, TESTING OF SYSTEM INCLUDING NEW TRANSFER SWITCH PER NFPA REQUIREMENTS WITH POWER HOUSE SYSTEM SUPPORT. PROVIDE WRITTEN DOCUMENTATION INCLUDING INSPECTION SIGN-OFF TO OWNER FOR CONFIRMATION SYSTEM IS READY FOR ACTIVATION.
D	3 HOURS	NORMAL POWER SERVICE SHUT DOWN #1: ACTIVATE EXISTING 400KW GENSET FOR OPERATION DURING THIS SHUTDOWN VIA EXISTING ATS-2. COORDINATE WITH MN PWR AND SHUT DOWN EXISTING TRANSFORMER PRIMARY; DISCONNECT AND REMOVE EXISTING SERVICE ENTRANCE CONDUCTORS VIA EXISTING TRANSFER SWITCH ATS-1 TO EXISTING 1000A GEAR LINEUP. TERMINATE NEW FEEDER FROM S4E-100; DISCONNECT AND PULL BACK EXISTING CONDUCTORS ASSOCIATED 400HP BAGHOUSE FAN AND TERMINATE NEW FEEDER. ACTIVATE NEW NORMAL POWER SERVICE AND SHUT DOWN EXISTING 400KW GENSET.
E	N/A	REMOVE EXISTING 1000KVA OWNER TRANSFORMER, EXISTING SERVICE TRANSFER SWITCH (ATS-1), AND EXISTING METERING.
F	1 HOUR. NOTE THIS SHUTDOWN WILL INCLUDE ENTIRE STEAM PLANT	NORMAL POWER SERVICE SHUT DOWN #2: SHUT DOWN EXISTING 1000A GEAR LINE-UP VIA NEW CB IN S4E-100; DISCONNECT EXISTING MCC-2 FEEDER TAP FROM MCC-1 SECTION; DISCONNECT EXISTING ATS-3 AND REVISE CONNECTIONS TO BY-PASS COMPLETELY; RESTORE POWER TO EXISTING 1000A GEAR LINE-UP.
G	2 HOURS. NOTE THIS WILL BE A CONTINUED SHUT DOWN OF MCC-2 STARTED DURING NORMAL POWER SHUT DOWN #2 UNDER TASK F ABOVE	REMOVE EXISTING ATS-2 AND ALL RELATED CONDUCTORS AND CONDUIT. COMPLETE TERMINATIONS TO EXISTING MCC-2 PREPARED DURING TASK B ABOVE AND ACTIVATE NEW FEED.
H	N/A	COMPLETE ELECTRICAL DEMOLITION FOR BOTH 400KW AND 150 KW GENSETS WITH REMOVAL OF EXISTING ATS-3 COMPONENTS. COORDINATE WITH OWNER FOR RELATED DEMOLITION OF WATER, EXHAUST, AND FUEL PIPING SYSTEMS. GATHER RELATED COMPONENTS INCLUDING BATTERIES, TRANSFER SWITCHES, AND GENERATORS FOR PICK UP BY POWER HOUSE SYSTEMS. COORDINATE WITH POWER HOUSE SYSTEMS FOR SCHEDULED PICK UP.
I	N/A	COMPLETE FINAL PROJECT CLEAN UP, TURN OVER AS-CONSTRUCTED DOCUMENTS, AND REQUEST FINAL INSPECTION BY OWNER.

NUMBERED NOTES:

1. REMOVE EXISTING TRANSFER SWITCH COMPONENTS TO FACILITATE GENERATOR REMOVAL. EXISTING DISTRIBUTION SWITCHBOARD TO REMAIN.
2. EXISTING GENSET REMOVED FROM SITE UNDER SEPARATE CONTRACT. DISCONNECT AND REMOVE EXISTING ELECTRICAL TO FACILITATE.
3. EXISTING FUEL TANK DISCONNECTED BY OWNER AND TURNED OVER TO POWERHOUSE SYSTEMS.
4. DISCONNECT EXISTING 24V BATTERY SYSTEM TO FACILITATE GENERATOR REMOVAL. TURN BATTERIES OVER TO POWERHOUSE SYSTEMS.
5. REMOVE EXISTING BRANCH CIRCUITS AND ASSOCIATED RACEWAY SYSTEMS COMPLETE TO FACILITATE GENERATOR REMOVAL.
6. EXISTING EXPANSION TANK AND RELATED WATER PIPING REMOVAL BY OWNER.
7. EXHAUST SYSTEM REMOVAL AND WALL PATCH BY OWNER. OBTAIN EXHAUST SYSTEM COMPONENTS REMOVED BY OWNER AND TURN OVER TO POWER HOUSE SYSTEMS.
8. REMOVE EXISTING SERVICE AUTOMATIC TRANSFER SWITCH AND TURN OVER TO POWERHOUSE SYSTEMS. COORDINATE CONDUCTOR DISCONNECT AND REMOVAL. WITH MAIN SERVICE SHUT DOWN, AND BACKFEED.
9. REMOVE EXISTING OWNER 1000 KVA TRANSFORMER AND RELATED METERING EQUIPMENT AFTER NEW SERVICE AND BACKFEEDS ARE COMPLETED. COORDINATE WITH MN POWER FOR PRIMARY DISCONNECT. ABANDON CONCRETE HK PAD AND PRIMARY IN PLACE. REMOVE SECONDARY CONDUCTORS COMPLETE. PROVIDE CONCRETE IN-FILL FOR SLEEVE OPENING FLUSH WITH EXISTING SURFACE.
10. REMOVE ABANDONED RACEWAY AND EXISTING PULL BOX. SALVAGE NEMA 3R PULL BOX FOR POSSIBLE RE-USE AT CONTRACTORS DISCRETION. REFER TO SHEET E1.2 FOR NEW REQUIREMENTS .
11. REMOVE EXISTING ABANDONED GUTTER SYSTEM LOCATED ON TOP OF GEAR LINE UP.
12. EXISTING 1000A MAIN SERVICE OCP WITH 1600A FUSIBLE SECTION BELOW. REMOVE ASSEMBLY AND PROVIDE LUGS AS REQUIRED TO FACILITATE BACKFEED AS INDICATED.
13. EXISTING STARTER SECTION/ ASSEMBLY ASSOCIATED WITH 400HP BAG HOUSE FAN. LOCK IN OFF POSITION AND ABANDON IN PLACE AFTER NEW BACKFEED IS COMPLETED. DISCONNECT EXISTING CONDUCTORS AT LOAD AND PULL BACK AND COIL IN NEW PULL BOX ABOVE FOR FUTURE RE-USE. DISCONNECT CONDUCTORS FROM STARTER, CAP ENDS, SECURE AND LABEL AS SPARE.
14. DISCONNECT BONDING JUMPER BETWEEN "N" AND "G" BUS. EXISTING GEAR LINEUP WILL NO LONGER BE AT SERVICE ENTRANCE.

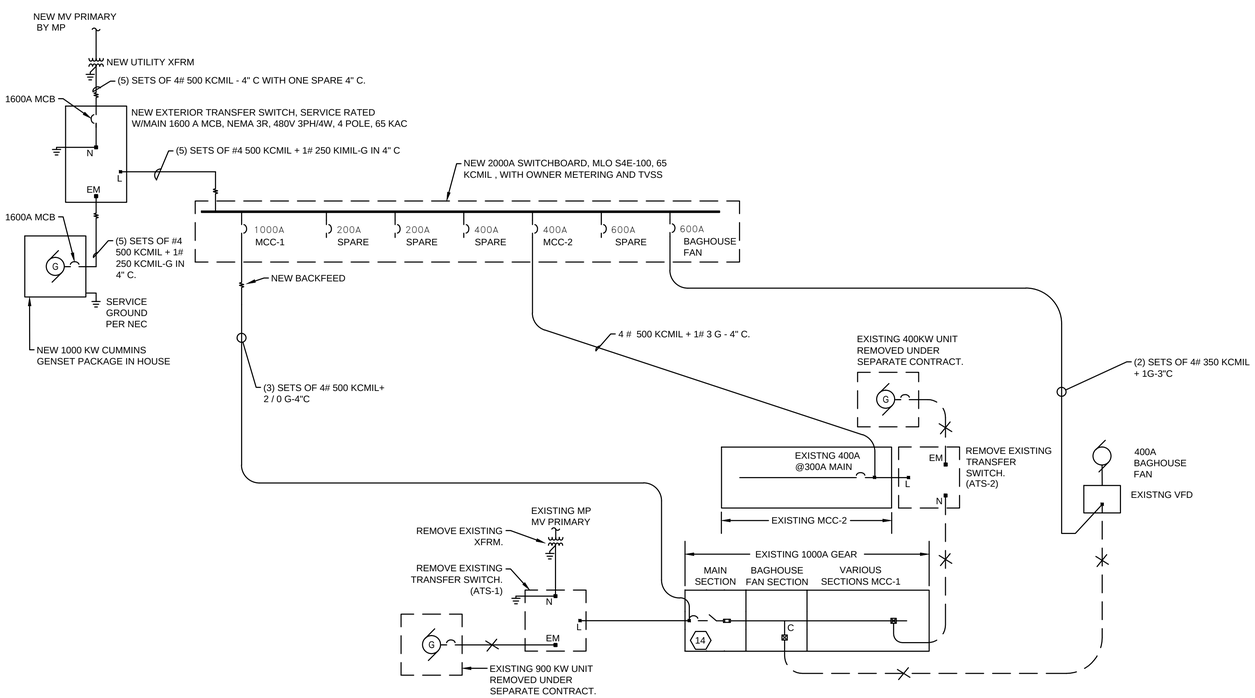

2 PARTIAL ONE-LINE POWER DIAGRAM

NO SCALE

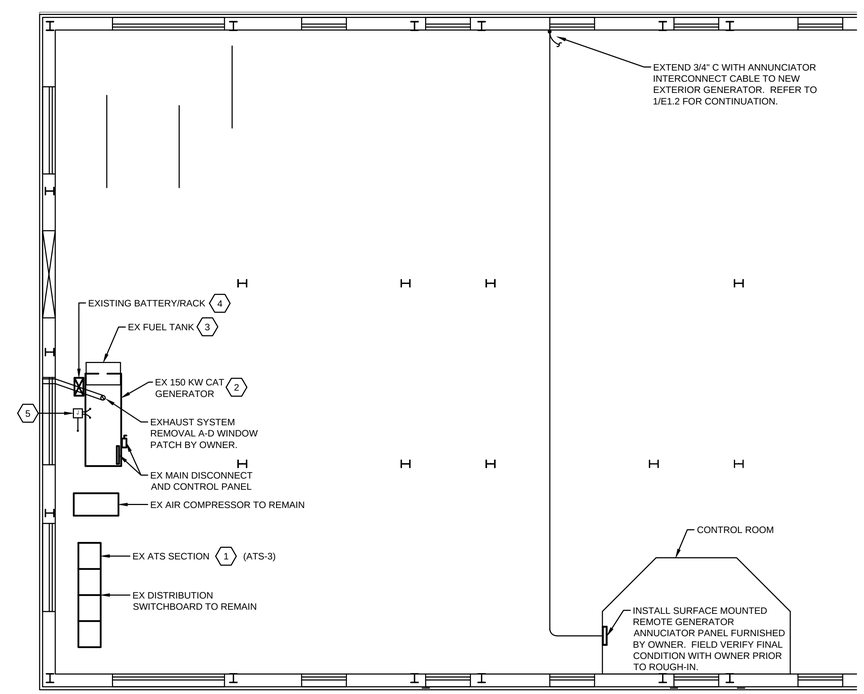

1 ELECTRICAL PLAN - PARTIAL 2ND FLOOR - EXISTING

SCALE: 0' 8'

PLAN NORTH

Revisions

Date 03/01/2016 Drawn KJD / MJS Checked SLH Proj. No. 84280

I hereby certify that this plan was prepared by me, or under my direct supervision, and that I am a duly registered Professional Engineer under the laws of the State of Minnesota.

DAVE T. BLUME

Reg.No. 24677 Date 03/01/2016

Gausman & Moore
Mechanical and Electrical Engineers
501 SOUTH LAKE AVE
SUITE 310
DULUTH MINNESOTA, 55802
(218)722-2555 FAX 722-9306
Project No. 84280

ELECTRICAL PLANS AND DETAILS

DULUTH ENERGY SYSTEMS

DULUTH ENERGY SYSTEMS GENERATOR REPLACEMENT

1 LAKE PLACE DRIVE
DULUTH, MN 55802

E1.1

2 OF 3

NUMBERED NOTES:

1. PROVIDE 3/4"C FROM GENERATOR CONTROL PANEL TO 2ND FLOOR CONTROL ROOM WITH INTERCONNECT CABLE FOR REMOTE GENERATOR CONTROL PANEL.
2. PROVIDE 120V, 20A/1P BRANCH CIRCUIT FROM MCC-2 PANEL FOR GENSET HOUSE LIGHTING AND SERVICE RECEPTACLES.
3. PROVIDE 120V, 20A/1P CONNECTION TO BATTERY CHARGER SYSTEM FROM MCC-2 PANEL.
4. PROVIDE CONNECTION TO BLOCK HEATER FROM MCC-2 PANEL. COORDINATE EXACT SIZE AND VOLTAGE REQUIREMENTS WITH ACTUAL UNIT FURNISHED. FOR BIDDING PURPOSES CONTRACTOR SHALL ASSUME 6KW, 208V, 1 PHASE, 40A/2P WITH 2#8+G - 3/4"C.
5. PROVIDE 4' SURFACE MOUNTED LED STRIP LIGHT FIXTURE AS MANUFACTURED BY LITHONIA #ZL1N-L48-5000LM-MVOLT-40K-FST-WH OR APPROVED EQUIVALENT. SURFACE MOUNT FIXTURE INSIDE GENSET HOUSING ON ROOF STRUCTURE AND LOCATION FOR OPTIMUM COVERAGE.
6. INSTALL SALVAGED PULL BOX TO FACILITATE NEW 1600A FEEDER INSTALLATION.

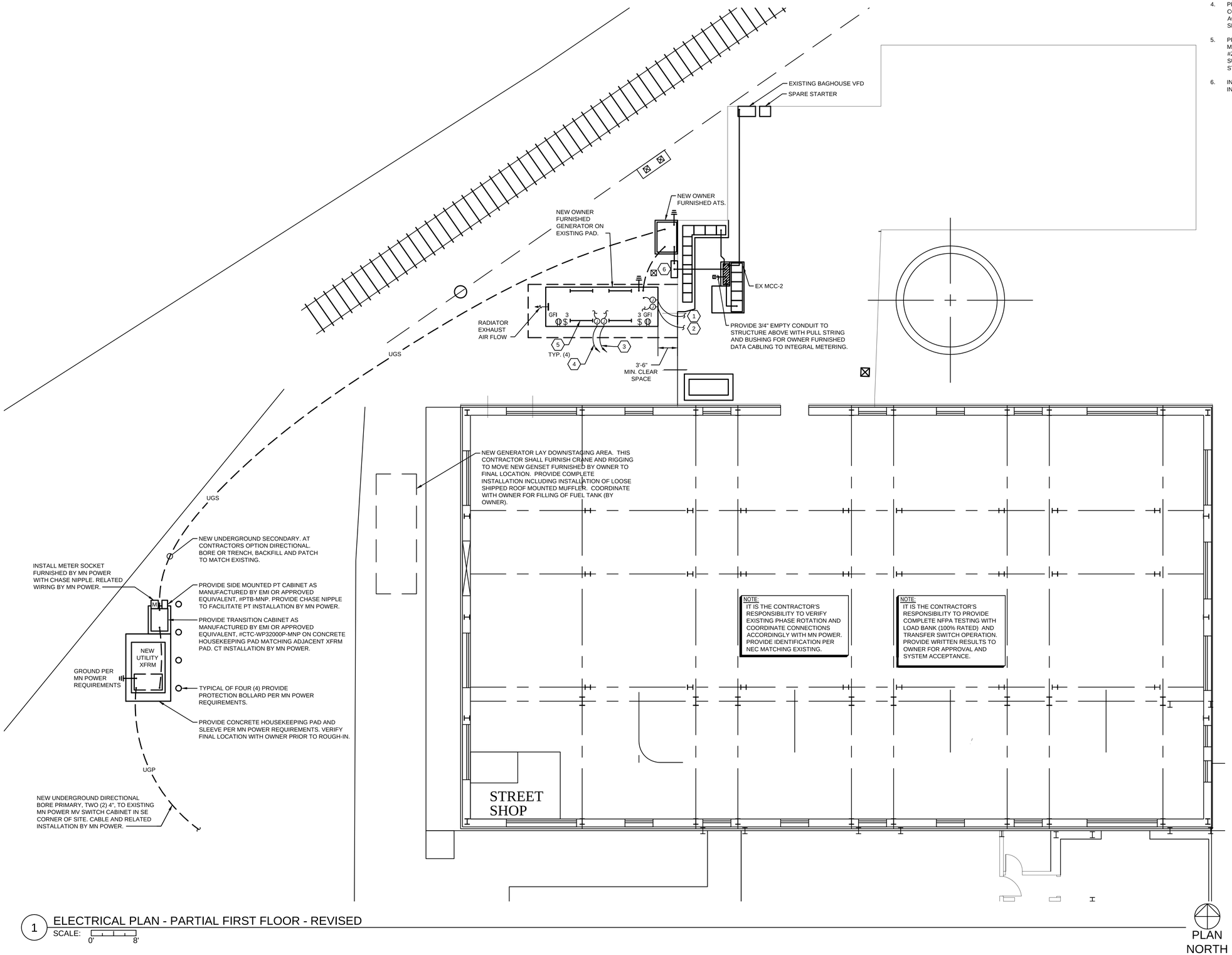

1 ELECTRICAL PLAN - PARTIAL FIRST FLOOR - REVISED

SCALE: 0' 8'

Revisions

Date 03/01/2016
Drawn KJD / MJS
Checked SLH
Proj. No. 84280

I hereby certify that this plan was prepared by me, or under my direct supervision, and that I am a duly registered Professional Engineer under the laws of the State of Minnesota.

DAVE T. BLUME
Reg.No. 24577 Date 03/01/2016

Gausman & Moore
Mechanical and Electrical Engineers
501 SOUTH LAKE AVE
SUITE 310
DULUTH MINNESOTA, 55802
(218)722-2555 FAX 722-9306
Project No. 84280

ELECTRICAL PLAN FIRST FLOOR REVISED

DULUTH ENERGY SYSTEMS

DULUTH ENERGY SYSTEMS GENERATOR REPLACEMENT
1 LAKE PLACE DRIVE
DULUTH, MN 55802

E1.2

ATTACHMENT A
PRIME CONTRACTOR RESPONSE

RESPONSIBLE CONTRACTOR VERIFICATION AND CERTIFICATION OF COMPLIANCE

STATE PROJECT NUMBER: _____

This form includes changes by statutory references from the Laws of Minnesota 2015, chapter 64, sections 1-9. This form must be submitted with the response to this solicitation. A response received without this form, will be rejected.

Minn. Stat. § 16C.285, Subd. 7. **IMPLEMENTATION.** … any prime contractor or subcontractor or motor carrier that does not meet the minimum criteria in subdivision 3 or fails to verify that it meets those criteria is not a responsible contractor and is not eligible to be awarded a construction contract for the project or to perform work on the project…	
Minn. Stat. § 16C.285, Subd. 3. **RESPONSIBLE CONTRACTOR, MINIMUM CRITERIA**. "Responsible contractor" means a contractor that conforms to the responsibility requirements in the solicitation document for its portion of the work on the project and verifies that it meets the following minimum criteria:	
(1)	The Contractor: (i) is in compliance with workers' compensation and unemployment insurance requirements; (ii) is in compliance with Department of Revenue and Department of Employment and Economic Development registration requirements if it has employees; (iii) has a valid federal tax identification number or a valid Social Security number if an individual; and (iv) has filed a certificate of authority to transact business in Minnesota with the Secretary of State if a foreign corporation or cooperative.
(2)	The contractor or related entity is in compliance with and, during the three-year period before submitting the verification, has not violated section 177.24, 177.25, 177.41 to 177.44, 181.13, 181.14, or 181.722, and has not violated United States Code, title 29, sections 201 to 219, or United States Code, title 40, sections 3141 to 3148. For purposes of this clause, a violation occurs when a contractor or related entity: (i) repeatedly fails to pay statutorily required wages or penalties on one or more separate projects for a total underpayment of $25,000 or more within the three-year period, provided that a failure to pay is “repeated” only if it involves two or more separate and distinct occurrences of underpayment during the three-year period; (ii) has been issued an order to comply by the commissioner of Labor and Industry that has become final; (iii) has been issued at least two determination letters within the three-year period by the Department of Transportation finding an underpayment by the contractor or related entity to its own employees; (iv) has been found by the commissioner of Labor and Industry to have repeatedly or willfully violated any of the sections referenced in this clause pursuant to section 177.27; (v) has been issued a ruling or findings of underpayment by the administrator of the Wage and Hour Division of the United States Department of Labor that have become final or have been upheld by an administrative law judge or the Administrative Review Board; or (vi) has been found liable for underpayment of wages or penalties or misrepresenting a construction worker as an independent contractor in an action brought in a court having jurisdiction. Provided that, if the contractor or related entity contests a determination of underpayment by the Department of Transportation in a contested case proceeding, a violation does not occur until the contested case proceeding has concluded with a determination that the contractor or related entity underpaid wages or penalties;*

(3)	The contractor or related entity is in compliance with and, during the three-year period before submitting the verification, has not violated section 181.723 or chapter 326B. For purposes of this clause, a violation occurs when a contractor or related entity has been issued a final administrative or licensing order;*
(4)	The contractor or related entity has not, more than twice during the three-year period before submitting the verification, had a certificate of compliance under section 363A.36 revoked or suspended based on the provisions of section 363A.36, with the revocation or suspension becoming final because it was upheld by the Office of Administrative Hearings or was not appealed to the office;*
(5)	The contractor or related entity has not received a final determination assessing a monetary sanction from the Department of Administration or Transportation for failure to meet targeted group business, disadvantaged business enterprise, or veteran-owned business goals, due to a lack of good faith effort, more than once during the three-year period before submitting the verification;*
	* Any violations, suspensions, revocations, or sanctions, as defined in clauses (2) to (5), occurring prior to July 1, 2014, shall not be considered in determining whether a contractor or related entity meets the minimum criteria.
(6)	The contractor or related entity is not currently suspended or debarred by the federal government or the state of Minnesota or any of its departments, commissions, agencies, or political subdivisions that have authority to debar a contractor; and
(7)	All subcontractors and motor carriers that the contractor intends to use to perform project work have verified to the contractor through a signed statement under oath by an owner or officer that they meet the minimum criteria listed in clauses (1) to (6).

Minn. Stat. § 16C.285, Subd. 5. **SUBCONTRACTOR VERIFICATION**.

A prime contractor or subcontractor shall include in its verification of compliance under subdivision 4 a list of all of its first-tier subcontractors that it intends to retain for work on the project. Prior to execution of a construction contract, and as a condition precedent to the execution of a construction contract, the apparent successful prime contractor shall submit to the contracting authority a supplemental verification under oath confirming compliance with subdivision 3, clause (7). Each contractor or subcontractor shall obtain from all subcontractors with which it will have a direct contractual relationship a signed statement under oath by an owner or officer verifying that they meet all of the minimum criteria in subdivision 3 prior to execution of a construction contract with each subcontractor.

If a prime contractor or any subcontractor retains additional subcontractors on the project after submitting its verification of compliance, the prime contractor or subcontractor shall obtain verifications of compliance from each additional subcontractor with which it has a direct contractual relationship and shall submit a supplemental verification confirming compliance with subdivision 3, clause (7), within 14 days of retaining the additional subcontractors.

A prime contractor shall submit to the contracting authority upon request copies of the signed verifications of compliance from all subcontractors of any tier pursuant to subdivision 3, clause (7). A prime contractor and subcontractors shall not be responsible for the false statements of any subcontractor with which they do not have a direct contractual relationship. A prime contractor and subcontractors shall be responsible for false statements by their first-tier subcontractors with which they have a direct contractual relationship only if they accept the verification of compliance with actual knowledge that it contains a false statement.

Subd. 5a. **Motor carrier verification.** A prime contractor or subcontractor shall obtain annually from all motor carriers with which it will have a direct contractual relationship a signed statement under oath by an owner or officer verifying that they meet all of the minimum criteria in subdivision 3 prior to execution of a construction contract with each motor carrier. A prime contractor or subcontractor shall require each such motor carrier to provide it with immediate written notification in the event that the motor carrier no longer meets one or more of the minimum criteria in subdivision 3 after submitting its annual verification. A motor carrier shall be ineligible to perform work on a project covered by this section if it does not meet all the minimum criteria in subdivision 3. Upon request, a prime contractor or subcontractor shall submit to the contracting authority the signed verifications of compliance from all motor carriers providing for-hire transportation of materials, equipment, or supplies for a project.

Minn. Stat. § 16C.285, Subd. 4. **VERIFICATION OF COMPLIANCE.**
A contractor responding to a solicitation document of a contracting authority shall submit to the contracting authority a signed statement under oath by an owner or officer verifying compliance with each of the minimum criteria in subdivision 3, with the exception of clause (7), at the time that it responds to the solicitation document. A contracting authority may accept a signed statement under oath as sufficient to demonstrate that a contractor is a responsible contractor and shall not be held liable for awarding a contract in reasonable reliance on that statement. A prime contractor, subcontractor, or motor carrier that fails to verify compliance with any one of the required minimum criteria or makes a false statement under oath in a verification of compliance shall be ineligible to be awarded a construction contract on the project for which the verification was submitted. A false statement under oath verifying compliance with any of the minimum criteria may result in termination of a construction contract that has already been awarded to a prime contractor or subcontractor or motor carrier that submits a false statement. A contracting authority shall not be liable for declining to award a contract or terminating a contract based on a reasonable determination that the contractor failed to verify compliance with the minimum criteria or falsely stated that it meets the minimum criteria. A verification of compliance need not be notarized. An electronic verification of compliance made and submitted as part of an electronic bid shall be an acceptable verification of compliance under this section provided that it contains an electronic signature as defined in section 325L.02, paragraph (h).

CERTIFICATION	
By signing this document I certify that I am an owner or officer of the company, and I swear under oath that: **1) My company meets each of the Minimum Criteria to be a responsible contractor as defined herein and is in compliance with Minn. Stat. § 16C.285, and** **2) if my company is awarded a contract, I will submit Attachment A-1 prior to contract execution, and** **3) if my company is awarded a contract, I will also submit Attachment A-2 as required.**	
Authorized Signature of Owner or Officer:	**Printed Name:**
Title:	**Date:**
Company Name:	

NOTE: Minn. Stat. § 16C.285, Subd. 2, (c) If only one prime contractor responds to a solicitation document, a contracting authority may award a construction contract to the responding prime contractor even if the minimum criteria in subdivision 3 are not met.

ATTACHMENT A-1

FIRST-TIER SUBCONTRACTORS LIST

SUBMIT PRIOR TO EXECUTION OF A CONSTRUCTION CONTRACT

STATE PROJECT NUMBER: _____

Minn. Stat. § 16C.285, Subd. 5. A prime contractor or subcontractor shall include in its verification of compliance under subdivision 4 a list of all of its first-tier subcontractors that it intends to retain for work on the project. Prior to execution of a construction contract, and as a condition precedent to the execution of a construction contract, the apparent successful prime contractor shall submit to the contracting authority a supplemental verification under oath confirming compliance with subdivision 3, clause (7). Each contractor or subcontractor shall obtain from all subcontractors with which it will have a direct contractual relationship a signed statement under oath by an owner or officer verifying that they meet all of the minimum criteria in subdivision 3 prior to execution of a construction contract with each subcontractor.

FIRST TIER SUBCONTRACTOR NAMES* (Legal name of company as registered with the Secretary of State)	**Name of city where company home office is located**

*Attach additional sheets as needed for submission of all first-tier subcontractors.

SUPPLEMENTAL CERTIFICATION FOR ATTACHMENT A-1	
By signing this document I certify that I am an owner or officer of the company, and I swear under oath that: **All first-tier subcontractors listed on attachment A-1 have verified through a signed statement under oath by an owner or officer that they meet the minimum criteria to be a responsible contractor as defined in Minn. Stat. § 16C.285.**	
Authorized Signature of Owner or Officer:	**Printed Name:**
Title:	**Date:**
Company Name:	

ATTACHMENT A-2

ADDITIONAL SUBCONTRACTORS LIST

PRIME CONTRACTOR TO SUBMIT AS SUBCONTRACTORS ARE ADDED TO THE PROJECT

STATE PROJECT NUMBER: _____

This form must be submitted to the Project Manager or individual as identified in the solicitation document.

Minn. Stat. § 16C.285, Subd. 5. … If a prime contractor or any subcontractor retains additional subcontractors on the project after submitting its verification of compliance, the prime contractor or subcontractor shall obtain verifications of compliance from each additional subcontractor with which it has a direct contractual relationship and shall submit a supplemental verification confirming compliance with subdivision 3, clause (7), within 14 days of retaining the additional subcontractors. …

ADDITIONAL SUBCONTRACTOR NAMES* (Legal name of company as registered with the Secretary of State)	**Name of city where company home office is located**

*Attach additional sheets as needed for submission of all additional subcontractors.

SUPPLEMENTAL CERTIFICATION FOR ATTACHMENT A-2	
By signing this document I certify that I am an owner or officer of the company, and I swear under oath that: **All additional subcontractors listed on Attachment A-2 have verified through a signed statement under oath by an owner or officer that they meet the minimum criteria to be a responsible contractor as defined in Minn. Stat. § 16C.285.**	
Authorized Signature of Owner or Officer:	**Printed Name:**
Title:	**Date:**
Company Name:	

AFFIDAVIT AND INFORMATION REQUIRED OF BIDDERS

Affidavit of Non-Collusion:

I hereby swear (or affirm) under penalty of perjury:

1) That I am the bidder (if the bidder is an individual), a partner in the bidder (if the bidder is a partnership), or an officer or employee of the bidding corporation having authority to sign on its behalf (if the bidder is a corporation);

2) That the attached bid or bids have been arrived at by the bidder independently and have been submitted without collusion with and without agreement, understanding, or planned common course of action with any other vendor of materials, supplies, equipment or services described in the invitation to bid, designed to limit independent bidding or competition;

3) That the contents of the bid or bids have not been communicated by the bidder or its employees or agents to any person not an employee or agent of the bidder or its surety on any bond furnished with the bid or bids and will not be communicated to any such person prior to the official opening of the bid or bids;

4) That a family relationship between a City of Duluth employee and bidder/proposer are in non-collusion; and

5) That I have fully informed myself regarding the accuracy of the statements made in this affidavit.

Signed: _____

Firm Name: _____

Subscribed and sworn to me before this _____ day of _____, _____

NOTARY PUBLIC _____

My commission expires: _____

Bidder's Federal Identification Number _____

EQUAL EMPLOYMENT OPPORTUNITY EEO AFFIRMATIVE ACTION
POLICY STATEMENT & COMPLIANCE CERTIFICATE

TO: City of Duluth, MN PROJECT NUMBER & DESCRIPTION _____

_____

FROM: _____

_____
(Vendor's name, address, telephone number)

A) Employment: It is the policy of the above named FIRM to afford equal opportunity for employment to all individuals regardless of race, color, creed, religion, national origin, ancestry, age, sex, marital status, status with respect to public assistance and/or disability. The FIRM will take affirmative action to ensure that we will: (1) recruit, hire, and promote all job classifications without regard to race, color, creed, religion, national origin, ancestry, age, sex, marital status, status with respect to public assistance, and/or disability, except where sex is a bona fide occupational qualification; (2) base decisions on employment so as to further the principle of equal employment opportunity; (3) ensure that promotion decisions are in accord with the principles of equal employment opportunity by imposing only valid requirements for promotional opportunities; (4) ensure that all personnel actions such as compensation, benefits, transfers, layoffs, return from layoff, FIRM sponsored training, education tuition assistance, social and recreational programs will be administered without regard to race, color, creed, religion, national origin, ancestry, age, sex, marital status, status with respect to public assistance, and/or disability. The FIRM also intends full compliance with Veteran affirmative action requirements. Additionally, minority and female employees shall be encouraged to participate in all FIRM activities and refer applicants.

I have designated (name) _____to direct the establishment of and to monitor the implementation of personnel procedures to guide the FIRM's affirmative action program. Where PROJECTS exceed $500,000, this official shall also serve as the liaison officer that administers the FIRM's "Minority Business Enterprise Program." This official is charged with designing and implementing audit and reporting systems that will keep management informed on a monthly basis of the status of the equal opportunity area.

Supervisors have been made to understand that their work performance is being evaluated on the basis of their equal opportunity efforts and results, as well as other criteria. It shall be the responsibility of the FIRM and its supervisors to take actions to prevent harassment of employees placed through affirmative action efforts.

B) Reports: Unless exempted by law and regulation, the FIRM shall make available and file those reports related to equal opportunity as may be required by the City of Duluth and State and Federal compliance agencies. Requirements and Reports are defined in 41CFR60 "Compliance Responsibility for Equal Opportunity" published by the U. S.Department of Labor which is incorporated herein by reference. Additional requirements are defined in various State and Federal Civil Rights Legislation and Rules promulgated thereunder.

C) Nonsegregated Facilities: The FIRM certifies that it does not maintain or provide for its employees any segregated facilities at any of its establishments and that it does not permit its employees to perform their services at any location, under its control, where segregated facilities are maintained. The FIRM certifies that it will not maintain or provide for its employees any segregated facilities at any of its establishments and that it will not permit its employees to perform their services at any location, under its control, where segregated facilities are maintained. The FIRM agrees that a breach of this certification is a violation of the Equal Opportunity Clause in this certificate. As used in this Certification, the term "segregated

facilities" means any waiting rooms, work area, rest rooms and wash rooms, restaurants and other eating areas, time clocks, locker rooms and other storage or dressing areas, parking lots, drinking fountains, recreation for entertainment area, transportation, and housing facilities provided for employees which are segregated by explicit directive or are, in fact, segregated on the basis of race, color, religion, or national origin, because of habit, local custom, or otherwise.

D) Affirmative Action Compliance Program: Unless exempted by regulation and law, the FIRM–if the FIRM has 50 or more employees and if the value of current contracts with the City of Duluth exceeds $50,000–shall prepare and maintain a written affirmative action compliance program that meets the requirement as set forth in 41CFR60.

E) Non-Compliance: The FIRM certifies that it is not currently in receipt of any outstanding letters of deficiencies, show cause, probable cause, or other such notification of non-compliance with EEO Laws and Regulations.

F) Employment Goals - "Construction" Projects: It shall be the goal of the FIRM if the PROJECT is of a construction nature that in all on-site employment generated that no less than 3% of the on-site workforce will be minority employees and that no less than 7% of the on-site workforce will be female employees. Further, it is the goal of the FIRM if the PROJECT is of a construction nature that in all on-site employment generated that no less than 3% of the work hours generated shall be worked by minority employees and that no less than 7% of the work hours generated shall be worked by female employees.

G) Subcontractors: The FIRM will for all its PROJECT subcontractors regardless of tier (unless exempted by law and regulation) that received in excess of $2,500 require that: (1) the subcontractor shall execute an "EEO Statement and Certification" similar in nature to this "Statement and Certification", (2) said documentation to be maintained on file with the FIRM or subcontractor as may be appropriate.

Executed this _____ day of _____, 20__ by:

_____

Printed name and title

_____

Signature

NOTE: In addition to the various remedies prescribed for violation of Equal Opportunity Laws, the penalty for false statements is prescribed in 18 U.S.C. 1001.

General Decision Number: MN160041 03/04/2016 MN41

Superseded General Decision Number: MN20150041

State: Minnesota

Construction Type: Building

County: St Louis County in Minnesota.

BUILDING CONSTRUCTION PROJECTS (does not include single family homes or apartments up to and including 4 stories).

Note: Under Executive Order (EO) 13658, an hourly minimum wage of $10.15 for calendar year 2016 applies to all contracts subject to the Davis-Bacon Act for which the solicitation was issued on or after January 1, 2015. If this contract is covered by the EO, the contractor must pay all workers in any classification listed on this wage determination at least $10.15 (or the applicable wage rate listed on this wage determination, if it is higher) for all hours spent performing on the contract in calendar year 2016. The EO minimum wage rate will be adjusted annually. Additional information on contractor requirements and worker protections under the EO is available at www.dol.gov/whd/govcontracts.

Modification Number	Publication Date
0	01/08/2016
1	03/04/2016

ASBE0049-007 06/01/2014

	Rates	Fringes
ASBESTOS WORKER/HEAT & FROST INSULATOR (Includes the application of all insulating materials, protective coverings, coatings & finishes to all types of mechanical systems)	$ 26.82	23.80

BOIL0647-007 01/01/2013

	Rates	Fringes
BOILERMAKER	$ 32.40	25.37

BRMN0001-050 05/01/2015

ST LOUIS (Remaining Northern part)

	Rates	Fringes
TILE SETTER	$ 24.59	20.98

BRMN0003-008 05/01/2014

ST. LOUIS COUNTY (City of Duluth and South of a line between Townships #54 & #55, 2 miles north of Cotton)

	Rates	Fringes
BRICKLAYER	$ 32.20	20.10

BRMN0003-011 05/01/2008

ST. LOUIS (City of Duluth and south of Township Line 55)

	Rates	Fringes
TILE SETTER	$ 24.13	17.38

BRMN0016-002 05/01/2014

ST. LOUIS COUNTY (North of a line between Townships #54 & #55, 2 miles north of Cotton)

	Rates	Fringes
BRICKLAYER	$ 31.75	20.55

CARP0068-005 07/01/2012

	Rates	Fringes
SOFT FLOOR LAYER	$ 30.94	11.75

CARP0361-012 05/01/2015

DULUTH AREA including Alborn, Arnold, Bartlett, Birch, Brookstone, Canyon, Clinton, Culver, Floodwood, Gowan, Island, Kelsey, Lakewood, Meadowlands, Munger, Palmers, Payne, Prasit, Shaw, Taft)

	Rates	Fringes
CARPENTER (Including Acoustical Installation, Drywall Hanging, Form Work & Overhead Door Installation)	$ 29.55	16.08

CARP0606-001 05/01/2015

EXCLUDING DULUTH AREA

	Rates	Fringes
CARPENTER (Including Acoustical Installation, Drywall Hanging, Form Work & Overhead Door Installation)	$ 29.45	14.37

---

* ELEC0242-012 05/31/2015

ST. LOUIS (South part bounded on the north by the north line of Kelsey Township extended east & west)

	Rates	Fringes
ELECTRICIAN	$ 33.90	24.47

ELEC0294-006 05/31/2015

ST. LOUIS (North part bounded on the south by the south line of Ellsburg Township, extended east & west)

	Rates	Fringes
ELECTRICIAN	$ 34.68	61.54%

ENGI0049-045 05/01/2015

	Rates	Fringes
OPERATOR: Power Equipment		
GROUP 1	$ 37.74	17.15
GROUP 2	$ 37.40	17.15
GROUP 3	$ 35.99	17.15
GROUP 4	$ 35.65	17.15
GROUP 5	$ 35.48	17.15
GROUP 6	$ 33.97	17.15
GROUP 7	$ 32.85	17.15
GROUP 8	$ 30.84	17.15

POWER EQUIPMENT OPERATOR CLASSIFICATIONS

GROUP 1: Truck & Crawler Crane with 200' of Boom & Over, including Jib ($.50 premium with 300' of Boom & over, including jib); & Tower Crane 250' & Over.

GROUP 2: Truck & Crawler Crane with 150' of Boom, up to but not including 200' of Boom, including Jib; & Tower Crane 200' & Over.

GROUP 3: Traveling Tower Crane; Truck & Crawler Crane, up to but not including 150' of Boom, including Jib; Tower Crane (Stationary) up to 200'; All-Terrain Vehicle Crane, Boom Truck over 100 ft.

GROUP 4: Backhoe/Track/Trackhoe, Hoist (3 drums or more); Overhead Crane (inside building perimeter), Excavator.

GROUP 5: Asphalt Spreader, Bulldozer, Curb Machine, Drill, Forklift, Compressor 450 CFM or over (2 or more machines); Boom Truck up to 100 ft, Loader over 1 cu yd, Hoist (1 or 2 drums); Mechanic; Milling Machine, Roller, Scraper, Tractor over D2.

GROUP 6: Bobcat/Skid Loader, Loader up to 1 cu. yd., Tractor D2 or similar size.

GROUP 7: Compressor 600 CFM or over, Crane Oiler.

GROUP 8: Oiler.

IRON0512-018 05/01/2015

	Rates	Fringes
IRONWORKER, ORNAMENTAL, REINFORCING, AND STRUCTURAL.....	$ 31.04	23.45

LABO1091-011 01/01/2014

	Rates	Fringes
LABORER (ASBESTOS ABATEMENT)		
Removal from Floors, Walls & Ceilings.....	$ 27.89	16.31

LABO1091-013 05/01/2012

ST. LOUIS (South of T 55 N)

	Rates	Fringes
Laborers:		
GROUP 1.....	$ 21.95	14.93
GROUP 2.....	$ 22.10	14.93
GROUP 3.....	$ 22.35	14.93
GROUP 4.....	$ 22.65	14.93

LABORER CLASSIFICATIONS

GROUP 1: Common or General, Asphalt Shoveler, Carpenter Tender, Form Stripping

GROUP 2: Vibrating Plate

GROUP 3: Pipelayer

GROUP 4: Mason Tender (Brick, Cement/Concrete)

LABO1097-008 05/01/2012

ST.LOUIS (North of T 55N)

	Rates	Fringes
LABORER		
GROUP 1.....	$ 20.62	16.25
GROUP 2.....	$ 21.02	16.25

LABORERS CLASSIFICATIONS

GROUP 1 - Common or General, Asphalt Shoveler, Carpenter Tender, Form Stripping, Mason Tender (Brick, Cement/Concrete)

GROUP 2 - Pipelayer, Vibrating Plate

PAIN0106-001 05/01/2013

	Rates	Fringes
GLAZIER	$ 26.28	15.47

FOOTNOTE:
1 to 4 years service - 1 week paid vacation; 5 to 11 years - 2 weeks paid vacation; 11 years or more - 3 weeks paid vacation

---

PAIN0106-013 05/01/2014

	Rates	Fringes
Painters:		
New:		
Brush, Roller	$ 28.81	15.27
Spray, Drywall Finisher/Taper	$ 29.41	15.27
Repaint:		
Brush, Roller	$ 27.31	15.27
Spray, Drywall Finisher/Taper	$ 27.91	15.27

PLAS0633-024 05/01/2012

ST. LOUIS (North of White Face River) COUNTIES

	Rates	Fringes
CEMENT MASON/CONCRETE FINISHER	$ 26.71	14.64

PLAS0633-059 05/01/2012

CARLTON & ST. LOUIS (South of T 55N) COUNTIES

	Rates	Fringes
CEMENT MASON/CONCRETE FINISHER	$ 29.69	16.30

---

* PLUM0011-019 05/04/2015

ST. LOUIS (South of an east-west line drawn through Cotton)

	Rates	Fringes
PLUMBER/PIPEFITTER	$ 38.17	18.13

---

* PLUM0589-007 05/01/2015

ST. LOUIS (North of an East- West line drawn through Cotton)

	Rates	Fringes
PLUMBER/PIPEFITTER		
Contracts $90,000.00 and under	$ 38.65	17.71
Contracts over $90,000.00	$ 38.65	17.71

ROOF0096-024 07/01/2015

ST. LOUIS (South of Hwy 16, excluding City of Forbes)

	Rates	Fringes
ROOFER	$ 32.15	14.67

ROOF0096-025 05/01/2015

ST. LOUIS (Remaining Northern two-thirds)

	Rates	Fringes
ROOFER	$ 28.89	11.13

SHEE0010-045 05/01/2009

ST. LOUIS (Southern one-third)

	Rates	Fringes

SHEET METAL WORKER (Including
HVAC Duct Installation).....$ 31.61 16.52

SHEE0010-056 05/01/2008

ST. LOUIS (Northern two-thirds)

	Rates	Fringes
SHEET METAL WORKER (Including HVAC Duct Installation)	$ 29.99	16.08

SUMN2009-050 07/27/2009

	Rates	Fringes
LABORER: Landscape	$ 12.88	4.61
TRUCK DRIVER: Dump Truck	$ 19.15	5.70

WELDERS - Receive rate prescribed for craft performing operation to which welding is incidental.

==========

Unlisted classifications needed for work not included within the scope of the classifications listed may be added after award only as provided in the labor standards contract clauses (29CFR 5.5 (a) (1) (ii)).

The body of each wage determination lists the classification and wage rates that have been found to be prevailing for the cited type(s) of construction in the area covered by the wage determination. The classifications are listed in alphabetical order of "identifiers" that indicate whether the particular rate is a union rate (current union negotiated rate for local), a survey rate (weighted average rate) or a union average rate (weighted union average rate).

Union Rate Identifiers

A four letter classification abbreviation identifier enclosed in dotted lines beginning with characters other than "SU" or "UAVG" denotes that the union classification and rate were prevailing for that classification in the survey. Example: PLUM0198-005 07/01/2014. PLUM is an abbreviation identifier of the union which prevailed in the survey for this classification, which in this example would be Plumbers. 0198 indicates the local union number or district council number where applicable, i.e., Plumbers Local 0198. The next number, 005 in the example, is an internal number used in processing the wage determination. 07/01/2014 is the effective date of the most current negotiated rate, which in this example is July 1, 2014.

Union prevailing wage rates are updated to reflect all rate changes in the collective bargaining agreement (CBA) governing this classification and rate.

Survey Rate Identifiers

Classifications listed under the "SU" identifier indicate that no one rate prevailed for this classification in the survey and the published rate is derived by computing a weighted average rate based on all the rates reported in the survey for that classification. As this weighted average rate includes all rates reported in the survey, it may include both union and non-union rates. Example: SULA2012-007 5/13/2014. SU indicates the rates are survey rates based on a weighted average calculation of rates and are not majority rates. LA indicates the State of Louisiana. 2012 is the year of survey on which these classifications and rates are based. The next number, 007 in the example, is an internal number used in producing the wage determination. 5/13/2014 indicates the survey completion

date for the classifications and rates under that identifier.

Survey wage rates are not updated and remain in effect until a new survey is conducted.

Union Average Rate Identifiers

Classification(s) listed under the UAVG identifier indicate that no single majority rate prevailed for those classifications; however, 100% of the data reported for the classifications was union data. EXAMPLE: UAVG-OH-0010 08/29/2014. UAVG indicates that the rate is a weighted union average rate. OH indicates the state. The next number, 0010 in the example, is an internal number used in producing the wage determination. 08/29/2014 indicates the survey completion date for the classifications and rates under that identifier.

A UAVG rate will be updated once a year, usually in January of each year, to reflect a weighted average of the current negotiated/CBA rate of the union locals from which the rate is based.

WAGE DETERMINATION APPEALS PROCESS

1.) Has there been an initial decision in the matter? This can be:

* an existing published wage determination
* a survey underlying a wage determination
* a Wage and Hour Division letter setting forth a position on a wage determination matter
* a conformance (additional classification and rate) ruling

On survey related matters, initial contact, including requests for summaries of surveys, should be with the Wage and Hour Regional Office for the area in which the survey was conducted because those Regional Offices have responsibility for the Davis-Bacon survey program. If the response from this initial contact is not satisfactory, then the process described in 2.) and 3.) should be followed.

With regard to any other matter not yet ripe for the formal process described here, initial contact should be with the Branch of Construction Wage Determinations. Write to:

Branch of Construction Wage Determinations
Wage and Hour Division
U.S. Department of Labor
200 Constitution Avenue, N.W.
Washington, DC 20210

2.) If the answer to the question in 1.) is yes, then an interested party (those affected by the action) can request review and reconsideration from the Wage and Hour Administrator (See 29 CFR Part 1.8 and 29 CFR Part 7). Write to:

Wage and Hour Administrator
U.S. Department of Labor
200 Constitution Avenue, N.W.
Washington, DC 20210

The request should be accompanied by a full statement of the interested party's position and by any information (wage payment data, project description, area practice material, etc.) that the requestor considers relevant to the issue.

3.) If the decision of the Administrator is not favorable, an interested party may appeal directly to the Administrative Review Board (formerly the Wage Appeals Board). Write to:

Administrative Review Board
U.S. Department of Labor
200 Constitution Avenue, N.W.
Washington, DC 20210

4.) All decisions by the Administrative Review Board are final.

==========

END OF GENERAL DECISION