INVITATION TO BID

HART DISTRICT PARKING RAMP STRUCTURAL REPAIRS

115 East Superior St.
Duluth, MN

POSTED: NOVEMBER 1, 2016

Bid #: 16-0651

BIDS DUE: TUESDAY, NOVEMBER 22, 2016 @ 2:00 PM

Parking Division
City Hall, Ground Floor
411 West 1st Street
Duluth, MN 55802

TABLE OF CONTENTS

BIDDING INFORMATION & FORMS

INVITATION TO BID & INSTRUCTIONS TO BIDDERS
BID FORM

AFFIDAVIT OF NON-COLLUSION
EQUAL EMPLOYMENT OPPORTUNITY (EEO) POLICY STATEMENT & COMPLIANCE CERTIFICATE

CONDITIONS OF CONTRACT

DRAFT CONSTRUCTION CONTRACT
CITY OF DULUTH - PART II - SUPPLEMENTARY GENERAL CONDITIONS FOR FEDERALLY, STATE OF MINNESOTA, AND/OR CITY ASSISTED ACTIVITIES
PREVAILING WAGE RATES
PROJECT LABOR AGREEMENT

PLANS & SPECIFICATIONS

Purchasing Division
100 City Hall, 411 W. 1st Street
Duluth, MN 55802-1189
TEL. 218-730-5340 FAX: 218-730-5921
purchasing@duluthmn.gov

INVITATION TO BID

HART DISTRICT PARKING RAMP STRUCTURAL REPAIRS

BID NUMBER: **16-0651** **BID OPENING: TUESDAY, NOVEMBER 22, 2016 AT 2:00 PM**

PROJECT DESCRIPTION: Rehabilitation and repair of the Hart District parking ramp structure. Project will be performed in two phases. Please refer to the specifications and drawings for more information.

PRE-BID/WALK-THROUGH: A pre-bid meeting will be conducted on THURSDAY, NOVEMBER 10, 2016 at 2:00 PM in Room 106A of City Hall, located at 411 West 1st Street in Duluth. All interested bidders are encouraged to attend. The pre-bid may be followed by a site visit, depending upon bidder interest.

QUESTIONS: Please submit any questions regarding this project via e-mail to purchasing@duluthmn.gov. Responses will be provided to all interested bidders as an addendum to this solicitation.

The selected contractor will be issued a construction contract (draft attached). Notice to Proceed will be issued once the agreement is fully executed.

Proposal forms, contract documents, plans and specifications are on file at the following offices: Duluth Builder's Exchange, Minnesota Builder's Exchange, BXWI-Fox Valley Plan Room, and Blue Book Building and Construction Network.

INSTRUCTIONS TO BIDDERS

All bids must be complete, signed, and transmitted in a sealed envelope plainly marked with the bid number, subject matter, and opening date.

Bids may be mailed to the Purchasing Office, City Hall, 411 West 1st Street, Room 100, Duluth, MN 55802 or dropped off in person at the same address.

Bids must be received in Purchasing before 2:00 PM local time on the bid opening date specified on the Invitation for Bids. The City Purchasing Agent or her designee will conduct a public bid opening in Room 100 immediately following receipt of the bids. Bid results will be posted online at http://www.duluthmn.gov/purchasing/bids-request-for-proposals/ once all bids have been reviewed.

No alternatives to the specification will be considered unless specifically requested. Erasures or other changes to the bid must be initialed and dated, however no special conditions shall be made or included in the bid form by the bidder.

The City of Duluth reserves the right to split the award where there is a substantial savings to the City, to waive informalities and to reject any and all bids. Do not include sales tax in the unit price. Price may not be the only consideration for bid award. Bids must be firm for a minimum of 30 days.

The following documents <u>must be submitted</u> with your bid:

1. **Bid Bond** - A certified check or bank draft, payable to the order of the City of Duluth, negotiable U.S. Government Bonds (at par value), or a satisfactory bid bond executed by the bidder and acceptable surety, in an amount equal to five per cent (5%) of the total bid. Bids may be withdrawn without forfeiture of surety if the request is submitted by the Bidder and received at the Purchasing Office in writing or by e-mail prior

to the scheduled bid opening.

2. **Acknowledgment of Addendum –** any changes to this solicitation will be announced via Addendum. Bidders must indicate that they have reviewed any addendum(s) by initialing and dating on the bid form where indicated. Failure to acknowledge addendum(s) may result in your bid being deemed non-responsive.

3. **Responsible Contractor** - No construction contract in excess of $50,000 will be awarded unless the Bidder is a "responsible contractor" as defined in Minnesota Statute §16C.285, subdivision 3. All Bidders submitting a proposal for this project must verify that they meet the minimum criteria specified in the statute by submitting a Responsible Contractor Verification and Certification of Compliance form (attached) with their bid. The owner or officer of the company must sign the form under oath verifying compliance with each of the minimum criteria. Making a false statement under oath will render the Bidder or subcontractor that makes the false statement ineligible to be awarded a construction project and may result in termination of a contract awarded to a Bidder or subcontractor that submits a false statement. Bidders must obtain verification of compliance from all subcontractors. Bidders must submit signed copies of verifications and certifications of compliance from subcontractors at the City's request.

Please note that the following requirements also apply to this project, and any additional required documents must be submitted prior to award/contract execution. Submitting these documents with your bid will assist in expediting the process.

1. **Insurance** – Contractor must provide proof of Public Liability and Automobile Liability Insurance with limits not less than $1,500,000 Single Limit prior to the commencement of work. The City of Duluth must be named as an additional insured. Please refer to the draft Contract, Section 7.

2. **Affidavit of Non-Collusion** – The successful bidder shall be required to execute the attached affidavit stating that he/she has not entered into a collusive agreement with any other person, firm, or corporation in regard to any bid submitted.

3. **Performance & Payment Bonds** – The awarded contractor will be required to submit performance and payments bonds in the full amount of the project cost prior to award.

4. **Affirmative Action/EEO** - The contractor must take affirmative action to ensure that the employees and applicants for employment are not discriminated against because of their race, color, creed, sex or national origin, and must meet the affirmative action goals. Contractors are encouraged to subcontract with Disadvantaged Business Enterprises (DBEs) when possible. A current list of certified DBEs is available on the Minnesota Unified Certification website at http://mnucp.metc.state.mn.us . Contractor will comply with all applicable Equal Employment Opportunity laws and regulations. Awarded contractor will submit the attached Equal Employment Opportunity (EEO) Affirmative Action Policy Statement & Compliance Certificate.

5. **Project Labor Agreement (PLA)** - A PLA will be required for any bid that is over or could virtually go over $150,000. A copy of the City standard PLA is included in this package.

6. **Out of State Contractor** - Unless a State of Minnesota Certificate of Exemption is provided, any out-of-state bidder receiving a bid award will have 8% retained from invoice payments on any contracts over $50,000. Submit a signed copy of the signed exemption form when submitting Payment and Performance Bonds. This form may be found at the following web address: http://www.revenue.state.mn.us/Forms_and_Instructions/sde.pdf

7. **Prevailing Wage** - Not less than the minimum salaries and prevailing wages as set forth in the contract documents must be paid on this project.

The City of Duluth is an Equal Opportunity Employer. Contractor shall comply with all applicable Equal Employment Opportunity laws and regulations.

CITY OF DULUTH

Amanda Ashbach
Purchasing Agent

HART DISTRICT PARKING RAMP – 2016-2017 REHAB

BID FORM

OWNER: City of Duluth, MN
411 West First Street
Duluth, MN 55802

BIDDER: _____

BIDDER ADDRESS: _____

_____

_____

PRIME CONTRACT BID

1. We hereby submit our Bid for Hart District Parking Ramp 2016-2017 Rehab, 115 East Superior Street, Duluth, MN.

2. We have examined the drawings, specifications, form of agreement and other Contract Documents, visited the site and noted all conditions affecting the work. We agree to accomplish the work in strict accordance with the requirements of drawings and specifications and other Contract Documents for the work as prepared by Palanisami & Associates, Inc. dated October 5, 2016 for the amounts stipulated herein.

3. We agree to hold open the bid for THIRTY (30) DAYS from the date of bid opening.

4. PHASE 1 – 2016: TOTAL BASE BID: Lump Sum for All Work: $_____

   _____
   (Words)

   (Provide the unit prices for all items) (Total Base Bid must equal sum of all Unit Price extensions)

   PHASE 2 – 2017: TOTAL BASE BID: Lump Sum for All Work: $_____

   _____
   (Words)

   (Provide the unit prices for all items) (Total Base Bid must equal sum of all Unit Price extensions)

5. DATE OF SUBSTANTIAL COMPLETION: If the undersigned is notified of the acceptance of this bid within 30 days, he agrees to complete the work under this contract by _____.

5a. Contractor shall maintain continuous work schedule throughout project. Earlier completion of the project is acceptable.

5b. Contractor shall submit their final bill/invoice on or before the specified dates in #5. Along with the final invoice, submit the applicable warranty certificates.

6. ACCEPTANCE OF BIDS: In submitting this bid, it is understood that the right is reserved by Owner to accept any bid in its best interest, reject all bids, and to waive informalities and discrepancies in bids and bidding procedure.

7. ADDENDA: We hereby acknowledge the Addendum instructions numbered _____ _____ have been received and/or the requirements therein have been incorporated in this bid. Addendum items, approvals or requests for clarification shall be submitted to the Engineer in writing at least three days prior to bid date.

8. CONTRACT: If awarded the Contract, the undersigned agrees to execute the Form of Agreement for the above stated compensation.

9. SUB-CONTRACTORS: Identify all Sub-contractors who will perform work which will not be self-performed by Bidder below:

Work Item, Description or Section:_____

Sub-Contractor and Contact Information: _____

_____

Work Item, Description or Section:_____

Sub-Contractor and Contact Information: _____

_____

Work Item, Description or Section:_____

Sub-Contractor and Contact Information: _____

_____

10. Proposed Construction Schedule attached? YES_____ NO_____

SIGNED:

_____
Name

Primary Point of Contact _____

Telephone Number _____

E-mail Address _____

UNIT PRICES:

Note: The Unit Price for each work item shall include all layout, field verification, labor, equipment, materials, permits, demolition, disposal, site preparation, shoring, dust barriers, traffic control, temporary facilities, protection of property, and cleanup required to complete the work item as shown on the drawings and specified in the project manual.

WORK ITEM	DESCRIPTION	UNIT	ESTIMATED QUANTITY	UNIT PRICE	EXTENSION
PHASE 1 – 2016					
1.0	Mobilization General Conditions	LS	1	$	$
1.1	Remove and Replace Double-Tee Flange Full Depth	SF	1050	$	$
1.2	Remove and Replace Double-Tee Joint Sealant	LF	2000	$	$
1.3	Repair Tee-to-Tee Connections	Each	60	$	$
1.4	Replace Tee-to-Tee Connection Embed	Each	30	$	$
1.5	ALLOWANCE Heated Enclosures	LS	1	$	$ 10,500.00
1.6	ALLOWANCE Electrical	LS	1	$	$ 4,000.00
PHASE 2 – 2017					
2.0	Mobilization General Conditions	LS	1	$	$
2.1	Remove and Replace Double-Tee Flange Full Depth	SF	500	$	$
2.2	Remove and Replace Double-Tee Joint Sealant	LF	430	$	$
2.3	Repair Tee-to-Tee Connections	Each	24	$	$
2.4	Replace Tee-to-Tee Connection Embed	Each	18	$	$
2.5	Remove and Replace Control Joint Sealant At Crossovers	LF	1050	$	$

2.6	Waterproof Deck Coating Type 1 – Heavy Duty	SF	5000	$ _____	$ _____
2.6A	Waterproof Deck Coating Type 2 – Heavy Duty UV Stable	SF	5000	$ _____	$ _____
2.7	Partial Depth Concrete Patch-Vertical Column Face	SF	10	$ _____	$ _____
2.8	Overhead Beam Ledge Repair	SF	20	$ _____	$ _____
2.9	Remove and Replace Concrete Apron Slab-on-Grade	SF	175	$ _____	$ _____
2.10	Remove and Replace Expansion Joint Between Double-Tees and Slab-on-Grade	LF	56	$ _____	$ _____
2.11	not used				
2.12	New Expansion Joint Between Double-Tees and Slab-on-Grade	LF	18	$ _____	$ _____
2.13	Double-Tee Stem Repair	LOC.	1	$ _____	$ _____
2.14	Remove and Replace Expansion Joint at Link Bridge	LF	48	$ _____	$ _____
2.15	Repair Slab Edge and Blockout at Expansion Joint	SF	50	$ _____	$ _____
2.16	Add Supplemental Tee Stem Bracket	Loc.	3	$ _____	$ _____
2.17	ALLOWANCE Electrical	LS	1	$ _____	$ 4,000.00

THIS FORM MUST BE RETURNED WITH YOUR BID

ATTACHMENT A
PRIME CONTRACTOR RESPONSE

RESPONSIBLE CONTRACTOR VERIFICATION AND CERTIFICATION OF COMPLIANCE

STATE PROJECT NUMBER: _____

This form includes changes by statutory references from the Laws of Minnesota 2015, chapter 64, sections 1-9. This form must be submitted with the response to this solicitation. A response received without this form, will be rejected.

Minn. Stat. § 16C.285, Subd. 7. **IMPLEMENTATION.** … any prime contractor or subcontractor or motor carrier that does not meet the minimum criteria in subdivision 3 or fails to verify that it meets those criteria is not a responsible contractor and is not eligible to be awarded a construction contract for the project or to perform work on the project…	
Minn. Stat. § 16C.285, Subd. 3. **RESPONSIBLE CONTRACTOR, MINIMUM CRITERIA**. "Responsible contractor" means a contractor that conforms to the responsibility requirements in the solicitation document for its portion of the work on the project and verifies that it meets the following minimum criteria:	
(1)	The Contractor: (i) is in compliance with workers' compensation and unemployment insurance requirements; (ii) is in compliance with Department of Revenue and Department of Employment and Economic Development registration requirements if it has employees; (iii) has a valid federal tax identification number or a valid Social Security number if an individual; and (iv) has filed a certificate of authority to transact business in Minnesota with the Secretary of State if a foreign corporation or cooperative.
(2)	The contractor or related entity is in compliance with and, during the three-year period before submitting the verification, has not violated section 177.24, 177.25, 177.41 to 177.44, 181.13, 181.14, or 181.722, and has not violated United States Code, title 29, sections 201 to 219, or United States Code, title 40, sections 3141 to 3148. For purposes of this clause, a violation occurs when a contractor or related entity: (i) repeatedly fails to pay statutorily required wages or penalties on one or more separate projects for a total underpayment of $25,000 or more within the three-year period, provided that a failure to pay is “repeated” only if it involves two or more separate and distinct occurrences of underpayment during the three-year period; (ii) has been issued an order to comply by the commissioner of Labor and Industry that has become final; (iii) has been issued at least two determination letters within the three-year period by the Department of Transportation finding an underpayment by the contractor or related entity to its own employees; (iv) has been found by the commissioner of Labor and Industry to have repeatedly or willfully violated any of the sections referenced in this clause pursuant to section 177.27; (v) has been issued a ruling or findings of underpayment by the administrator of the Wage and Hour Division of the United States Department of Labor that have become final or have been upheld by an administrative law judge or the Administrative Review Board; or (vi) has been found liable for underpayment of wages or penalties or misrepresenting a construction worker as an independent contractor in an action brought in a court having jurisdiction. Provided that, if the contractor or related entity contests a determination of underpayment by the Department of Transportation in a contested case proceeding, a violation does not occur until the contested case proceeding has concluded with a determination that the contractor or related entity underpaid wages or penalties;*

(3)	The contractor or related entity is in compliance with and, during the three-year period before submitting the verification, has not violated section 181.723 or chapter 326B. For purposes of this clause, a violation occurs when a contractor or related entity has been issued a final administrative or licensing order;*
(4)	The contractor or related entity has not, more than twice during the three-year period before submitting the verification, had a certificate of compliance under section 363A.36 revoked or suspended based on the provisions of section 363A.36, with the revocation or suspension becoming final because it was upheld by the Office of Administrative Hearings or was not appealed to the office;*
(5)	The contractor or related entity has not received a final determination assessing a monetary sanction from the Department of Administration or Transportation for failure to meet targeted group business, disadvantaged business enterprise, or veteran-owned business goals, due to a lack of good faith effort, more than once during the three-year period before submitting the verification;*
	* Any violations, suspensions, revocations, or sanctions, as defined in clauses (2) to (5), occurring prior to July 1, 2014, shall not be considered in determining whether a contractor or related entity meets the minimum criteria.
(6)	The contractor or related entity is not currently suspended or debarred by the federal government or the state of Minnesota or any of its departments, commissions, agencies, or political subdivisions that have authority to debar a contractor; and
(7)	All subcontractors and motor carriers that the contractor intends to use to perform project work have verified to the contractor through a signed statement under oath by an owner or officer that they meet the minimum criteria listed in clauses (1) to (6).

Minn. Stat. § 16C.285, Subd. 5. **SUBCONTRACTOR VERIFICATION**.

A prime contractor or subcontractor shall include in its verification of compliance under subdivision 4 a list of all of its first-tier subcontractors that it intends to retain for work on the project. Prior to execution of a construction contract, and as a condition precedent to the execution of a construction contract, the apparent successful prime contractor shall submit to the contracting authority a supplemental verification under oath confirming compliance with subdivision 3, clause (7). Each contractor or subcontractor shall obtain from all subcontractors with which it will have a direct contractual relationship a signed statement under oath by an owner or officer verifying that they meet all of the minimum criteria in subdivision 3 prior to execution of a construction contract with each subcontractor.

If a prime contractor or any subcontractor retains additional subcontractors on the project after submitting its verification of compliance, the prime contractor or subcontractor shall obtain verifications of compliance from each additional subcontractor with which it has a direct contractual relationship and shall submit a supplemental verification confirming compliance with subdivision 3, clause (7), within 14 days of retaining the additional subcontractors.

A prime contractor shall submit to the contracting authority upon request copies of the signed verifications of compliance from all subcontractors of any tier pursuant to subdivision 3, clause (7). A prime contractor and subcontractors shall not be responsible for the false statements of any subcontractor with which they do not have a direct contractual relationship. A prime contractor and subcontractors shall be responsible for false statements by their first-tier subcontractors with which they have a direct contractual relationship only if they accept the verification of compliance with actual knowledge that it contains a false statement.

Subd. 5a. **Motor carrier verification.** A prime contractor or subcontractor shall obtain annually from all motor carriers with which it will have a direct contractual relationship a signed statement under oath by an owner or officer verifying that they meet all of the minimum criteria in subdivision 3 prior to execution of a construction contract with each motor carrier. A prime contractor or subcontractor shall require each such motor carrier to provide it with immediate written notification in the event that the motor carrier no longer meets one or more of the minimum criteria in subdivision 3 after submitting its annual verification. A motor carrier shall be ineligible to perform work on a project covered by this section if it does not meet all the minimum criteria in subdivision 3. Upon request, a prime contractor or subcontractor shall submit to the contracting authority the signed verifications of compliance from all motor carriers providing for-hire transportation of materials, equipment, or supplies for a project.

Minn. Stat. § 16C.285, Subd. 4. **VERIFICATION OF COMPLIANCE.**
A contractor responding to a solicitation document of a contracting authority shall submit to the contracting authority a signed statement under oath by an owner or officer verifying compliance with each of the minimum criteria in subdivision 3, with the exception of clause (7), at the time that it responds to the solicitation document. A contracting authority may accept a signed statement under oath as sufficient to demonstrate that a contractor is a responsible contractor and shall not be held liable for awarding a contract in reasonable reliance on that statement. A prime contractor, subcontractor, or motor carrier that fails to verify compliance with any one of the required minimum criteria or makes a false statement under oath in a verification of compliance shall be ineligible to be awarded a construction contract on the project for which the verification was submitted. A false statement under oath verifying compliance with any of the minimum criteria may result in termination of a construction contract that has already been awarded to a prime contractor or subcontractor or motor carrier that submits a false statement. A contracting authority shall not be liable for declining to award a contract or terminating a contract based on a reasonable determination that the contractor failed to verify compliance with the minimum criteria or falsely stated that it meets the minimum criteria. A verification of compliance need not be notarized. An electronic verification of compliance made and submitted as part of an electronic bid shall be an acceptable verification of compliance under this section provided that it contains an electronic signature as defined in section 325L.02, paragraph (h).

CERTIFICATION	
By signing this document I certify that I am an owner or officer of the company, and I swear under oath that: **1) My company meets each of the Minimum Criteria to be a responsible contractor as defined herein and is in compliance with Minn. Stat. § 16C.285, and** **2) if my company is awarded a contract, I will submit Attachment A-1 prior to contract execution, and** **3) if my company is awarded a contract, I will also submit Attachment A-2 as required.**	
Authorized Signature of Owner or Officer:	**Printed Name:**
Title:	**Date:**
Company Name:	

NOTE: Minn. Stat. § 16C.285, Subd. 2, (c) If only one prime contractor responds to a solicitation document, a contracting authority may award a construction contract to the responding prime contractor even if the minimum criteria in subdivision 3 are not met.

ATTACHMENT A-1

FIRST-TIER SUBCONTRACTORS LIST

SUBMIT PRIOR TO EXECUTION OF A CONSTRUCTION CONTRACT

STATE PROJECT NUMBER: _____

Minn. Stat. § 16C.285, Subd. 5. A prime contractor or subcontractor shall include in its verification of compliance under subdivision 4 a list of all of its first-tier subcontractors that it intends to retain for work on the project. Prior to execution of a construction contract, and as a condition precedent to the execution of a construction contract, the apparent successful prime contractor shall submit to the contracting authority a supplemental verification under oath confirming compliance with subdivision 3, clause (7). Each contractor or subcontractor shall obtain from all subcontractors with which it will have a direct contractual relationship a signed statement under oath by an owner or officer verifying that they meet all of the minimum criteria in subdivision 3 prior to execution of a construction contract with each subcontractor.

FIRST TIER SUBCONTRACTOR NAMES* (Legal name of company as registered with the Secretary of State)	**Name of city where company home office is located**

*Attach additional sheets as needed for submission of all first-tier subcontractors.

SUPPLEMENTAL CERTIFICATION FOR ATTACHMENT A-1	
By signing this document I certify that I am an owner or officer of the company, and I swear under oath that: **All first-tier subcontractors listed on attachment A-1 have verified through a signed statement under oath by an owner or officer that they meet the minimum criteria to be a responsible contractor as defined in Minn. Stat. § 16C.285.**	
Authorized Signature of Owner or Officer:	**Printed Name:**
Title:	**Date:**
Company Name:	

ATTACHMENT A-2

ADDITIONAL SUBCONTRACTORS LIST

PRIME CONTRACTOR TO SUBMIT AS SUBCONTRACTORS ARE ADDED TO THE PROJECT

STATE PROJECT NUMBER: _____

This form must be submitted to the Project Manager or individual as identified in the solicitation document.

Minn. Stat. § 16C.285, Subd. 5. … If a prime contractor or any subcontractor retains additional subcontractors on the project after submitting its verification of compliance, the prime contractor or subcontractor shall obtain verifications of compliance from each additional subcontractor with which it has a direct contractual relationship and shall submit a supplemental verification confirming compliance with subdivision 3, clause (7), within 14 days of retaining the additional subcontractors. …

ADDITIONAL SUBCONTRACTOR NAMES* (Legal name of company as registered with the Secretary of State)	**Name of city where company home office is located**

*Attach additional sheets as needed for submission of all additional subcontractors.

SUPPLEMENTAL CERTIFICATION FOR ATTACHMENT A-2	
By signing this document I certify that I am an owner or officer of the company, and I swear under oath that: **All additional subcontractors listed on Attachment A-2 have verified through a signed statement under oath by an owner or officer that they meet the minimum criteria to be a responsible contractor as defined in Minn. Stat. § 16C.285.**	
Authorized Signature of Owner or Officer:	**Printed Name:**
Title:	**Date:**
Company Name:	

AFFIDAVIT AND INFORMATION REQUIRED OF BIDDERS

Affidavit of Non-Collusion:

I hereby swear (or affirm) under penalty of perjury:

1) That I am the bidder (if the bidder is an individual), a partner in the bidder (if the bidder is a partnership), or an officer or employee of the bidding corporation having authority to sign on its behalf (if the bidder is a corporation);

2) That the attached bid or bids have been arrived at by the bidder independently and have been submitted without collusion with and without agreement, understanding, or planned common course of action with any other vendor of materials, supplies, equipment or services described in the invitation to bid, designed to limit independent bidding or competition;

3) That the contents of the bid or bids have not been communicated by the bidder or its employees or agents to any person not an employee or agent of the bidder or its surety on any bond furnished with the bid or bids and will not be communicated to any such person prior to the official opening of the bid or bids;

4) That a family relationship between a City of Duluth employee and bidder/proposer are in non-collusion; and

5) That I have fully informed myself regarding the accuracy of the statements made in this affidavit.

Signed: _____

Firm Name: _____

Subscribed and sworn to me before this _____ day of _____, _____

NOTARY PUBLIC _____

My commission expires: _____

Bidder's Federal Identification Number _____

EQUAL EMPLOYMENT OPPORTUNITY EEO AFFIRMATIVE ACTION
POLICY STATEMENT & COMPLIANCE CERTIFICATE

TO: City of Duluth, MN PROJECT NUMBER & DESCRIPTION _____

_____

FROM: _____

_____
(Vendor's name, address, telephone number)

A) Employment: It is the policy of the above named FIRM to afford equal opportunity for employment to all individuals regardless of race, color, creed, religion, national origin, ancestry, age, sex, marital status, status with respect to public assistance and/or disability. The FIRM will take affirmative action to ensure that we will: (1) recruit, hire, and promote all job classifications without regard to race, color, creed, religion, national origin, ancestry, age, sex, marital status, status with respect to public assistance, and/or disability, except where sex is a bona fide occupational qualification; (2) base decisions on employment so as to further the principle of equal employment opportunity; (3) ensure that promotion decisions are in accord with the principles of equal employment opportunity by imposing only valid requirements for promotional opportunities; (4) ensure that all personnel actions such as compensation, benefits, transfers, layoffs, return from layoff, FIRM sponsored training, education tuition assistance, social and recreational programs will be administered without regard to race, color, creed, religion, national origin, ancestry, age, sex, marital status, status with respect to public assistance, and/or disability. The FIRM also intends full compliance with Veteran affirmative action requirements. Additionally, minority and female employees shall be encouraged to participate in all FIRM activities and refer applicants.

I have designated (name) _____to direct the establishment of and to monitor the implementation of personnel procedures to guide the FIRM's affirmative action program. Where PROJECTS exceed $500,000, this official shall also serve as the liaison officer that administers the FIRM's "Minority Business Enterprise Program." This official is charged with designing and implementing audit and reporting systems that will keep management informed on a monthly basis of the status of the equal opportunity area.

Supervisors have been made to understand that their work performance is being evaluated on the basis of their equal opportunity efforts and results, as well as other criteria. It shall be the responsibility of the FIRM and its supervisors to take actions to prevent harassment of employees placed through affirmative action efforts.

B) Reports: Unless exempted by law and regulation, the FIRM shall make available and file those reports related to equal opportunity as may be required by the City of Duluth and State and Federal compliance agencies. Requirements and Reports are defined in 41CFR60 "Compliance Responsibility for Equal Opportunity" published by the U. S.Department of Labor which is incorporated herein by reference. Additional requirements are defined in various State and Federal Civil Rights Legislation and Rules promulgated thereunder.

C) Nonsegregated Facilities: The FIRM certifies that it does not maintain or provide for its employees any segregated facilities at any of its establishments and that it does not permit its employees to perform their services at any location, under its control, where segregated facilities are maintained. The FIRM certifies that it will not maintain or provide for its employees any segregated facilities at any of its establishments and that it will not permit its employees to perform their services at any location, under its control, where segregated facilities are maintained. The FIRM agrees that a breach of this certification is a violation of the Equal Opportunity Clause in this certificate. As used in this Certification, the term "segregated

facilities" means any waiting rooms, work area, rest rooms and wash rooms, restaurants and other eating areas, time clocks, locker rooms and other storage or dressing areas, parking lots, drinking fountains, recreation for entertainment area, transportation, and housing facilities provided for employees which are segregated by explicit directive or are, in fact, segregated on the basis of race, color, religion, or national origin, because of habit, local custom, or otherwise.

D) Affirmative Action Compliance Program: Unless exempted by regulation and law, the FIRM–if the FIRM has 50 or more employees and if the value of current contracts with the City of Duluth exceeds $50,000–shall prepare and maintain a written affirmative action compliance program that meets the requirement as set forth in 41CFR60.

E) Non-Compliance: The FIRM certifies that it is not currently in receipt of any outstanding letters of deficiencies, show cause, probable cause, or other such notification of non-compliance with EEO Laws and Regulations.

F) Employment Goals - "Construction" Projects: It shall be the goal of the FIRM if the PROJECT is of a construction nature that in all on-site employment generated that no less than 3% of the on-site workforce will be minority employees and that no less than 7% of the on-site workforce will be female employees. Further, it is the goal of the FIRM if the PROJECT is of a construction nature that in all on-site employment generated that no less than 3% of the work hours generated shall be worked by minority employees and that no less than 7% of the work hours generated shall be worked by female employees.

G) Subcontractors: The FIRM will for all its PROJECT subcontractors regardless of tier (unless exempted by law and regulation) that received in excess of $2,500 require that: (1) the subcontractor shall execute an "EEO Statement and Certification" similar in nature to this "Statement and Certification", (2) said documentation to be maintained on file with the FIRM or subcontractor as may be appropriate.

Executed this _____ day of _____, 20__ by:

_____

Printed name and title

_____

Signature

NOTE: In addition to the various remedies prescribed for violation of Equal Opportunity Laws, the penalty for false statements is prescribed in 18 U.S.C. 1001.

CONTRACTOR
&
CITY OF DULUTH

THIS AGREEMENT, effective as of the date of attestation by the City Clerk, is made by and between the **CITY OF DULUTH**, a municipal corporation, hereinafter referred to as the "CITY," party of the first part, and **Contractor, address,** hereinafter referred to as the "Contractor," party of the second part;

WITNESSETH: That the Contractor and the City agree as follows:

1. The following shall be deemed to be part of this contract:
   a. The annexed resolution and legal advertisement of the City Council.
   b. The bid request and specifications, as modified by irreconcilable language in this written contract.
   c. The bid by Contractor, as modified by irreconcilable language in this written contract.
   d. The performance bond and payment bond certification.
   e. All provisions of law applicable to a contract of this nature.

2. The Contractor agrees to furnish and deliver to the Department all labor, supervision, material, equipment, supplies, insurance, performance bond, payment bond and everything else necessary for general construction of Project at location, all in strict accordance with plans and specifications prepared by design co. or city architect, your bid of $ and resolution no. passed on date. Contractor shall not commence performance of any work under this contract until Contractor receives authorization from the City's Purchasing Agent in writing and dated.

3. The City agrees to pay progress payments and make final payments to the Contractor as stated in the contract specifications. The total amount payable under this contract shall not exceed **dollar amount spelled out ($)** unless the contract is modified by formal amendment or change order. Payments under this Agreement shall be made from the following funding and RQ no. Due to the dollar amount of this contract, a Project Labor Agreement is or is not included as part of this contract (City Code Section 2-29).

4. The Contractor shall furnish and maintain in full force and effect until this contract is completely performed by the Contractor, a performance bond and payment bond if and when required by law, or if and when required by the City.

5. Inasmuch as this contract concerns work, materials and equipment needed for the public benefit, the provisions of this contract relating to the time of performance and completion of work and delivery of materials or equipment are of the essence of this contract.

6. The Contractor will defend, indemnify and save the City harmless from all costs, charges, damages, and loss of any kind that may grow out of the matters covered by this contract.

DRAFT

Said obligation does not include indemnification of the City for claims of liability arising out of the sole negligent or intentional acts or omissions of City but shall include but not be limited to the obligation to defend, indemnify and save harmless the City in all cases where claims of liability against the City arise out of acts or omissions of City which are derivative of the negligence or intentional acts or omissions of Contractor such as, and including but not limited to, the failure to supervise, the failure to warn, the failure to prevent such act or omission by Contractor and any other such source of liability. In addition Contractor will comply with all local, state and federal laws, rules and regulations applicable to this contract and to the work to be done and things to be supplied hereunder.

7. Insurance

a. Contractor shall provide the following minimum amounts of insurance from insurance companies authorized to do business in the state of Minnesota, which insurance shall indemnify Contractor and City from all liability described in Paragraph 6 above, subject to provisions below.

(1) Workers' compensation insurance in accordance with the laws of the State of Minnesota.

(2) Public Liability and Automobile Liability Insurance with limits not less than **$1,500,000** Single Limit, and twice the limits provided when a claim arises out of the release or threatened release of a hazardous substance; shall be in a company approved by the city of Duluth; and shall provide for the following: Liability for Premises, Operations, Completed Operations, Independent Contractors, and Contractual Liability.

(3) City of Duluth shall be named as **Additional Insured** under the Public Liability, Excess/Umbrella Liability* and Automobile Liability, or as an alternate, Contractor may provide Owners-Contractors Protective policy, naming itself and the City of Duluth. Contractor shall also provide evidence of Statutory Minnesota Workers Compensation Insurance. Contractor to provide Certificate of Insurance evidencing such coverage with 30-days' notice of cancellation, non-renewal or material change provisions included. The City of Duluth does not represent or guarantee that these types or limits of coverage are adequate to protect the Contractor's interests and liabilities.

**An umbrella policy with a "following form" provision is acceptable if written verification is provided that the underlying policy names the City of Duluth as an additional insured.*

(4) If a certificate of insurance is provided, the form of the certificate shall contain an unconditional requirement that the insurer notify the City without fail not less than 30 days' prior to any cancellation, non-renewal or modification of the policy or coverages evidenced by said certificate and shall further provide that failure to give such notice to City will render any such change or changes in said policy or coverages ineffective as against the City.

(5) The use of an "ACORD" form as a certificate of insurance shall be accompanied by two forms – 1) ISO Additional Insured Endorsement (CG-2010 pre-2004) and 2) Notice of Cancellation Endorsement (IL 7002) or equivalent, as approved by the Duluth City Attorney's Office.

b. The insurance required herein shall be maintained in full force and effect during the life of this Agreement and shall protect Contractor, its employees, agents and representatives from claims and damages including but not limited to personal injury and death and any act or failure to act by Contractor, its employees, agents and representatives in the negligent performance of work covered by this Agreement.

c. Certificates showing that Contractor is carrying the above described insurance in the specified amounts shall be furnished to the City prior to the execution of this Contract and a certificate showing continued maintenance of such insurance shall be on file with the City during the term of this Contract.

d. Contractor shall be required to provide insurance meeting the requirements of this Paragraph 7 unless Contractor successfully demonstrates to the satisfaction of the City Attorney, in the exercise of his or her discretion, that such insurance is not reasonably available in the market. If Contractor demonstrates to the satisfaction of the City Attorney that such insurance is not reasonably available, the City Attorney may approve an alternative form of insurance which is reasonably available in the market which he or she deems to provide the highest level of insurance protection to the City which is reasonably available.

8. No claim whatsoever shall be made by the Contractor against any officer, agent or employee of the City for, or on account of, anything done, or omitted to be done, in connection with this contract. If this contract is not made in conformity with mandatory provisions of any statute or of the ordinances and charter of the City of Duluth, the Contractor agrees to raise no defense and make no claim against the City on the basis of ratification, laches, estoppel, or implied contract.

9. The Contractor shall not assign, transfer, convey or otherwise dispose of this contract, or his right to execute it, or his right, title or interest in or to it, or any part thereof, without the consent of the City, evidenced by a resolution duly adopted by the City Council. The prohibition contained in this paragraph shall not be deemed to prevent the contractor from subcontracting. Contractor shall remain primarily responsible for all work performed by any subcontractor.

10. The Contractor agrees that in the hiring of common or skilled labor for the performance of any work under this contract, Contractor will not discriminate by reason of race, creed or color, religion, national origin, sex, marital status, status with regard to public assistance, disability or age.

11. The Contractor agrees that Contractor shall not in any manner discriminate against or intimidate or prevent the employment of any person or persons, or on being hired, prevent or conspire to prevent any person or persons from the performance or work under this contract on account of race, creed or color, religion, national origin, sex, marital status, status with regard to public assistance, disability or age.

12. The contractor agrees that, as provided in Minnesota Statutes 16C.05, Subd. 5, contractor's books, records, documents, and accounting procedures and practices are subject to examination by the City or the state auditor for six years from the date of final payment under this contract.

13. This contract may be cancelled or terminated by the City and all moneys due or to become due hereunder may be forfeited for any failure to perform any terms or conditions of this contract including but not limited to any violation of the terms or conditions of Section 10 or 11 of this contract.

14. Any waiver by any party of any provision of this contract shall not imply a subsequent waiver of that or any other provision.

15. This contract is made in the state of Minnesota and shall be construed and interpreted in accordance with the laws of the State of Minnesota. The appropriate venue and jurisdiction for any litigation hereunder shall be in a court located in St. Louis, County, Minnesota, and the parties to this Agreement waive objection to the jurisdiction of this court, whether based on convenience or otherwise.

16. This Agreement constitutes the entire agreement between the City and the Contractor on the subject matter hereof. It may not be changed, modified, discharged or extended except by written instrument duly executed on behalf of the City and the Contractor. The Contractor agrees that no representations or warranties made by the City shall be binding upon the City unless expressed in writing herein.

17. This Agreement shall not be in force and effect, or in any way binding upon the City until the same shall have been approved by the Department Head, signed by the Mayor, attested by the Clerk, and countersigned by the City Auditor.

18. The Contractor unconditionally guarantees to perform all work pursuant to this contract in a good and workmanlike manner, in strict compliance with the specifications and instructions hereto attached, and to the satisfaction of the City of Duluth.

19. This Agreement may be executed in counterparts, each of which shall be deemed to be original and all of which together shall constitute the binding and enforceable agreement of the parties hereto. This Agreement may be executed and delivered by a party by facsimile or PDF transmission, which transmission copy shall be considered an original and shall be binding and enforceable against such party.

Countersigned:

_____
City Auditor
Approved this_____day of _____

_____
Department Director
Approved this_____day of _____

_____
Purchasing Agent
Approved this_____day of _____

_____
Assistant City Attorney
Approved this_____day of _____

CITY OF DULUTH-Client

By

_____
Mayor

Attest:

_____
City Clerk
Attested this_____day of _____

CONTRACTOR/COMPANY
Contractor

By

_____
Company Representative

Its

_____
Title of Representative
Approved this_____day of _____

CITY OF DULUTH - PART II -

SUPPLEMENTARY GENERAL CONDITIONS FOR FEDERALLY, STATE OF MINNESOTA, AND/OR CITY ASSISTED ACTIVITIES

(revised 4/15/11)

The following conditions take precedence over any conflicting conditions in this Contract.

Section	Title
1	Restrictions on Disbursements, Subcontractors Federal Agency Requirements, Separability, Property
2	Miscellaneous Provisions
3	Definitions
4	Environmental Provisions
5	Contract Compliance
6	Records, Reports and Information, Audits and Inspections
7	Conflict of Interest and Lobbying
8	Labor Standards - Physical Improvement Projects
9	Minnesota Department of Transportation Specification 1960 Partial Payments
10	Housing and Urban Development (HUD) Section 4010
11	Equal Opportunity and Affirmative Action
12	Employment Opportunities - "HUD Section 3"
13	Federal Requirements for Minority/Women Business Enterprises Contract Guidance - MPFA
14	Forms

E-Mail Addresses

For ease in communication, the e-mail address of the person(s) responsible for preparing certified payroll reports (CPRs) is required from the prime contractor and all subcontractors (regardless of tier). This information will be provided to the project engineer prior to the pre-construction meeting OR with materials required in the Letter of Intent.

Section I

Restrictions on Disbursements

No money under this Contract shall be disbursed by the City to any Contractor except pursuant to a written contract which incorporates the applicable PART II, Supplementary General Conditions for Federally, State of Minnesota, and/or City Assisted Activities, and unless the Contractor is in compliance with the Federal Agency requirements with regard to accounting and fiscal matters to the extent they are applicable.

Subcontractors

(A) The Contractor shall include in any subcontract the clauses set forth in the PART II, Supplementary General Conditions for Federally, State of Minnesota and/or City Assisted Activities in their entirety and also a clause requiring the subcontractors to include these clauses in any lower tier subcontracts which they may enter into, together with a clause requiring this insertion in any further subcontracts that may in turn be made.

(B) The Contractor shall not subcontract any part of the work covered by this Contract or permit subcontracted work to be further subcontracted without the City's prior written approval of the subcontractors. The City will not approve any subcontractor for work covered by this Contract who is at the time ineligible under the provisions of any applicable regulations issued by a Federal Agency or the Secretary of Labor, United States Department of Labor, to receive an award of such subcontract.

Federal Agency Requirements

Unearned payments under this Contract may be suspended or terminated upon refusal to accept any additional conditions that may be imposed by the Federal Agency at any time; or if the grant, if applicable, to the City under which this Contract is made is suspended or terminated.

Separability

If any provisions of this Contract is held invalid, the remainder of this Contract shall not be affected thereby if such remainder would then continue to conform to the terms and requirements of applicable law.

Property

Acquisition, use, and disposal of all property, materials and goods acquired as a result of activities made possible by this Contract shall be accomplished in accordance with the applicable provisions of Federal Management Circular (FMC)-74-7, as amended.

Section 2

Miscellaneous Provisions

(A) **Copyrights.** In the event this Contract results in a book or other copyrightable material, the author is free to copyright the work, but Federal Agency and the City reserve a royalty-free, nonexclusive, and irrevocable license to reproduce, publish or otherwise use, all copyrighted material and all material which can be copyrighted.

(B) **Patents.** Any discovery or invention arising out of or developed in the course of work aided by this Contract shall be promptly and fully reported to the Federal Agency and the City for determination by the Federal Agency as to whether patent protection on such invention or discovery shall be sought and how the rights in the invention or discovery, including rights under any patent issued thereon, shall be disposed of and administered in order to protect the public interests.

(C) **Political Activity Prohibited.** None of the funds, materials, property or services provided directly or indirectly under this Contract shall be used in the performance of this Contract on any partisan political activity, or to further the election or defeat of any candidate for public office.

(D) **Lobbying Prohibited.** None of the funds under this Contract shall be used for publicity or propaganda purposes designed to support or defeat legislation pending before the Congress or the City.

(E) **Prohibition of and Elimination of Lead-Based Paint Hazard.** Notwithstanding any other provision, the Agency and Contractor agree to comply with the regulation issued by the Secretary of Housing and Urban Development set forth in 37 F. R. 22732-3 and all applicable rules and orders issued thereunder which prohibit the use of lead-based paint in residential structures undergoing Federally assisted construction or rehabilitation and require the elimination of lead-based paint hazards. Every contract or subcontract, including paint, pursuant to which such Federally assisted construction or rehabilitation is performed shall include appropriate provisions prohibiting the use of lead-based paint.

(F) **Architectural Barriers Act.** The design for and construction of any facility funded in whole or in part by this Contract shall be in conformance with the American Standard Specification for Making Buildings and Facilities Accessible and Usable by the Physically Handicapped, Number A-117.1-1971, as modified.

(G) **Relocation and Acquisition.** Any relocation or acquisition resulting from activities funded in whole or in part by this Contract shall be in conformance with the provisions of the Uniform Relocation Assistance and Real Property Acquisition Policies Act of 1970 (40 U.S.C. 4601) and the implementing regulations 24CFR Part 42.

(H) **Prohibition Against Payments of Bonus or Commission.** The assistance provided under this Contract shall not be used in the payment of any bonus or commission for the purpose of obtaining Federal Agency approval for such assistance, or Federal Agency approval of applications for additional assistance, or any other approval or concurrence of a Federal Agency required under this Contract, Federal Law or Federal Regulations thereto; provided, however, that reasonable fees or bonafide technical, consultant, managerial or other such services, other than actual solicitation, are not hereby prohibited if otherwise eligible as project costs.

(I) **Hatch Act.** Where applicable, the Contractor will comply with the provisions of the Hatch Act which limits the political activity of the Contractor's employees.

Section 3
Definitions

(A) City means the City of Duluth, Contracting Officer, or other persons authorized to act on behalf of the City of Duluth.

(B) Contracting Officer is the delegated representative of the City who has the responsibility for administering the Project.

(C) Contractor means an entity, whether public or private, which furnishes (other than standard commercial supplies, office space or printing services) to the City, products, services or supplies as described in this project Contract.

(D) Federal Agency means the United States, the District of Columbia, and any executive department, independent establishment, administrative agency, or instrumentality of the United States or of the District of Columbia, including any corporation, all or substantially all of the stock of which is beneficially owned by the United States, by the District of Columbia, or by any of the foregoing departments, establishments, agencies, and instrumentalities. The term Federal Agency shall also include the person or persons authorized to act on behalf of said Federal Agency.

(E) Project means the activities to be undertaken by the Contractor as described in this Contract, which from time to time may be amended by mutual consent of the City and Contractor.

(F) Subcontractor means an entity, regardless of tier, which has entered into an agreement with the Contractor or another Subcontractor, to undertake certain Project activities as described in that agreement.

(G) The term labor standards, as used in the Contract, means the requirements of the Davis-Bacon Act, the Contract Work Hours and Safety Standards Act (other than those relating to safety and health), the Copeland Act, and the prevailing wage provisions of the other statutes listed in 20 CFR 5.1.

(H) Work means all labor necessary to produce the construction required by the Contract Documents, all materials and equipment incorporated or to be incorporated in such construction, products, services, or supplies required by the Contract Documents, or any other requirements set forth in the Contract.

(I) Additional Definitions, that are applicable to the Labor Standards provisions - Section 8 - of this Contract can be found in 29CFR5.2 as published by the U.S. Department of Labor and said definitions are hereby incorporated by reference into the provisions of this Contract.

Section 4
Environmental Provisions

(A) The Contractor agrees to follow the regulations, requirements, policies, goals and procedures set forth by the Council on Environmental Quality (CEQ) under provisions of the National Environmental Policy Act (NEPA) (Pub. L 91-190, 42 U.S.C. 4321 et seq.), Executive Order 11514, and 40 CFR Part 1500.

(B) **Historic Properties.** The Contractor agrees to follow the regulations, requirements, policies, goals, and procedures set forth under provisions of the National Historic Preservation Act of 1966 (Pub. L. 89-665); Preservation of Historic and Archeological Data Act of 1974 (Pub. L. 93-291); Executive Order 11593; 36 CFR , Part 800 and applicable State legislation or regulations.

(C) **Coastal Zones and Wetlands.** The Contractor agrees to follow the regulations, requirements, policies, goals and procedures set forth under provisions of the Coastal Zone Management Act of 1972 (Pub. L. 92-583) and applicable State legislation or regulations.

(D) **Noise.** The Contractor agrees to comply with provisions set forth in the U.S. Department of Housing and Urban Development Handbook 1390.2, Noise Abatement and Control, Department Policy, Responsibility and Standards, 1971.

(E) **Flood Plain.** The Contractor agrees to comply with the provisions set forth in the Flood Disaster Protection Act of 1973 (Pub. L. 93-234) and implementing regulations; Title 24, Chapter X, Subchapter B, National Flood Insurance Program, Executive Order 11296, and Executive Order 11988 relating to the evaluation of flood hazards.

(F) **Air Quality.** The Contractor agrees to comply with provisions set forth in the Clean Air Act (Pub. L. 90-148) and Clean Air Act Amendments of 1970 (Pub. L. 91-604); and applicable U.S. Environmental Protection Agency implementing regulations.

(G) **Water Quality.** The Contractor agrees to comply with the provisions set forth in the Federal Water Pollution Control Act (Pub. L. 92-500) and applicable U.S. Environmental Protection Agency implementing regulations, and Executive Order 11288 relating to the prevention, control, and abatement of water pollution.

(H) **Wildlife.** The Contractor agrees to comply with the provisions of the Fish and Wildlife Coordination Act (Pub. L. 85-264).

Section 5
Contract Compliance

(A) In the event of the Contractor's noncompliance with the provisions of this Contract or with any of the said regulations, the City may withhold payment(s) until evidence of compliance by the Contractor has been demonstrated, or the Contract may be canceled, terminated or suspended in whole or in part and the Contractor may be declared ineligible for further City contracts.

(B) In the event the Contract is terminated or canceled as a result of noncompliance with any of the provisions of this Contract, the City may subject to bids the remainder of the Project for which this Contract was made. The City shall have the right upon termination or suspension to withhold all further payments under this

Contract to the Contractor. Upon the award of a new contract for the remainder of the Project, the City shall pay to the Contractor an amount no more than the balance remaining due to the Contractor less the sum of the costs incurred by the City which are necessary in preparing the new bid specifications. In the event the amount paid the Contractor prior to the date of termination or cancellation exceeds the full amount of this Contract less the cost of the new contract and the additional costs mentioned above, the Contractor agrees to reimburse the City for such excess amount within ninety days after the new contract is awarded by the above procedures.

(C) Provisions contained in subparagraph (A) and (B) above shall not be interpreted as precluding any authorized Federal, State, or County governmental unit from exercising their legal administrative or other responsibilities in respect to the enforcement by said governmental units of laws or regulations concerning activities of the Contractor.

Section 6

Records

(A) **Establishment and Maintenance of Records.** Records shall be maintained in accordance with requirements prescribed by the Federal Agency or the City with respect to all matters covered by this Contract. Except as otherwise authorized by the Federal Agency, such records shall be maintained for a period of three years after receipt of final payment under this Contract.

(B) **Documentation of Costs.** All costs shall be supported by properly executed payrolls, time records, invoices, contracts, or vouchers, or other official documentation evidencing in proper detail the nature and propriety of the charges. All checks, payrolls, invoices, contracts, vouchers, orders, or other accounting documents pertaining in whole or in part to this Contract shall be clearly identified and readily accessible.

Reports and Information

At such times and in such forms as the Federal Agency or the City may require, there shall be furnished to the Federal Agency or the City such statements, records, data and information as the Federal Agency or the City may request pertaining to matters covered by this Contract.

Audits and Inspection

At any time during normal business hours and as often as the City, the Federal Agency and/or the Comptroller General of the United States may deem necessary, there shall be made available to the City, the Federal Agency and/or representatives of the Comptroller General for examination of all its records with respect to all matters covered by this Contract and will permit the City, the Federal Agency and/or representative of the Comptroller General to audit, examine and make excerpts or transcripts from such records, and to make audits of all contracts, invoices, materials, payrolls, records of personnel, conditions of employment, and other data relating to all matters covered by this Contract.

Section 7

Conflict of Interest and Lobbying

(A) **Interest of Members, Officers, or Employees of the City, Members of Local Governing Body, or Other Public Officials.** No member, officer, or employee of the City, or its designees or agents, or member of the governing body of the City, during his/her tenure of for one year thereafter, shall have any interest, direct or indirect in any contract or subcontract, or the proceeds thereof, for work to be performed in connection with the Project assisted under this Contract. Any contract in which any of the above indicated individuals becomes directly or indirectly, interested, personally or as a member of a firm, or as an officer, director, or stockholder of a corporation, shall be and become absolutely void; and any money which shall have been paid on such contract by the City may be recovered back from any or all persons interested therein, by a joint action or several actions.

(B) The Contractor agrees that he will incorporate into every contract required to be in writing the following provisions: **Interest of Contractors and Employees** - The Contractor covenants that he presently has no interest and shall not acquire any interest, direct or indirect, in the Project which would conflict in any manner or degree with the performance of this Contract, and no person having any conflicting interest shall be employed. Any interest on the part of the Contractor or his employees must be disclosed to the Federal Agency and the City. Provided, however, that this paragraph shall be interpreted in such a manner so as not to unreasonably impede any statutory requirements that opportunity be provided for employment of and participation by certain residents of a designated geographical are, if applicable.

(C) **Interest of Member or of Delegate to Congress.** No member of or Delegate to Congress, or Resident Commissioner, shall be admitted to any share or part of this Contract or to any benefit that may arise therefrom, but this provision shall not be construed to extend to this Contract if made with a corporation for its general benefit.

(D) The Contractor by signing this document certifies, to the best of his or her knowledge and belief, that:

(1) No Federal appropriated funds have been paid or will be paid, by or on behalf of the Contractor, to any person for influencing or attempting to influence an officer or employee of any agency, a Member of Congress, an officer or employee of Congress, or an employee of a Member of Congress in connection with the awarding of any Federal contract, the making of any Federal grant, the making of any Federal loan, the entering into of any cooperative agreement, and the extension, continuation, renewal, amendment, or modification of any Federal contract, grant, loan, or cooperative agreement.

(2) If any funds other than Federal appropriated funds have been paid or will be paid to any person for influencing or attempting to influence an officer or employee of any agency, a member of Congress, an officer or employee of Congress, or an employee of a Member of Congress in connection with this Federal contract, grant, loan, or cooperative agreement, the Contractor shall complete and submit Standard Form -LLL, "Disclosure Form to Report Lobbying," in accordance with its instructions.

The above certification is a material representation of fact upon which reliance was placed when this transaction was made or entered into. Submission of this certification is a prerequisite for making or entering into this transaction imposed by section 1332, title 31, U.S. Code. Any person who fails to file the required certification shall be subject to a civil penalty of not less than $10,000 and not more than $100,000 for each such failure.

(E) The parties to this Contract certify and agree that they are under no contractual or other disability which would prevent them from complying with the terms of this Contract.

Section 8

Labor Standards - Physical Improvement Projects

Where applicable, there shall be included in all construction, rehabilitation, alteration or repair contracts with private entities made possible by or resulting from this Contract, the following Labor Standards provisions;

(A) **General Requirements.**

(1) **Subcontracts.** The Contractor shall include in any subcontract the clauses set forth in Section 8, **Labor Standards**, in their entirety and also a clause requiring the subcontractors to include these clauses in any Tower tier subcontract which they may enter into, together with a clause requiring this insertion in any further subcontracts that may in turn be made.

(2) The transporting of materials and supplies to or from the site of the Project or Program to which this Contract pertains by the Employees of the Contractor or of any subcontractor, and the manufacturing or furnishing of materials, articles, supplies, or equipment on the site of the Project or Program to which this Contract pertains by persons employed by the Contractor or by any subcontractor, shall for the purpose of this Contract, and without limiting the generality of the foregoing provisions of this Contract, be deemed to be work to which these **Labor Standards** provisions are applicable.

(3) No person under the age of eighteen years shall be employed on work covered by this Contract.

(4) In connection with the performance of work under this Contract, the Contractor agrees not to employ any person undergoing sentence of imprisonment except as provided by Public Law 89-176, September 10, 1955 (18 U.S.C. 4082 (c) (2)) and Executive Order 11755, December 29, 1973.

(5) The Contractor will permit authorized representatives of the Federal Agency and the City to interview employees during working hours on the job.

(6) No employee to whom the wage, salary, or other **Labor Standards** provisions of this Contract are applicable shall be discharged or in any other manner discriminated against by the Contractor or any subcontractor because such employee has filed any complaint or instituted or caused to be instituted any proceeding or has testified or is about to testify in any proceeding under or relating to the Labor Standards applicable under this Contract to his employer.

(B) **Safety Standards.** No Contractor or subcontractor contracting for any part of a construction contract shall require any laborer or mechanic, including apprentices and trainees, employed in the performance of the Contract to work in surroundings or under working conditions which are unsanitary, hazardous or dangerous to his health or safety, as determined under construction safety and health standards promulgated by the Secretary of Labor. The Contractor or subcontractor comply with all the rules, regulations, and relevant orders, promulgated by the Secretary of Labor pursuant to Public Law 91-54.

(C) **Davis-Bacon Act - 29 CFR 5.5**

web site: http://ecfr.gpoaccess.gov/cgi/t/text/text-idx?c=ecfr&tpl=/ecfrbrowse/Title29/29cfr5_main_02.tpl

Refer to Section 10, Page 10 Housing and Urban Development (HUD) form-4010 (06/2009) Ref Handbook 1344.1

City of Duluth "Mini Davis-Bacon"

(D) **City of Duluth - Minimum Wage Ordinance 8940, as Amended.**

(1) On a project (as defined below) funded in whole or in part by federal and/or state funds and/or city of Duluth funds, these local provisions shall prevail in those instances where the requirements of the local provisions are equal to or greater than similar minimum labor standards provisions as set forth in applicable federal and/or state laws and regulations.

(2) In all contracts in excess of $2,000 for projects (as defined below), the Contractor's particular attention is called to Ordinance 8940, effective June 8, 1989, respectively coded as Article IV of Chapter 2 of the Duluth City Code, and entitled "An Ordinance Pertaining to Wages and Working Hours of Persons on Public Works in the City of Duluth", as set forth below:

(3) **Definitions.**

For the purposes of this section the following words and phrases shall have the meanings respectively ascribed to them in this section:

(a) **Basic hourly rate** - The hourly wage paid to any employee.

(b) **Prevailing wage rate** - The basic hourly rate plus fringe benefits prevailing in the city of Duluth as determined by the United States secretary of labor pursuant to the Davis-Bacon act, as amended; provided that whenever employer and employee organizations employing and representing a majority of a class of workers in a particular industry within the city jointly certify that the prevailing basic hourly rate plus fringe benefits of such workers differs from the amount determined by the secretary of labor, the certified rate shall be considered to be the prevailing wage rate for such class of workers in that industry.

(c) **Fringe benefits** - Employer contribution for health and welfare benefits, vacation benefits, pension benefits, and all other economic benefits other than the basic hourly rate.

(d) **Apprentice** - An employee who is working under a training program which is approved either by the U.S. Department of Labor Bureau of Apprenticeship & Training or the Minnesota Director of Voluntary Apprenticeship; see apprentice ratios on pages 6-7 and HUD 4010 in Section 10.

(e) **Trainee** - An employee registered with the U. S. Department of Labor Employment & Training Administration; see HUD 4010 in Section 10.

(e) **Project** - Erection, construction, demolition, painting, remodeling or repairing of any public building, highway, sidewalk, bridge, water or gas line, sewer and sewage treatment facility or other public work performed under contract with the city.

(f) **Labor, mechanic** - All persons utilized, employed or working on a project who are doing work usually done by mechanics and laborers, including proprietors, partners, and members of cooperatives.

(4) **Wage Rates and Hours for City of Duluth Projects.**

(a) Any contract which provides for a project of estimated total cost of over $2,000.00 shall contain a stipulation that no laborer, mechanic or apprentice-trainee employed directly upon the project work site by the contractor or any subcontractor shall be permitted or required to work at a rate of pay less than the prevailing wage rate; nor shall any such employee be permitted or required to work more than 8 hours in any work day **OR** 40 hours in any work week unless he is paid at a rate of at least 1½ times the basic hourly rate for all hours in excess of 8 per day **OR** 40 per week [in other words: all hours in excess of eight per day and all hours after 40 per week] and unless he receives fringe benefits that are at least equal to those in the prevailing wage rate; provided that whenever employer and employee organizations employing and representing a majority of a class of workers in a particular industry within the city jointly certify that the maximum number of hours that such persons may work under existing labor agreements before overtime wages must be paid differs from the hours specified in this paragraph, the maximum number of hours specified in such labor agreements shall be substituted for those specified above in applying the provisions of this paragraph to such workers.

(b) The word "or" in the state statute and the city of Duluth Code refers to the number of hours worked in any one week or, in the alternative, the number of hours worked in any one day in the week (the days in one week being totaled for reporting purposes); the law requires use of the alternative which results in the higher number of overtime hours for each employee whose time is being reported.

EXCEPTIONS: Federal government funding only and HUD (Housing and Urban Development) funding - see point "e'

In summary, if a project is solely funded with city of Duluth monies, city ordinance 8940 as amended allows the employees to work four ten-hour days and be paid at the regular hourly rate for those ten hours; exceeding hours must be paid at the overtime rate. An employer may not withhold overtime payment exclusively until 40 hours per week have been worked. Daily overtime must be paid as it is earned.

- **The base workweek hours must be clearly indicated on each payroll. Employees may be assigned a different workweek; however, that must be clearly marked beside the employees' names.**

The following are examples of how these rules apply to different situations.

TT refers to the total time worked on the day or in the week
RT refers to the hours worked at the regular rate of pay (straight time)
OT refers to the hours worked for which overtime must be paid

State Funded with or without federal funding Projects — City-only Funded Projects (4 ten-hour days)

	Mon	Tues	Wed	Thurs	Fri	Sat	Total		Mon	Tues	Wed	Thurs	Fri	Sat	Total
TT	10	10	10	10	0	6	46		10	10	10	10	0	6	46
RT	8	8	8	8	0	6	38		10	10	10	10	0	0	40
OT	2	2	2	2	0	0	8		0	0	0	0	0	6	6

State Funded with or without federal funding Projects — City-only Funded Projects (4 ten-hour days)

	Mon	Tues	Wed	Thurs	Fri	Sat	Total		Mon	Tues	Wed	Thurs	Fri	Sat	Total
TT	0	10	10	0	7	0	27		10	0	12	0	0	0	32
RT	0	8	8	0	7	0	23		10	0	10	10	0	0	30
OT	0	2	2	0	0	0	4		0	0	2	0	0	0	2

c) **Overtime Calculations**

Minnesota Statutes Chapter 177.42, subd 4 specifies that the prevailing hours of labor may not be more than eight hours per day or more than 40 hours per week (as stated above in (b), the City of Duluth does allow for ten hours per day/40 hours per week with City funding *only*. Example: hours exceeding eight per day are paid at 1.5 times the rate in the contract's wage decision OR the base rate the employee is being paid if it is higher than the required base rate; once 40-hours in any one week are attained, all hours exceeding that 40 are paid at 1.5 times the rate in the project contract's wage decision. See example (1) and (2) below.

Minnesota Statutes Chapter 177.42, subd 5 defines the hourly basic rate as the hourly wage paid to any employee. (subd 6): The prevailing wage rate means the hourly basic rate of pay plus the contribution for health and welfare benefits, vacation benefits, pension benefits, and any other economic benefit paid to the largest number of workers engaged in the same class of labor within the area...

Minnesota Statutes Chapter 177.43, subd 1 (1) ...employees are permitted to work more hours than the prevailing hours of labor [being] paid for all hours in excess of the prevailing hours at a rate of at least 1-½ times the hourly basic rate of pay. (2) A laborer or mechanic may not be paid a lesser rate of wages than the prevailing wage rate in the same or most similar trade or occupation in the area.

An employer may pay a lower **regular time/straight time** hourly rate and higher fringe benefit rate--to a bona fide plan--than stated in the contract's wage decision providing the total of the two rates is equal to or greater than the total in the wage decision; however, the **OVERTIME rate** must be paid on the higher rate in the contract's wage decision.

(1) Overtime Calculation with Fringe Benefits Paid to Bona Fide Plans

For overtime purposes, an employer paying higher fringe benefits to a bona fide plan and paying a lower hourly rate MUST calculate the overtime on the higher hourly rate as stated in the project contract's wage decision. The fringe benefit amount may be reduced to reflect any increase in the total prevailing wage package IF the plan administrator permits such a reduction. This acceptance must be verified in writing by the plan administrator and attached to the appropriate certified payroll report.

(2) Overtime Calculation with Cash Payment of Fringe Benefits

When the fringe benefit is paid directly to an employee, the prevailing base rate and the fringe benefit rate as established in the project contract's wage decision for a specific classification are totaled to arrive at the hourly rate. *Overtime is calculated at 1.5 x the base rate of the wage decision with the fringe benefit amount added to that rate: base rate of the wage decision x 1.5 + fringe benefit rate = overtime rate.*

Contract Work Hours and Safety Standards Act

[Refer to page two of this document.] All projects valued at $100,000 or greater are subject to this Act. As with Minnesota Statutes Chapter 177.43, the overtime rate is calculated as in items one and two above OR (e) below.

(d) A contractor shall not reduce a worker's private, regular rate of pay when the wage rate certified by the U. S. Department of Labor or the Minnesota Department of Labor & Industry is less than the worker's normal hourly wage [Minnesota Statute 181.03 subdivision 1(2)].

(e) **Regular Time & Overtime Definitions**

• **State of Minnesota** funded projects with or without federal funding *only allow for five eight-hour days per week at regular time.* Overtime is calculated at a rate not less than time and one-half (1.5) of the prevailing base rate as stated in the wage decision OR the base rate the employee is being paid if it is higher than the required base rate--plus the straight time fringe benefit amount. (see (1) above for example when a lower base rate and higher fringe are paid)

• **City of Duluth** funded projects do permit four ten-hour work days at regular time–see point 4-a, b for stipulations. Overtime is calculated at a rate not less than time and one-half (1.5) of the prevailing base rate as stated in the wage decision--OR the base rate the employee is being paid if it is higher than the required base rate--plus the straight time fringe benefit amount. (see (1) above for example when a lower base rate and higher fringe are paid)

• **Federal** funded only projects allow overtime pay for hours worked in excess of 40 in a workweek at a rate not less than time and one-half (1.5) of the prevailing base rate as stated in the wage decision OR the base rate the employee is being paid if it is higher than the required base rate--plus the straight time fringe benefit amount.

• **HUD** funded projects allow overtime pay for hours worked in excess of 40 in a workweek at a rate not less than time and one-half (1.5) of the prevailing base rate as stated in the wage decision OR the base rate the employee is being paid if it is higher than the required base rate--plus the straight time fringe benefit amount.

** When a combination of funding sources are included in any one project, the most strict requirements will apply.

(f) The minimum hourly prevailing wages are contained in each project specification. When both federal (general decision rates from the U. S. Department of Labor) and State of Minnesota prevailing wages for state funded construction projects from the Minnesota Department of Labor and Industry are used, the prime contractor and all subcontractors including trucking operations, are required to **pay the higher of the two wages** for all laborers and mechanics [MnDOT Contract Administration Manual, Section 5-591.320].

(g) The prime contractor and any lower-tier subcontractor shall review all wage decisions and compensate a worker according to the type of work performed and at the rate that is the greatest.

(h) State of Minnesota prevailing wages typically list two rates for each classification with two effective dates. Should any City of Duluth contract continue to and past the second effective date, that rate and fringe benefit will be in effect through the remainder of the project.

(i) **Mn/DOT Statement of Compliance is required on all city of Duluth construction projects (regardless of the project funding source) with each weekly certified payroll report.** web site: http://dot.state.mn.us/const/labor/forms.html

(j) All contracts for city projects shall have applicable schedules of prevailing wage rates set forth in the contract. Schedules of applicable prevailing wage rates shall be posted on all project job sites for public review and shall be protected from the weather.

(k) Employees on projects shall be paid at least **weekly**. Fringe benefits shall be paid either in cash or to an employee benefit plan that has been approved by the U.S. Department of Labor. ■ **The fringe benefit package is an integral portion of the prevailing wage. Should the prime contractor or any subcontractor (regardless of tier) become delinquent with any fringe benefit plan administrator's requirements for monthly payment, the monthly estimate(s) may be withheld until the plan payments are made current.** (city ordinance 8940 6-18-89 plus amendments)
See MnDOT Specification 1906 on page nine and Section 5 of this document: Contract Compliance.
See Statement of Compliance and Certified Payroll Report requirements in Section 10, HUD 4010 and web sites in Section 14, Forms.

(l) Any contractor or subcontractor working on a project shall furnish the City with **original** certified payroll reports with **original signatures** relating to the project. Such certified payroll reports shall be **submitted weekly** on U.S. Department of Labor standard forms (WH-347) or their equivalent–using the same format--to the City of Duluth Labor Standards representative. All City of Duluth funded projects must have the base workweek hours indicated on the certified payroll form and/or beside each employee's name (should some employees be working different base workweeks).

(m) No contractor or subcontractor working on a project shall evade or attempt to evade the provisions of this section through the use of non-recognized training programs. The only employees involved in training programs that shall be allowed to work on projects covered by this section shall be apprentice-trainees as defined by this article.

(n) Any person violating the provisions of this section shall be guilty of a misdemeanor with each day of violation constituting a separate offense. In addition, if the prevailing wage rate and accompanying fringe benefit rate is not paid to employees working on a project, the City of Duluth may withhold contract payments to the prime contractor until such deficiencies are corrected. Should fringe benefits be paid to authorized Plans, the payments must be made within the demands of those Plans. Delinquencies may result in withholding of project funds to the prime contractor.

(o) This section shall not apply to contracts for projects where the total cost of the project is less than $2,000.00; nor to materialmen who do no more than deliver materials to the work site, **except** that this section shall apply to employees who deliver asphalt, concrete or mineral aggregate such as sand, gravel or stone where such material is incorporated into the project by depositing the material substantially in place, either directly or through spreaders, from the transporting vehicle.

(5) **Helpers**

A helper may perform work *only* if the helper classification is specified and defined in the federal wage decision and/or State of Minnesota wage decision incorporated into the project contract. Without such a helper classification, the contractor must assign a job classification that is the "same or most similar" [Minnesota Statute 177.44, subdivision 1] and compensate the helper for the actual work performed regardless of the helper's skill level.

(6) **Apprentice Ratios**

Journeyworkers must be on site with the apprentices and their hours must match.

FUNDING SOURCE:

City of Duluth and State of Minnesota with or without Federal funding

- Apprentices are not permitted to work alone under any circumstances.
- Working foremen are acceptable as a journeyworker PROVIDING he/she is in the same classification.
  - » Example: carpenter foreman and carpenter apprentice
- Ratios are determined by the trade's labor agreement.
- In the absence of ratio language, the following State of Minnesota apprenticeship ratios will be applied:
  (apprentice : journeyworker) 1:1 2:4 3:7 4:10, etc.

- Employees working in excess of the allowable ratio must be paid the full journeyworker compensation.
- Out-of-ratio apprentices will be calculated beginning with the **apprentice at the highest level of training** and, then, to less senior apprentices in their rank order.
- Should two or more out-of-ratio apprentices have the same level of training, whomever was on the work site first will receive journeyworker pay; if the apprentices at the same level of training began work on the project site at the same time, hours worked out-of-ratio for which restitution is due will be divided among those apprentices.

Examples:

Four apprentices working unsupervised are on site. [4:0]
Ratio calls for four apprentices and ten journeyworkers [4:10]
Correction: all apprentices will receive the full journeyworker compensation as apprentices are not permitted to work alone.

Three apprentices and two journeyworkers are on site. [3:2]
Ratio calls for three apprentices and seven journeyworkers [3:7]
Two journeyworkers may accompany only one apprentice; therefore, the two highest level apprentices are paid the full journeyworker compensation.
Even though this particular job has three apprentices–the second journeyworker is a mute point; a third journeyworker would also be a mute point in this example.
Correction: the two highest level apprentices are paid the full journeyworker compensation and the third lower level apprentice is considered in ratio.

H U D (CDBG) and Federal funding only

- Apprentices are not permitted to work alone unless the U. S. Department of Labor-approved agreement allows that practice.
- Working foremen are acceptable as a journeyworker PROVIDING he/she is in the same classification.
  » Example: electrician foreman and electrician apprentice
- Ratios are determined by the trade's U. S. Department of Labor-approved agreement.
- In the event of the absence of ratio language in the applicable agreement, the Minnesota Department of Labor ratio of one apprentice for the first journeyworker and one apprentice for each three journeyworkers thereafter will be applied, (i.e., 1:1, 2:4, 3:7, 4:10, etc.).

- The **legal apprentices are those who first came to work on the job site;** in the event that all apprentices begin work on the project site at the same time, hours worked out-of-ratio for which restitution is due will be divided among the apprentices.
- Time cards will be required to substantiate the start times.
- Employees working in excess of the allowable ratio--or for which U. S. Department of Labor-apprentice agreement/certificate is not provided–must be paid the full journeyworker compensation.

Examples:

Four apprentices and one journeyworker are on site. [4:1]
Ratio calls for four apprentices and ten journeyworkers. [4:10]
The first apprentice on site is considered in ratio as one journeyworker may only accompany one apprentice [1:1]; this particular job has four apprentices.
Correction: the second through the fourth apprentices coming on site are paid the full journeyworker compensation.

Six apprentices and two journeyworkers are on site [6:2]
Ratio calls for six apprentices and sixteen journeyworkers [6:16]
The first apprentice on site is considered in ratio as two journeyworkers may only accompany one apprentice; this particular job has six apprentices–the second journeyworker is a mute point.
Correction: the second through sixth apprentices coming on site are paid the full journeyworker compensation.

(7) **Poster Boards**

The prime contractor must construct and display a poster board, which contains all required posters, is legible and is accessible to all workers from the first day of work until the project is 100% complete. Posters must be protected from the weather. Prime contractors are not allowed to place a poster board at an off-site facility location.

(8) **Trucking Issues**

a) For the purpose of sections seven and eight, the term "owner" includes all persons having an ownership interest in the trucking entity or a partnership interest in the trucking entity and has a legal and rightful title to the vehicle(s) or has an approved lease on the vehicle(s). "Operate" means the owner either physically drives the vehicle or hires another to physically drive the vehicle; yet, maintains the right to direct the day-to-day operations of the vehicle.

b) Trucking Operations Definitions: See MN Rule 5200.1106 web site: https://www.revisor.mn.gov/rules/?id=5200.1106

Independent Trucking Operator: an individual or partnership who owns or holds a vehicle under lease and who contracts that vehicle and the owner's services to an entity which provides construction services to a public works project. The individual owns or leases and drives the equipment, is responsible for the maintenance of the equipment, bears all operating costs, determines the details and means of performing the services, and enters into a legally binding agreement that specifies the relationship to be that of an independent contractor and not that of an employee.

Multiple Truck Operations: any legal business entity that owns more than one vehicle and hires the vehicles out for services to brokers or contractors on public works projects. The owners of a trucking firm may either drive the vehicles or hire employees to drive the vehicles. Employee drivers are subject to the appropriate prevailing wage rate. The owner driving a vehicle is obligated to account for the value of his/her services as a driver at the appropriate prevailing wage.

Partnerships: a legal business entity where two or more individuals hold vehicles under lease and contract those vehicles and their services to an entity which provides construction services to a public works project. The partners own or lease the equipment, are responsible for maintenance and all operating costs, drive the equipment, determine the details and means of performing the services, and enter a legally binding agreement that specifies the

relationship to be that of a partner and not that of an employee. All partners are subject to the appropriate prevailing wage per city of Duluth ordinance 8940 as amended.

Corporation: any legal business entity that owns or leases vehicles to provide construction services to public works projects. All individuals are employees of the corporation and subject to the appropriate prevailing wage regardless of title or position.

Broker: an individual or firm who (activities include, but are not limited to):

- contracts to **provide** trucking services [equipment and driver] in the construction industry to users of such services, such as prime contractors and various subcontractors of the prime;
- contracts to **obtain** services from other trucking operations and dispatches them to various assignments;
- receives payment from the users (such as prime contractors and various subcontractors) in consideration for the trucking services provided; and
- makes payment to the providers (trucking operations so contracted with) for their services.

(9) **Specific documentation from trucking operations.**

Independent Trucking Operators

The owner/operator of a truck must submit a copy of his/her commercial driver's license (CDL), cab card, and insurance certificate for each truck the owner/operator drives on each construction project *before commencing work* on that project. These documents must be sent to the prime contractor who will then forward the material to Labor Standards, Engineering Division at the City of Duluth.

Multiple Truck Operators

Weekly certified payrolls and payment of corresponding prevailing wages plus the fringe benefit package will be required for each project where trucks are operating. This covers the owner plus all employees performing work on the project.

Partnerships

Weekly certified payrolls and payment of corresponding prevailing wages plus fringe benefit packages will be required for each project where trucks are operating. This covers all partners of the organization who perform work on the project.

Each partner performing work on a project must submit a copy of his/her commercial driver's license (CDL), cab card, and insurance certificate for the truck being operated with that weekly certified payroll. It is not necessary to repeat such supporting documentation until a different truck is used and/or certificates or licenses have expired.

Employees of the partnership are always reported on a weekly certified payroll and paid the appropriate prevailing wage plus fringe benefit package for the work being performed.

Corporations

All persons employed by the corporation are subject to receive payment of the prevailing wage plus the fringe benefit package for the work performed on a project regardless of title or position. Weekly certified payrolls must be submitted for all work performed on the project.

Brokers

Truck ownership and a **bonafide contract** between the broker and another trucking operation, a prime contractor, or a subcontractor must be identified. Paperwork must be submitted with the month end trucking report to the city of Duluth Labor Standards representative - Engineering. Certified payrolls are not required when the above documentation is provided and approved.

(10) **Month End Trucking Report - ONLY REQUIRED WITH STATE OF MINNESOTA FUNDING**

The Minnesota Department of Transportation Month End Trucking Report Form A and Form B plus Minnesota Department of Transportation Month End Trucking Report Statement of Compliance are *only required on state funded projects*.

A guide for completing the forms including definitions and the reports, themselves, may be downloaded from:

www.dot.state.mn.us/const/labor/forms.html

Payment to the prime contractor may be withheld until documentation is received and approved.

(11) **Truck Rental Rates - ONLY REQUIRED WITH STATE OF MINNESOTA FUNDING**

Truck rental rates are listed in the prevailing wage section of the project specifications.

(12) **Minnesota Rules 5200.1105 and 5200.1106**

These rules are incorporated into this supplementary general conditions part II by reference and are found on these web sites:

www.revisor.mn.gov/rules/?id=5200

(13) **Truck Axles** web site: https://www.revisor.mn.gov/rules/?id=5200.1100

Per Minnesota Rules 5200.1100 Master Job Classifications, a truck "unit" refers to all axles including the steering axle. A tag axle is also counted as one of the axles. Examples: four rear axles plus one steering axle = five axles total one rear axle plus one steering axle = two axles total

(14) **Non-Compliance and Enforcement**

a) The prime contractor shall be liable for any unpaid wages to its workers or those of its lower-tier subcontractors, trucking companies/Multiple Truck Owners (MTO's) and/or Independent Truck Owner/Operator (ITOs) [MnDOT Standard Specifications for Construction, Section 1801].

b) See Section 9, MnDOT Specification 1906 Partial Payments and Section 5, page two of this document.

c) City of Duluth ordinance 8940 as amended.

(15) **IC-134 form - Withholding Affidavit for Contractors**

The IC-134 form will be required from all Multiple Truck Operators, Partnerships, and Corporations performing trucking services on a project before the retainage or all remaining funds can be released. Web site for completing form online: www.mndor.state.mn.us

The form, itself, is found at: and www.taxes.state.mn.us/Forms_and_Instructions/ic134.pdf

(16) **Owners, Supervisors, Foremen listed on certified payrolls.**

All persons working on a City of Duluth project including owners, partners, supervisors, salaried persons, and working foremen who perform laborer and/or mechanic work shall be reported on the weekly certified payroll reports including all data required of any laborer or mechanic. (ordinance 8731, 6/24/85 and 8940 as amended).

(17) **Supporting documentation**.

At his/her discretion, the City of Duluth employee responsible for prevailing wage labor standards may demand proof of payment of the prevailing wage which may include copies of a payroll register, itemized time sheet and matching cancelled check, or any other supporting documents as stipulated. Payment to the prime contractor may be withheld until documentation is received and approved.

(18) **Kickbacks from Public Works employees prohibited**.

No contractor working on a project or other person shall, by force intimidation, or threat of termination of employment, cause any employee working on a project to give up any part of the compensation to which he is entitled under his contract of employment.

Section 9
Minnesota Department of Transportation Specification 1906 Partial Payments
Process For "Withholding Contract Monies" and "Default and Termination of a Contract" 11/5/04

Mn/DOT Specification 1906 Partial Payments describes the Commissioner's authority to withhold funds to protect the Department's interests. In addition, Specification 1808 Default and Termination of a Contract describes the Commissioner's authority to take the prosecution of the work out of the hands of the Contractor.
Additionally, on projects funded in whole or part with federal funds and in accordance with the Required Contract Provisions Federal-Aid Construction Contracts Form – 1273, Section IV, Subpart 6, "Withholding", incorporated into federal aid contracts, the Contracting Officer may, after written notice to the Contractor, take such action as may be necessary to cause the suspension of any further payment, advance or guarantee of funds until such violations have ceased.

However, the Department must give the Contractor, and it's Sureties due notice prior to exercising these authorities. The withholding of contract funds, in accordance with Specification 1906 or the Required Contract Provisions Federal-Aid Construction Contracts Form – 1273, Section IV, Subpart 6, "Withholding", should be implemented as soon as a possible prevailing wage violation is recognized. However, Default and Termination of a Contract, in accordance with Specification 1808, should only be exercised as a "last resort" if the Contractor is not willing to comply.

Definitions

(Mn/DOT Standard Specifications for Construction 2000 Edition, Section 1103)
Commissioner: The Commissioner of the Minnesota Department of Transportation, or the chief executive of the department or agency constituted for administration of Contract work with its jurisdiction.
Contractor: The individual, firm or corporation Contracting for and undertaking prosecution of the prescribed work; the party of the second part to the Contract, acting directly or through a duly authorized representative.
Department: The Department of Transportation or the State of Minnesota, or the political subdivision, governmental body, board, commission, office, department, division, or agency constituted for administration of the Contract work within its jurisdiction.

(Form 1273 - 29 CFR, Part 5.1, Definitions)

Contracting Officer: The individual, a duly appointed successor or authorized representative who is designated and authorized to enter into Contracts on behalf of the Federal Agency and/or the City of Duluth.

Important Considerations

1. Upon completion of the work under a contract, the department should consider issuing the final voucher as soon as possible. Failure to finalize a contract expeditiously could result in subsequent claims that would prevent the department from finalizing the contract. However, before the issuance of the final voucher, the department must be able to ensure that the terms of the contract have been satisfied. Failure on the part of the department to ensure compliance could result in the Mn/DOT state aid division retaining funds from the department in accordance with *Minnesota Rules 8820.3000, subpart 5*.

2. On every contract, the department should withhold the final retainage in accordance with the following guidelines: (1) if the total amount of the contract is $1,000,000 or more, the department should retain funds not more than $50,000, (2) if the total amount of the contract is less than $1,000,000, the department should retain 5% of the total contract, (3) retainage should be withheld until the department can ensure that the contractor has met the terms of the contract or until the finalization of the contract.

3. This guide specifies that the department verbally notify the bonding company early in the process. Generally, as a "rule of thumb", notifying the bonding company is usually the "last resort". However, the justification for the early notification is related to the language found in *Minnesota statute 574.31, subdivision 2,* which summarizes that if an individual or the department does not submit a claim on the payment bond within 120 days after the completion of work under the contract, the claim can be denied.

The following are general guidelines that should be followed prior to placing a Contractor in default:

Step 1: Upon verbal or written notification that a possible prevailing wage violation exists, the Department should give written notice to the Contractor regarding the nature of the claim, along with the Department's intent to withhold monies until the claim is investigated and determined to be in compliance. Additionally, the Department should inform the Contractor that the bonding company has been verbally notified of the claim. Please be aware, the Department should ensure employee confidentiality at all times.

Step 2: Upon a preliminary determination surrounding the financial extent of the claim, the Department should consider retaining a "reasonable" portion of one or more partial estimates in accordance with Mn/DOT's 2000 Standard Specifications for Construction, Section 1906; or on federal aid contracts, in accordance with the Required Contract Provisions Federal-Aid Construction Contracts Form – 1273, Section IV, Subpart 6, "Withholding".

Step 3: If it is determined that the claim is valid, the Department should schedule a meeting with the Contractor and attempt to resolve the matter. If the claim is determined to be invalid, the Department should release any partial estimates that may have been held as a result of the claim. However, the Department should continue to withhold the final retainage in accordance with the above-mentioned: *Important Considerations, 2*.

Step 4: If resolution cannot be obtained through a meeting, the Department should order the Contractor, in writing, to complete their obligations under the contract. The letter should clearly state the circumstances under which the Department has deemed that the Contractor has not met the terms of the contract. Additionally, the Department should include a reasonable deadline for this obligation to be completed. A copy of this letter should be forwarded to the Surety, District State Aid Engineer (DSAE), Labor Compliance Unit and the Department's Attorney.

Step 5: In the event that the Contractor does not respond to the Department's written order, the Department should send a similar letter, requesting that the Contractor respond immediately, in writing, regarding the Contractor's intention to comply or not comply with the order. A copy of this letter should be forwarded to the Surety, District State Aid Engineer (DSAE), Labor Compliance Unit and the Department's Attorney.

Step 6: If the Department still does not get a proper response from the Contractor, the Department should write another letter, addressed to both the Contractor and the Surety, specifying all the facts of the alleged breach, demanding that the Contractor, or its Surety, respond satisfactorily within 10 days or the Department may exercise its authority to Default and Terminate the Contract in accordance within/DOT's 2000 Specifications for Construction, Section

1808. It's important to provide sufficient detail so that the Surety understands the situation. This notification should be sent by certified mail. A copy of this letter should be forwarded to the Surety, District State Aid Engineer (DSAE), Labor Compliance Unit and the Department's Attorney.

Step 7: If the Contractor or Surety is unresponsive after 10 days, the Department should consult with their attorney to consider proceeding with Default and Termination of the Contract.

Step 8: Upon termination of the contract, the Department provides a written order to the Surety, requiring the Surety to bring resolution to the prevailing wage violation.

Step 9: The Department places the Contractor on a Non-Responsible Bidder's List and rejects any future awards.

Section 10

Federal Labor Standards Provisions U.S. Department of Housing and Urban Development Office of Labor Relations

Previous editions are obsolete Page 1 of 5 form **HUD-4010 (06/2009**) ref. Handbook 1344.1

Applicability

The Project or Program to which the construction work covered by this contract pertains is being assisted by the United States of America and the following Federal Labor Standards Provisions are included in this Contract pursuant to the provisions applicable to such Federal assistance.

A. 1. (i) Minimum Wages. All laborers and mechanics employed or working upon the site of the work, will be paid unconditionally and not less often than once a week, and without subsequent deduction or rebate on any account (except such payroll deductions as are permitted by regulations issued by the Secretary of Labor under the Copeland Act (29 CFR Part 3), the full amount of wages and bona fide fringe benefits (or cash equivalents thereof) due at time of payment computed at rates not less than those contained in the wage determination of the Secretary of Labor which is attached hereto and made a part hereof, regardless of any contractual relationship which may be alleged to exist between the contractor and such laborers and mechanics.

Contributions made or costs reasonably anticipated for bona fide fringe benefits under Section l(b)(2) of the Davis-Bacon Act on behalf of laborers or mechanics are considered wages paid to such laborers or mechanics, subject to the provisions of 29 CFR 5.5(a)(1)(iv); also, regular contributions made or costs incurred for more than a weekly period (but not less often than quarterly) under plans, funds, or programs, which cover the particular weekly period, are deemed to be constructively made or incurred during such weekly period.

Such laborers and mechanics shall be paid the appropriate wage rate and fringe benefits on the wage determination for the classification of work actually performed, without regard to skill, except as provided in 29 CFR 5.5(a)(4). Laborers or mechanics performing work in more than one classification may be compensated at the rate specified for each classification for the time actually worked therein: Provided, That the employer's payroll records accurately set forth the time spent in each classification in which work is performed. The wage determination (including any additional classification and wage rates conformed under 29 CFR 5.5(a)(1)(ii) and the Davis-Bacon poster (WH-1321) shall be posted at all times by the contractor and its subcontractors at the site of the work in a prominent and accessible, place where it can be easily seen by the workers.

(ii) (a) Any class of laborers or mechanics which is not listed in the wage determination and which is to be employed under the contract shall be classified in conformance with the wage determination. HUD shall approve an additional classification and wage rate and fringe benefits therefore only when the following criteria have been met:

(1) The work to be performed by the classification requested is not performed by a classification in the wage determination; and

(2) The classification is utilized in the area by the construction industry; and

(3) The proposed wage rate, including any bona fide fringe benefits, bears a reasonable relationship to the wage rates contained in the wage determination.

(b) If the contractor and the laborers and mechanics to be employed in the classification (if known), or their representatives, and HUD or its designee agree on the classification and wage rate (including the amount designated for fringe benefits where appropriate), a report of the action taken shall be sent by HUD or its designee to the Administrator of the Wage and Hour Division, Employment Standards Administration, U.S. Department of Labor, Washington, D.C. 20210. The Administrator, or an authorized representative, will approve, modify, or disapprove every additional classification action within 30 days of receipt and so advise HUD or its designee or will notify HUD or its designee within the 30-day period that additional time is necessary. (Approved by the Office of Management and Budget under OMB control number 1215-0140.)

(c) In the event the contractor, the laborers or mechanics to be employed in the classification or their representatives, and HUD or its designee do not agree on the proposed classification and wage rate (including the amount designated for fringe benefits, where appropriate), HUD or its designee shall refer the questions, including the views of all interested parties and the recommendation of HUD or its designee, to the Administrator for determination. The Administrator, or an authorized representative, will issue a determination within 30 days of receipt and so advise HUD or its designee or will notify HUD or its designee within the 30-day period that additional time is necessary. (Approved by the Office of Management and Budget under OMB Control Number 1215-0140.)

(d) The wage rate (including fringe benefits where appropriate) determined pursuant to subparagraphs (1)(ii)(b) or (c) of this paragraph, shall be paid to all workers performing work in the classification under this contract from the first day on which work is performed in the classification.

(iii) Whenever the minimum wage rate prescribed in the contract for a class of laborers or mechanics includes a fringe benefit which is not expressed as an hourly rate, the contractor shall either pay the benefit as stated in the wage determination or shall pay another bona fide fringe benefit or an hourly cash equivalent thereof.

(iv) If the contractor does not make payments to a trustee or other third person, the contractor may consider as part Previous editions are obsolete Page 2 of 5 form **HUD-4010** (06/2009) ref. Handbook 1344.1 of the wages of any laborer or mechanic the amount of any costs reasonably anticipated in providing bona fide fringe benefits under a plan or program, Provided, That the Secretary of Labor has found, upon the written request of the contractor, that the applicable standards of the Davis-Bacon Act have been met. The Secretary of Labor may require the contractor to set aside in a separate account assets for the meeting of obligations under the plan or program. (Approved by the Office of Management and Budget under OMB Control Number 1215-0140.)

2. Withholding. HUD or its designee shall upon its own action or upon written request of an authorized representative of the Department of Labor withhold or cause to be withheld from the contractor under this contract or any other Federal contract with the same prime contractor, or any other Federally-assisted contract subject to Davis-Bacon prevailing wage requirements, which is held by the same prime contractor so much of the accrued payments or advances as may be considered necessary to pay laborers and mechanics, including apprentices, trainees and helpers, employed by the contractor or any subcontractor the full amount of wages required by the contract In the event of failure to pay any laborer or mechanic, including any apprentice, trainee or helper, employed or working on the site of the work, all or part of the wages required by the contract, HUD or its designee may, after written notice to the contractor, sponsor, applicant, or owner, take such action as may be necessary to cause the suspension of any further payment, advance, or guarantee of funds until such violations have ceased. HUD or its designee may, after written notice to the contractor, disburse such amounts withheld for and on account of the contractor or subcontractor to the respective employees to whom they are due. The Comptroller General shall make such disbursements in the case of direct Davis-Bacon Act contracts.

3. (i) Payrolls and basic records. Payrolls and basic records relating thereto shall be maintained by the contractor during the course of the work preserved for a period of three years thereafter for all laborers and mechanics working at the site of the work. Such records shall contain the name, address, and social security number of each such worker, his or her correct classification, hourly rates of wages paid (including rates of contributions or costs anticipated for bona fide fringe benefits or cash equivalents thereof of the types described in Section l(b)(2)(B) of the Davis-bacon Act), daily and weekly number of hours worked, deductions made and actual wages paid. Whenever the Secretary of Labor has found under 29 CFR 5.5 (a)(1)(iv) that the wages of any laborer or mechanic include the amount of any costs reasonably anticipated in providing benefits under a plan or program described in Section l(b)(2)(B) of the Davis-Bacon Act, the contractor shall maintain records which show that the commitment to provide such benefits is enforceable, that the plan or program is financially responsible, and that the plan or program has been communicated in writing to the laborers or mechanics affected, and records which show the costs anticipated or the actual cost incurred in providing such benefits. Contractors employing apprentices or trainees under approved programs shall maintain written evidence of the registration of apprenticeship programs and certification of trainee programs, the registration of the apprentices and trainees, and the ratios and wage rates prescribed in the applicable programs. (Approved by the Office of Management and Budget under OMB Control Numbers 1215-0140 and 1215-0017.)

(ii) (a) The contractor shall submit weekly for each week in which any contract work is performed a copy of all payrolls to HUD or its designee if the agency is a party to the contract, but if the agency is not such a party, the contractor will submit the payrolls to the applicant sponsor, or owner, as the case may be, for transmission to HUD or its designee. The payrolls submitted shall set out accurately and completely all of the information required to be maintained under 29 CFR 5.5(a)(3)(i) except that full social security numbers and home addresses shall not be included on weekly transmittals. Instead the payrolls shall only need to include an individually identifying number for each employee (e.g., the last four digits of the employee's social security number). The required weekly payroll information may be submitted in any form desired. Optional Form WH-347 is available for this purpose from the Wage and Hour Division Web site at *http://www.dol.gov./whd/wh347.pdf* or its successor site. The prime contractor is responsible for the submission of copies of payrolls by all subcontractors. Contractors and subcontractors shall maintain the full social security number and current address of each covered worker, and shall provide them upon request to HUD or its designee if the agency is a party to the contract, but if the agency is not such a party, the contractor will submit the payrolls to the applicant sponsor, or owner, as the case may be, for transmission to HUD or its designee, the contractor, or the Wage and Hour Division of the Department of Labor for purposes of an investigation or audit of compliance with prevailing wage requirements. It is not a violation of this subparagraph for a prime contractor to require a subcontractor to provide addresses and social security numbers to the prime contractor for its own records, without weekly submission to HUD or its designee. (Approved by the Office of Management and Budget under OMB Control Number 1215-0149.)

(b) Each payroll submitted shall be accompanied by a "Statement of Compliance," signed by the contractor or subcontractor or his or her agent who pays or supervises the payment of the persons employed under the contract and shall certify the following:

(1) That the payroll for the payroll period contains the information required to be provided under 29 CFR 5.5 (a)(3)(ii), the appropriate information is being maintained under 29 CFR 5.5(a)(3)(i), and that such information is correct and complete;

Previous editions are obsolete; Page 3 of 5 form **HUD-4010** (06/2009) ref. Handbook 1344.1

(2) That each laborer or mechanic (including each helper, apprentice, and trainee) employed on the contract during the payroll period has been paid the full weekly wages earned, without rebate, either directly or indirectly, and that no deductions have been made either directly or indirectly from the full wages earned, other than permissible deductions as set forth in 29 CFR Part 3;

(3) That each laborer or mechanic has been paid not less than the applicable wage rates and fringe benefits or cash equivalents for the classification of work performed, as specified in the applicable wage determination incorporated into the contract.

(c) The weekly submission of a properly executed certification set forth on the reverse side of Optional Form WH-347 shall satisfy the requirement for submission of the "Statement of Compliance" required by subparagraph A.3.(ii)(b).

(d) The falsification of any of the above certifications may subject the contractor or subcontractor to civil or criminal prosecution under Section 1001 of Title 18 and Section 231 of Title 31 of the United States Code.

(iii) The contractor or subcontractor shall make the records required under subparagraph A.3.(i) available for inspection, copying, or transcription by authorized representatives of HUD or its designee or the Department of Labor, and shall permit such representatives to interview employees during working hours on the job. If the contractor or subcontractor fails to submit the required records or to make them available, HUD or its designee may, after written notice to the contractor, sponsor, applicant or owner, take such action as may be necessary to cause the suspension of any further payment, advance, or guarantee of funds. Furthermore, failure to submit the required records upon request or to make such records available may be grounds for debarment action pursuant to 29 CFR 5.12.

4. Apprentices and Trainees.

(i) Apprentices. Apprentices will be permitted to work at less than the predetermined rate for the work they performed when they are employed pursuant to and individually registered in a bona fide apprenticeship program registered with the U.S. Department of Labor, Employment and Training Administration, Office of Apprenticeship Training, Employer and Labor Services, or with a State Apprenticeship Agency recognized by the Office, or if a person is employed in his or her first 90 days of probationary employment as an apprentice in such an apprenticeship program, who is not individually registered in the program, but who has been certified by the Office of Apprenticeship Training, Employer and Labor Services or a State Apprenticeship Agency (where appropriate) to be eligible for probationary employment as an apprentice. The allowable ratio of apprentices to journeymen on the job site in any craft classification shall not be greater than the ratio permitted to the contractor as to the entire work force under the registered program. Any worker listed on a payroll at an apprentice wage rate, who is not registered or otherwise employed as stated above, shall be paid not less than the applicable wage rate on the wage determination for the classification of work actually performed. In addition, any apprentice performing work on the job site in excess of the ratio permitted under the registered program shall be paid not less than the applicable wage rate on the wage determination for the work actually performed. Where a contractor is performing construction on a project in a locality other than that in which its program is registered, the ratios and wage rates (expressed in percentages of the journeyman's hourly rate) specified in the contractor's or subcontractor's registered program shall be observed. Every apprentice must be paid at not less than the rate specified in the registered program for the apprentice's level of progress, expressed as a percentage of the journeymen hourly rate specified in the applicable wage determination. Apprentices shall be paid fringe benefits in accordance with the provisions of the apprenticeship program. If the apprenticeship program does not specify fringe benefits, apprentices must be paid the full amount of fringe benefits listed on the wage determination for the applicable classification. If the Administrator determines that a different practice prevails for the applicable apprentice classification, fringes shall be paid in accordance with that determination. In the event the Office of Apprenticeship Training, Employer and Labor Services, or a State Apprenticeship Agency recognized by the Office, withdraws approval of an apprenticeship program, the contractor will no longer be permitted to utilize apprentices at less than the applicable predetermined rate for the work performed until an acceptable program is approved.

(ii) Trainees. Except as provided in 29 CFR 5.16, trainees will not be permitted to work at less than the predetermined rate for the work performed unless they are employed pursuant ',to and individually registered in a program which has received prior approval, evidenced by formal certification by the U.S. Department of Labor, Employment and Training Administration. The ratio of trainees to journeymen on the job site shall not be greater than permitted under the plan approved by the Employment and Training Administration. Every trainee must be paid at not less than the rate specified in the approved program for the trainee's level of progress, expressed as a percentage of the journeyman hourly rate specified in the applicable wage determination. Trainees shall be paid fringe benefits in accordance with the provisions of the trainee program. If the trainee program does not mention fringe benefits, trainees shall be paid the full amount of fringe benefits listed on the wage determination unless the Administrator of the Wage and Hour Division determines that there is an apprenticeship program associated with the corresponding

journeyman wage rate on the wage determination which provides for less than full fringe benefits for apprentices. Any employee listed on the payroll at a trainee rate who is not registered and participating in a training plan approved by
Previous editions are obsolete; Page 4 of 5 form **HUD-4010** (06/2009) ref. Handbook 1344.1
the Employment and Training Administration shall be paid not less than the applicable wage rate on the wage determination for the work actually performed. In addition, any trainee performing work on the job site in excess of the ratio permitted under the registered program shall be paid not less than the applicable wage rate on the wage determination for the work actually performed. In the event the Employment and Training Administration withdraws approval of a training program, the contractor will no longer be permitted to utilize trainees at less than the applicable predetermined rate for the work performed until an acceptable program is approved.

(iii) Equal employment opportunity. The utilization of apprentices, trainees and journeymen under 29 CFR Part 5 shall be in conformity with the equal employment opportunity requirements of Executive Order 11246, as amended, and 29 CFR Part 30.

5. Compliance with Copeland Act requirements. The contractor shall comply with the requirements of 29 CFR Part 3 which are incorporated by reference in this contract

6. Subcontracts. The contractor or subcontractor will insert in any subcontracts the clauses contained in subparagraphs 1 through 11 in this paragraph A and such other clauses as HUD or its designee may by appropriate instructions require, and a copy of the applicable prevailing wage decision, and also a clause requiring the subcontractors to include these clauses in any lower tier subcontracts. The prime contractor shall be responsible for the compliance by any subcontractor or lower tier subcontractor with all the contract clauses in this paragraph.

7. Contract termination; debarment. A breach of the contract clauses in 29 CFR 5.5 may be grounds for termination of the contract and for debarment as a contractor and a subcontractor as provided in 29 CFR 5.12.

8. Compliance with Davis-Bacon and Related Act Requirements. All rulings and interpretations of the Davis-Bacon and Related Acts contained in 29 CFR Parts 1, 3, and 5 are herein incorporated by reference in this contract

9. Disputes concerning labor standards. Disputes arising out of the labor standards provisions of this contract shall not be subject to the general disputes clause of this contract. Such disputes shall be resolved in accordance with the procedures of the Department of Labor set forth in 29 CFR Parts 5, 6, and 7. Disputes within the meaning of this clause include disputes between the contractor (or any of its subcontractors) and HUD or its designee, the U.S. Department of Labor, or the employees or their representatives.

10. (i) Certification of Eligibility. By entering into this contract the contractor certifies that neither it (nor he or she) nor any person or firm who has an interest in the contractor's firm is a person or firm ineligible to be awarded Government contracts by virtue of Section 3(a) of the Davis-Bacon Act or 29 CFR 5.12(a)(1) or to be awarded HUD contracts or participate in HUD programs pursuant to 24 CFR Part 24.
(ii) No part of this contract shall be subcontracted to any person or firm ineligible for award of a Government contract by virtue of Section 3(a) of the Davis-Bacon Act or 29 CFR 5.12(a)(1) or to be awarded HUD contracts or participate in HUD programs pursuant to 24 CFR Part 24.
(iii) The penalty for making false statements is prescribed in the U.S. Criminal Code, 18 U.S.C. 1001. Additionally, U.S. Criminal Code, Section 1 01 0, Title 18, U.S.C., "Federal Housing Administration transactions", provides in part: "Whoever, for the purpose of . . . influencing in any way the action of such Administration..... makes, utters or publishes any statement knowing the same to be false..... shall be fined not more than $5,000 or imprisoned not more than two years, or both."

11. Complaints, Proceedings, or Testimony by Employees. No laborer or mechanic to whom the wage, salary, or other labor standards provisions of this Contract are applicable shall be discharged or in any other manner discriminated against by the Contractor or any subcontractor because such employee has filed any complaint or instituted or caused to be instituted any proceeding or has testified or is about to testify in any proceeding under or relating to the labor standards applicable under this Contract to his employer.

B. <u>Contract Work Hours and Safety Standards Act.</u> The provisions of this paragraph B are applicable where the amount of the prime contract exceeds $100,000. As used in this paragraph, the terms "laborers" and "mechanics" include watchmen and guards.

(1) Overtime requirements. No contractor or subcontractor contracting for any part of the contract work which may require or involve the employment of laborers or mechanics shall require or permit any such laborer or mechanic in any workweek in which the individual is employed on such work to work in excess of 40 hours in such workweek unless such laborer or mechanic receives compensation at a rate not less than one and one-half times the basic rate of pay for all hours worked in excess of 40 hours in such workweek.

(2) Violation; liability for unpaid wages; liquidated damages. In the event of any violation of the clause set forth in subparagraph (1) of this paragraph, the contractor and any subcontractor responsible therefore shall be liable for the unpaid wages. In addition, such contractor and subcontractor shall be liable to the United States (in the case of work done under contract for the District of Columbia or a territory, to such District or to such territory), for liquidated damages. Such liquidated damages shall be computed with respect to each individual laborer or mechanic, including watchmen and guards, employed in violation of the clause set forth in subparagraph (1) of this paragraph, in the sum of $10 for each calendar day on which such individual was required or permitted to work in excess of the standard workweek of 40 hours without payment of the overtime wages required by the clause set forth in sub paragraph (1) of this paragraph.
Previous editions are obsolete Page 5 of 5 form **HUD-4010** (06/2009) ref. Handbook 1344.1

(3) Withholding for unpaid wages and liquidated damages. HUD or its designee shall upon its own action or upon written request of an authorized representative of the Department of Labor withhold or cause to be withheld, from any moneys payable on account of work performed by the contractor or subcontractor under any such contract or any other Federal contract with the same prime contract, or any other Federally-assisted contract subject to the Contract Work Hours and Safety Standards Act which is held by the same prime contractor such sums as may be determined to be necessary to satisfy any liabilities of such contractor or subcontractor for unpaid wages and liquidated damages as provided in the clause set forth in subparagraph (2) of this paragraph.

(4) Subcontracts. The contractor or subcontractor shall insert in any subcontracts the clauses set forth in subparagraph (1) through (4) of this paragraph and also a clause requiring the subcontractors to include these clauses in any lower tier subcontracts. The prime contractor shall be responsible for compliance by any subcontractor or lower tier subcontractor with the clauses set forth in subparagraphs (1) through (4) of this paragraph.

C. <u>Health and Safety.</u> The provisions of this paragraph C are applicable where the amount of the prime contract exceeds $100,000.

(1) No laborer or mechanic shall be required to work in surroundings or under working conditions which are unsanitary, hazardous, or dangerous to his health and safety as determined under construction safety and health standards promulgated by the Secretary of Labor by regulation.

(2) The Contractor shall comply with all regulations issued by the Secretary of Labor pursuant to Title 29 Part 1926 and failure to comply may result in imposition of sanctions pursuant to the Contract Work Hours and Safety Standards Act, (Public Law 91-54, 83 Stat 96). 40 USC 3701 et seq.

(3) The contractor shall include the provisions of this paragraph in every subcontract so that such provisions will be binding on each subcontractor. The contractor shall take such action with respect to any subcontractor as the Secretary of Housing and Urban Development or the Secretary of Labor shall direct as a means of enforcing such provisions.

Section 11

Equal Opportunity Laws and Regulations

(A) In addition to Contract specifications set forth below, the Contractor shall conduct and administer this Contract in compliance with:

(1) Title VI of the Civil Rights Act of 1964 (Pub. L. 88-352) and implementing regulations issued at 24 CFR Part 1;
(2) Title VIII of the Civil Rights Act of 1968 (Pub. L. 90-284), as amended, and implementing regulations;
(3) Section 109 of the Housing and Community Development Act of 1974, as amended; and the regulations issued pursuant thereto (24 CFR Section 570.601);
(4) Section 3 of the Housing and Urban Development Act of 1968, as amended, and implementing regulations of 24 CFR Part 135;
(5) Executive Order 11246, as amended by Executive Order 11375 and 12086 and implementing regulations at 41 CFR Chapter 60;
(6) Executive Order 11063, as amended by Executive Order 12259 and implementing regulations at 24 CFR Part 107;
(7) Section 504 of the Rehabilitation Act of 1973 (Pub. L. 93-112), as amended, and implementing regulations when published for effect;
(8) The Age Discrimination Act of 1975, as amended, (Pub. L. 94-135) and implementing regulations when published for effect;
(9) The Minnesota Human Rights Act of 1974, as amended (Chapter 363).

Equal Opportunity and Affirmative Action

(A) Contractors and Subcontractors that have a work force in excess of fifty (50) employees and a contract in excess of $50,000.00 shall prepare and maintain an appropriate affirmative action plan in accordance with the provisions of 41 CFR 60 "Compliance Responsibility for Equal Opportunity".

(B) Non-segregated Facilities. The Contractor shall certify that he does not maintain or provide for his employees any segregated facilities at any of his establishments, and that he does not permit his employees to perform their services at any location, under his control, where segregated facilities are maintained. The Contractor covenants that he will not maintain or provide for his employees any segregated facilities at any of his establishments, and he will not permit his employees to perform their services at any location, under his control, where segregated facilities are maintained. As used in this paragraph the term "segregated facilities" means any waiting rooms, work areas, rest rooms and wash rooms, restaurants and other eating areas, time clocks, locker rooms and other storage or dressing areas, parking lots, drinking fountains, recreation or facilities provided for employees which are segregated by explicit directive or are in fact segregated on the basis of race, color, creed, religion, national origin, ancestry, age, marital status, status with respect to public assistance, and/or disability because of habit, local custom, or otherwise.

General Provisions Against Discrimination

(A) In all hiring or employment made possible by or resulting from this Contract, there:

(1) will not be any discrimination against any employee or applicant for employment because of race, color, creed, religion, national origin, ancestry, age, sex, marital status, status with respect to public assistance, and/or disability.

(2) affirmative action will be taken to ensure that applicants are employed, and that employees are treated during employment without regard to their race, color, creed, religion, national origin, ancestry, age, sex, marital status, status with respect to public assistance, and/or disability. This requirement shall apply to, but not be limited to, the following: employment, upgrading, demotion or transfer; recruitment or recruitment advertising; lay-off or termination; rates of pay or other forms of compensation; and selection for training, including apprenticeship. There shall be posted in conspicuous places available to employees and applicants for employment, notices setting forth the provisions of this clause. All solicitations or advertisements for employees shall state that all qualified applicants will receive consideration for employment without regard to race, color, creed, religion, national origin, ancestry, age, sex, marital status, status with respect to public assistance, and/or disability.

(B) No person in the United States shall, on the grounds of race, color, creed, religion, national origin, age, sex, marital status, status with respect to public assistance, and/or disability, be excluded from participation in, be denied the benefits of, or be subject to discrimination under any program or activity made possible by or resulting from this Contract. The Contractor and each employer will comply with all requirements imposed by or pursuant to the regulations of the Federal Agency effectuating Title VI of the Civil Rights Act of 1966. The Contractor will note this requirement in all solicitations or advertisements for employees. The Contractor agrees to post in conspicuous places, available to employees and applicants for employment, notices to be provided setting forth the provisions of this nondiscrimination clause.

(C) The Contractor will send to each labor union or representative of workers with which he has a collective bargaining agreement or other contract or understanding, a notice advising the labor union or workers' representative of the Contractor's commitments under these provisions, and shall post copies of the notice in conspicuous places available to employees and applicants for employment.

(D) The Contractor hereby agrees that he will incorporate into any contract for construction work, or modification thereof, as defined in the regulations of the Secretary of Labor at 41 CFR Chapter 60, which is paid for in whole or in part with funds obtained pursuant to this Contract, the equal opportunity clause which is a part of these Contract Documents.

(E) The Contractor further agrees that he will be bound by the equal opportunity clause and other provisions of 41 CFR Chapter 60, with respect to his own employment practices when he participates in federally assisted construction work: **Provided:** That of the Contractor so participating is a State or Local Government, the above equal opportunity clause is not applicable to any agency, instrumentality, or subdivision of such government which does not participate in work on or under the Contract. Also, the Contractor will make his files available to inspection by appropriate government agencies and shall furnish those reports as may be required by said agencies.

(F) The Contractor agrees that he will assist and cooperate actively with the Federal Agency and the Secretary of Labor in obtaining the compliance of subcontractors with the equal opportunity clause and the rules, regulations, and relevant orders of the Secretary of Labor, that he will furnish the Federal Agency and the Secretary of Labor such information as they may require for the supervision of such compliance, and that he will otherwise assist the Federal Agency in the discharge of its primary responsibility for securing compliance.

(G) The Contractor further agrees that he will refrain from entering into any contract or any contract modification subject to Executive Order 11246 of September 24, 1965, with a subcontractor debarred from, or who has not demonstrated eligibility for, Government contracts and federally assisted construction contracts pursuant to the Executive Order. In addition, the Contractor agrees that if he fails or refuses to comply with these undertakings, the City or the Federal Agency may take any or all of the following actions: Terminate or suspend in whole or in part this Contract; refrain from extending any further assistance to the Contractor under the Project with respect to which the failure or refusal occurred until satisfactory assurance of future compliance has been received from such Contractor and refer the case to the Department of Justice for appropriate legal proceedings.

Affirmative Action - "Construction Contracts" over $10,000

Notice of Requirement for Affirmative Action to Ensure Equal Employment Opportunity
(Executive Order 11246)

1. The Offeror's or Bidder's attention is called to the "Equal Opportunity Clause" and the "Standard Federal Equal Employment Opportunity Construction Contract Specifications" set forth herein.

2. The goals and timetables for minority and female participation, expressed in percentage terms for the Contractor's aggregate workforce in each trade on all construction work in the covered area, are as follows:

Timetables	Goals for minority participation (percent)	Goals for female participation (percent)
From April 1, 1980 until revised	3.0	6.9

These goals are applicable to all the Contractor's construction work (whether or not it is Federal or federally assisted) performed in the covered area.

The Contractor's compliance with the Executive Order and the regulations in 41 CFR Part 60-4 shall be based on its implementation of the Equal Opportunity Clause, specific affirmative action obligations required by the specifications set forth in 41 CFR 60-4.3 (a), and its efforts to meet the goals established for the geographical area where the contract resulting from this solicitation is to be performed. The hours of minority and female employment and training must be substantially uniform throughout the length of the contract, and in each trade, and the contractor shall make a good faith effort to employ minorities and women evenly on each of its projects. The transfer of minority or female employees or trainees from Contractor to Contractor or from project to project for the sole purpose of meeting the Contractor's goals shall be a violation of the contract, the Executive Order and the regulations in 41 CFR Part 60-4. Compliance with the goals will be measured against the total work hours performed.

3. The Contractor shall provide written notification to the City and to the Director of the Office of Federal Contract Compliance Programs; U.S. Department of Labor, ESA/OFCCP, 16th Floor, 230 South Dearborn Street, Chicago, Illinois, 60604, within 10 working days of award of any construction subcontract and/or subcontract in excess of $10,000 at any tier for construction work under the contract resulting from this solicitation. The notification shall list the name, address and telephone number of the contractor and/or subcontractor; employer identification number; estimated dollar amount of the prime contract; estimated dollar amount of the subcontract; estimated starting and completion dates of the subcontract; and the geographical area in which the contract is to be performed.

4. As used in this Notice, and in the Contract, the "covered area" is all work under a contract currently held with the City of Duluth, Minnesota.

Standard Federal Equal Employment Opportunity
Construction Contract Specifications (Executive Order 11246)

1. As used in these specifications:
   a) "Director" means Director, Office of Federal Contract Compliance Programs, United States Department of Labor; or any person to whom the Director delegates authority;
   b) "Employer identification number" means the Federal Social Security number used on the Employer's Quarterly Federal Tax Return, U.S. Treasury Department Form 941.
   c) "Minority" includes:
      (i) Black (all persons having origins in any of the Black African racial groups not of Hispanic origin);
      (ii) Hispanic (all persons of Mexican, Puerto Rican, Cuban, Central or South American or other Spanish Culture or origin, regardless of race);
      (iii) Asian and Pacific Islander (all persons having origins in any of the original peoples of the Far East, Southeast Asia, the Indian Subcontinent, or the Pacific Islands); and
      (iv) American Indian or Alaskan Native (all persons having origins in any of the original peoples of North America and maintaining identifiable tribal affiliations through membership and participation or community identification).

2. Whenever the Contractor, or any Subcontractor at any tier, subcontracts a portion of the work involving any construction trade, it shall physically include in each subcontract in excess of $10,000 the provisions of these specifications and the Notice which contains the applicable goals for minority and female participation and which is set forth in the solicitations from which this contract resulted.

3. If the Contractor is participating (pursuant to 41 CFR 60-4.5) in a Hometown Plan approved by the U.S. Department of Labor in the covered area either individually or through an association, its affirmative action obligations on all work in the Plan area (including goals and timetables) shall be in accordance with that Plan for those trades which have unions participating in the Plan. Contractors must be able to demonstrate their participation in and compliance with the provisions of any such Hometown Plan. Each Contractor or Subcontractor participating in an approved Plan is individually required to comply with its obligations under the EEO clause, and to make a good faith effort to achieve each goal under the Plan in each trade in which it has employees. The overall good faith performance by other Contractors or Subcontractors toward a goal in approved Plan does not excuse any covered Contractor's or Subcontractor's failure to take good faith efforts to achieve the Plan goals and timetables.

4. The Contractor shall implement the specific affirmative action standards provided in paragraphs 7a through p of these specifications. The goals set forth in the solicitation from which this contract resulted are expressed as percentages of the total hours of employment and training of minority and female utilization the Contractor should reasonably be able to achieve in each construction trade in which it has employees in the covered area. The Contractor is expected to make substantially uniform progress toward its goals in each craft during the period specified.

5. Neither the provisions of any collective bargaining agreement, nor the failure by a union with whom the Contractor has a collective bargaining agreement, to refer either minorities or women shall excuse the Contractor's obligations under these specifications, Executive Order 11246, or the regulations promulgated pursuant thereto.

6. In order for the non-working training hours of apprentices and trainees to be counted in meeting the goals, such apprentices and trainees must be employed by the Contractor during the training period, and the Contractor must have made a commitment to employ the apprentices and trainees at the completion of their training, subject to the availability of employment opportunities. Trainees must be trained pursuant to training programs approved by the U.S. Department of Labor.

7. The Contractor shall take specific affirmative action to ensure equal employment opportunity. The evaluation of the Contractor's compliance with these specifications shall be based upon its effort to achieve maximum results from its actions. The Contractor shall document these efforts fully, and shall implement affirmative action steps at least as extensive as the following:

a. Ensure and maintain a working environment free of harassment, intimidation, and coercion at all sites, and in all facilities at which the Contractor's employees are assigned to work. The Contractor, where possible, will assign two or more women to each construction project. The Contractor shall specifically ensure that all foremen, superintendents, and other on-site supervisory personnel are aware of and carry out the Contractor's obligation to maintain such a working environment, with specific attention to minority or female individuals working at such sites or in such facilities.

b. Establish and maintain a current list of minority and female recruitment sources, provide written notification to minority and female recruitment sources and to community organizations when the Contractor or its unions have employment opportunities available, and maintain a record of the organizations' responses.

c. Maintain a current file of the names, addresses and telephone numbers of each minority and female off-the-street applicant and minority or female referral from a union, a recruitment source or community organization and of what action was taken with respect to each such individual. If such individual was sent to the union hiring hall for referral and was not referred back to the Contractor by the union or, if referred, not employed by the Contractor, this shall be documented in the file with the reason therefore, along with whatever additional actions the Contractor may have taken.

d. Provide immediate written notification to the Director when the union or unions with which the Contractor has a collective bargaining agreement has not referred to the Contractor a minority person or woman sent by the Contractor, or when the Contractor has other information that the union referral process has impeded the Contractor's efforts to meet its obligations.

e. Develop on-the-job training opportunities and/or participate in training programs for the area which expressly include minorities and women, including upgrading programs and apprenticeship and trainee programs relevant to the Contractor's employment needs, especially those programs funded or approved by the Department of Labor. The Contractor shall provide notices of these programs to the sources compiled under 7b above.

f. Disseminate the Contractor's EEO policy by providing notice of the policy to unions and training programs and requesting their cooperation in assisting the Contractor in meeting its EEO obligations; by including it in any policy manual and collective bargaining agreement; by publicizing it in the company newspaper, annual report, etc.; by specific review of the policy with all management personnel and with all minority and female employees at least once a year; and by posting the company EEO policy on bulletin boards accessible to all employees at each location where construction work is performed.

g. Review, at least annually, the company's EEO policy and affirmative action obligations under these specifications with all employees having any responsibility for hiring, assignment, layoff, termination or other employment decisions including specific review of these items with onsite supervisory personnel such as Superintendents, General Foremen, etc., prior to the initiation of construction work at any job site. A written record shall be made and maintained identifying the time and place of these meetings, persons attending, subject matter discussed, and disposition of the subject matter.

h. Disseminate the Contractor's EEO policy externally by including it any advertising in the news media, specifically including minority and female news media, and providing written notification to and discussing the Contractor's EEO policy with other Contractors and Subcontractors with whom the Contractor does or anticipates doing business.

i. Direct its recruitment efforts, both oral and written, to minority, female and community organizations, to schools with minority and female students and to minority and female recruitments and training organizations serving the Contractor's recruitment area and employment needs. Not later than one month prior to the date for the acceptance of applications for apprenticeship or other training by any recruitment source, the Contractor shall send written notification to organizations such as the above, describing the openings, screening procedures, and tests to be used in the selection process.

j. Encourage present minority and female employees to recruit other minority persons and women and, where reasonable, provide after school, summer and vacation employment to minority and female youth both on the site and in other areas of a Contractor's work force.

k. Validate all tests and other selection requirements where there is an obligation to do so under 41 CFR Part 60-3.

l. Conduct, at least annually, an inventory and evaluation at least of all minority and female personnel for promotional opportunities and encourage these employees to seek or to prepare for, through appropriate training, etc., such opportunities.

m. Ensure that seniority practices, job classifications, work assignments and other personnel practices, do not have a discriminatory effect by continually monitoring all personnel and employment related activities to ensure that the EEO policy and the Contractor's obligations under these specifications are being carried out.

n. Ensure that all facilities and company activities are nonsegregated except that separate or single-user toilet and necessary changing facilities shall be provided to assure privacy between the sexes.

o. Document and maintain a record of all solicitations of officers for subcontracts from minority and female construction contractors and suppliers, including circulation of solicitations to minority and female contractor associations and other business associations.

p. Conduct a review, at least annually, of all supervisor's adherence to and performance under the Contractor's EEO policies and affirmative action obligations.

8. Contractors are encouraged to participate in voluntary associations which assist in fulfilling one or more of their affirmative action obligations (7a through p). The efforts of a contractor association, joint contractor-union, contractor-community, or other similar group of which the contractor is a member and participant, may be asserted as fulfilling any one or more of its obligations under 7a through p of these Specifications provided that the contractor actively participates in the group, makes every effort to assure that the group has a positive impact on the employment of minorities and women in the industry, ensures that the concrete benefits of the program are reflected in the Contractor's minority and female workforce participation, makes a good faith effort to meet its individual goals and timetables, and can provide access to documentation which demonstrates the effectiveness of actions taken on behalf of the Contractor. The obligation to comply, however, is the Contractor's and failure of such a group to fulfill an obligation shall not be a defense for the Contractor's noncompliance.

9. A single goal for minorities and a separate single goal for women have been established. The Contractor, however, is required to provide equal employment opportunity and to take affirmative action for all minority groups, both male and female, and all women, both minority and non-minority. Consequently, the Contractor may be in violation of the Executive Order if a particular group is employed in a substantially disparate manner (for example, even though the Contractor has achieved its goals for women generally, the Contractor may be violation of the Executive Order if a specific minority group of women is underutilized).

10. The Contractor shall not use the goals and timetables or affirmative action standards to discriminate against any person because of race, color, creed, religion, national origin, sex, ancestry, age, marital status, status with respect to public assistance and/or disability.

11. The Contractor shall not enter into any Subcontract with any person or firm debarred from Government contracts pursuant to Executive Order 11246.

12. The Contractor shall carry out such sanctions and penalties for violation of these specifications and of the Equal Opportunity Clause, including suspension, termination and cancellation of existing subcontracts as may be imposed or ordered pursuant to Executive Order 11246, as amended, and its implementing regulations, by the Office of Federal Contract Compliance Programs. Any Contractor who fails to carry out such sanctions and penalties shall be in violation of these specifications and Executive Order 11246, as amended.

13. The Contractor, in fulfilling its obligations under these specifications, shall implement specific affirmative action steps, at least as extensive as those standards prescribed in paragraph 7 of these specifications, so as to achieve maximum results from its efforts to ensure equal employment opportunity. If the Contractor fails

to comply with the requirements of the Executive Order, the implementing regulations, or these specifications, the Director shall proceed in accordance with 41 CFR 60-4.8.

14. The Contractor shall designate a responsible official to monitor all employment related activity to ensure that the company EEO policy is being carried out, to submit reports relating to the provisions hereof as may be required by the Government and to keep records. Records shall at least include for each employee the name, address, telephone numbers, construction trade, union affiliation if any, employee identification number when assigned, social security number, race, sex, status (e.g., mechanic, apprentice, trainee, helper, or laborer), dates of changes in status, hours worked per week in the indicated trade, rate of pay, and locations at which the work was performed. Records shall be maintained in an easily understandable and retrievable form; however, to the degree that existing records satisfy this requirement, contractors shall not be required to maintain separate records.

15. Nothing herein provided shall be construed as a limitation upon the application of other laws which establish different standards of compliance or upon the application of requirements for the hiring of local or other area residents (e.g., those under the Public Works Employment Act of 1977 and the Community Development Block Grant Program).

Affirmative Action for Handicapped Workers

(applies to contracts in excess of $2,500)

(A) The Contractor will not discriminate against any employee or applicant for employment because of physical or mental handicap in regard to any position for which the employee or applicant is qualified. The Contractor agrees to take affirmative action to employ, advance in employment and otherwise treat qualified handicapped individuals without discrimination based upon their physical or mental handicap in all employment practices such as the following: Employment, upgrading, demotion or transfer, recruitment, advertising, layoff or termination, rates of pay or other forms of compensation, and selection for training, including apprenticeship.

(B) The Contractor agrees to comply with the rules, regulations, and relevant orders of the Secretary of Labor issued pursuant to the Act.

(C) In the event of the Contractor's noncompliance with the requirements of this clause, actions for noncompliance may be taken in accordance with the rules, regulations and relevant orders of the Secretary of Labor issued pursuant to the Act.

(D) The Contractor agrees to post in conspicuous places, available to employees and applicants for employment, notices in a form to be prescribed by the Director, provided by or through the contracting officer. Such notices shall state the Contractor's obligation under the law to take affirmative action to employ and advance in employment qualified handicapped employees and applicants for employment, and the rights of applicants and employees.

(E) The Contractor will notify each labor union or representative of workers with which it has a collective bargaining agreement or other contract understanding, that the Contractor is bound by the terms of Section 503 of the Rehabilitation Act of 1973, and is committed to take affirmative action to employ and advance in employment physically and mentally handicapped individuals.

(F) The Contractor will include the provisions of this clause in every subcontract or purchase order of $2,500 or more unless exempted by rules, regulations, or orders of the Secretary issued pursuant to Section 503 of the Act, so that such provisions will be binding upon each subcontractor or vendor. The Contractor will take such action with respect to any subcontract or purchase order as the Director of the Office of Federal Contract Compliance Programs may direct to enforce such provisions, including action for noncompliance.

Affirmative Action for Disabled Veterans and Veterans of the Vietnam Era

(applies to contracts in excess of $10,000)

(A) The Contractor will not discriminate against any employee or applicant for employment because he or she is a disabled veteran or veteran of the Vietnam era in regard to any position for which the employee or applicant for employment is qualified. The Contractor agrees to take affirmative action to employ, advance in employment and otherwise treat qualified disabled veterans and veterans of the Vietnam era without discrimination based upon their disability or veterans status in all employment practices such as the following: Employment, upgrading, demotion or transfer, recruitment, advertising, layoff or termination, rates of pay or other forms of compensation, and selection for training, including apprenticeship.

(B) The Contractor agrees that all suitable employment openings of the Contractor which exist at the time of the execution of this contract and those which occur during the performance of this contract, including those not generated by this contract and including those occurring at an establishment of the Contractor other than the one wherein the contract is being performed but excluding those of independently operated corporate affiliates, shall be listed at an appropriate local office of the State employment service system wherein the opening occurs. The Contractor further agrees to provide such reports to such local office regarding employment openings and hires as may be required.
State and local government agencies holding Federal contracts of $10,000 or more shall also list all their suitable openings with the appropriate office of the State employment service, but are not required to provide those reports set forth in paragraphs (D) and (E).

(C) Listing of employment openings with the employment service system pursuant to this clause shall be made at least concurrently with the use of any other recruitment source or effort and shall involve the normal obligations which attach to the placing of a bona fide job order, including the acceptance of referrals of veterans and non-veterans. The listing of employment openings does not require the hiring of any particular job applicant or from any particular group of job applicants, and nothing herein is intended to relieve the Contractor from any requirements in Executive Orders of regulations regarding nondiscrimination in employment.

(D) The reports required by paragraph (B) of this clause shall include, but not be limited to, periodic reports which shall be filed at least quarterly with the appropriate local office or, where the Contractor has more than hiring location in a State, with the central office of that State employment service. Such reports shall indicate for each hiring location (1) the number of individuals hired during the reporting period, (2) the number of non-disabled veterans of the Vietnam era hired, (3) the number of disabled veterans of the Vietnam era hired, and (4) the total number of disabled veterans hired. The reports should include covered veterans hired for on-the-job training under 38 U.S.C. 1787. The Contractor shall maintain at each hiring location copies of the reports submitted until the expiration of one year after final payment under the contract, during which time these reports and related documentation shall be made available, upon request, for examination by any authorized representatives of the contracting officer of the Secretary of Labor. Documentation would include personnel records respecting job openings, recruitment and placement.

(E) Whenever the Contractor becomes contractually bound to the listing provisions of this clause, it shall advise the employment service system in each State where it has establishments of the name and location of each hiring location in the State. As long as the Contractor is contractually bound to these provisions, and has so

advised the State system, there is no need to advise the State system of subsequent contracts. The Contractor may advise the State system when it is no longer bound by this contract clause.

(F) This clause does not apply to the listing of employment openings which occur and are filled outside of the 50 States, the District of Columbia, Puerto Rico, Guam, and the Virgin Islands.

(G) The provisions of paragraphs (B), (C), (D), and (E) of this clause do not apply to openings which the Contractor proposes to fill from within his own organization or to fill pursuant to a customary and traditional employer-union hiring arrangement for that opening.

(H) As used in this clause:

(1) "All suitable employment openings" includes, but is not limited to, openings which occur in the following job categories: Production and non-production; plant and office; laborers and mechanics; supervisory and non-supervisory; technical; and executive, administrative, and professional openings as are compensated on a salary basis of less than $25,000 per year. This term includes full-time employment, temporary employment of more than 3 days' duration, and part-time employment. It does not include openings which the Contractor proposes to fill from within his own organization or to fill pursuant to a customary and traditional employer-union hiring arrangement nor openings in an educational institution which are restricted to students of that institution. Under the most compelling circumstances an employment opening may not be suitable for listing, including such situations where the needs of the Government cannot reasonably be otherwise supplied, where listing would be contrary to national security, or where the requirement of listing would otherwise not be for the best interest of the Government.

(2) "Appropriate office of the State employment service system" means the local office of the Federal-State national system of public employment offices with assigned responsibility for serving the area where the employment opening is to be filled, including the District of Columbia, Guam, Puerto Rico, and the Virgin Islands.

(3) "Openings which the Contractor proposes to fill from within his own organization" means employment openings for which no consideration will be given to persons outside the Contractor's organization (including any affiliates, subsidiaries, and the parent companies) and includes any openings which the Contractor proposes to fill from regularly established "recall" lists.

(4) "Openings which the Contractor proposes to fill pursuant to a customary and traditional employer-union hiring arrangement" means employment openings which the Contractor proposes to fill from union halls, which is part of the customary and traditional hiring relationship which exists between the Contractor and representatives of his employees.

(I) The Contractor agrees to comply with the rules, regulations, and relevant orders of the Secretary of Labor issued pursuant to the Act.

(J) In the event of the Contractor's noncompliance with the requirements of this clause, actions for noncompliance may be taken in accordance with the rules, regulations and relevant orders of the Secretary of Labor issued pursuant to the Act.

(K) The Contractor agrees to post in conspicuous places, available to employees and applicants for employment, notices in a form to be prescribed by the Director, provided by or through the contracting officer. Such notices shall state the Contractor's obligation under the law to take affirmative action to employ and advance in employment qualified disabled veterans and veterans of the Vietnam era for employment, and the rights of applicants and employees.

(L) The Contractor will notify each labor union representative of workers with which it has a collective bargaining agreement or other contract understanding, that the Contractor is bound by the terms of the Vietnam Era Veterans Readjustment Assistance Act, and is committed to take affirmative action to employ and advance qualified disabled veterans and veterans of the Vietnam era..

(M) The Contractor will include the provisions of this clause in every subcontract or purchase order of $10,000 or more unless exempted by rules, regulations, or orders of the Secretary issued pursuant to the Act, so that such provisions will be binding upon each subcontractor or vendor. The Contractor will take such action with respect to any subcontract or purchase order as the Director of the Office of Federal Contract Compliance Programs may direct to enforce such provisions, including action for noncompliance.

Section 12

Employment Opportunities - "HUD Section 3"

General

These requirements apply to the City of Duluth contracts receiving assistance under the U.S. Department of Housing and Urban Development (HUD) Community Development Block Grant (CDBG) Program.

Type of Covered Projects

24CFR570.607 (b) of the HUD CDBG Program Regulations state in part "... that employment and other economic opportunities arising in connection with housing rehabilitation, housing construction, or other public construction projects shall to the greatest extent feasible, and consistent with existing Federal, State, and local laws and regulations be given to low- and very low-income persons.

Thresholds

In accordance with the provisions of 24CFR135.3(a) (3) (ii) (A), the requirements of this Section apply to those recipients as defined at 24CFR135.5 when the amount of this contract exceeds $200,000.

In addition, in accordance with the provisions of 24CFR135.3 (a) (3) (ii) (B), the requirements of this Section apply to any contractor or subcontractor whose contract exceeds $100,000 as a result of assistance provided under this contract.

Requirements (Section 3 Clause)

(A) The work to be performed under this contract is subject to the requirements of Section 3 of the Housing and Urban Development Act of 1968, as amended, 12 U.S.C. 1701u (section 3). The purpose of Section 3 is to ensure that employment and other economic opportunities generated by HUD assistance or HUD-assisted projects covered by section 3, shall, to the greatest extent feasible, be directed to low- and very low-income persons, particularly persons who are recipients of HUD assistance for housing.

(B) The parties to this contract agree to comply with HUD's regulations in 24 CFR part 135, which implement section 3. As evidenced by their execution of this contract, the parties to this contract certify that they are under no contractual or other impediment that would prevent them from complying with the part 135 regulations.

(C) The contractor agrees to send to each labor organization or representative of workers with which the contractor has a collective bargaining agreement, or other understanding, if any, a notice advising the labor organization or workers' representative of the contractor's commitments under this section 3 clause, and will post copies of the notice in conspicuous places at the work site where both employees and applicants for training and employment positions can see the notice. The

notice shall describe the section 3 preference, shall set forth minimum number and job titles subject to hire, availability of apprenticeship and training positions, the qualifications for each; and the name and location of the person(s) taking applications for each of the positions; and the anticipated date the work shall begin.

(D) The Contractor agrees to include this section 3 clause in every subcontract subject to compliance with regulations in 24 CFR part 135, and agrees to take appropriate action, as provided in an applicable provision of the subcontract or in this section 3 clause, upon a finding that the subcontractor is in violation of the regulations in 24 CFR part 135. The contractor will not subcontract with any subcontractor where the contractor has notice or knowledge that the subcontractor has been found in violation of the regulations in 24 CFR part 135.

(E) The contractor will certify that any vacant employment positions, including training positions, that are filled (1) after the contractor is selected but before the contract is executed, and (2) with persons other than those to whom the regulations of 24 CFR part 135 require employment opportunities to be directed, were not filled to circumvent the contractor's obligation under 24 CFR part 135.

(F) Noncompliance with HUD's regulations in 24 CFR part 135 may result in sanctions, termination of this contract for default, and debarment or suspension from future HUD-assisted contracts.

Section 13

Federal Requirements for Minority/Women Business Enterprises Contract Guidance - MPFA

General

Municipalities that receive loan funding must comply with Federal requirements concerning utilization of Minority Business Enterprises (MBE) and Women's Business Enterprises (WBE). These requirements are designed to encourage the prime contractors to utilize MBEs and WBEs whenever procurement opportunities occur.

Regulation

40 C.F.R. Section 35.3145(d) Application of other Federal Authorities, M/WBE Requirements
Executive Orders No. 11625, 12138 and 12432 - Promoting the use of M/WBEs
Section 129 of Public Law 100-590 - Small Business Administration Reauthorization and Amendment Act of 1988
Regulations detailed in the EPA's *Cross-Cutting Federal Authorities - Clean Water Act State Revolving Fund Program and Safe Drinking Water Act State Revolving Fund Program*

Implementation

The "fair share" target percentage participation proposed for this project is 3.5 percent (3.5%) for MBE and 11.5 percent (11.5%) for WBE.

If the Contractor intends to let any subcontractors for a portion of the work, the Contractor shall take affirmative steps to assure that minority and women businesses are utilized when possible as sources of supplies, equipment, construction and services. Affirmative steps shall include the following:

a) Include qualified minority businesses on solicitation lists.
b) Assure that minority businesses are solicited whenever they are potential sources.
c) When economically feasible, divide total requirements into smaller tasks or quantities so as to permit maximum small and minority business participation.
d) Where the requirement permits, establish delivery schedules, which will encourage participation by minority businesses.
e) Use the services and assistance of the Office of Minority Business Enterprise of the Department of Commerce.

The low bidder will be required to submit to the City of Duluth documentation of his good faith efforts to meet the targeted goals of utilizing MBEs and WBEs.

Section 14 - Forms

Minnesota Department of Transportation and City of Duluth, Minnesota funded certified payroll forms

- MnDOT Prime Contractor's-Subcontractor's Statement of Compliance form (12/2010)
  www.dot.state.mn.us/const/labor/forms.html
- Certified Payroll Forms
  http://www.dol.gov/forms/whd/wh347.pdf
  use front side only

U. S. Department of Housing and Urban Development and federal government funded certified payroll forms

- Statement of Compliance Form & Certified Payroll Forms
  http://www.dol.gov/forms/whd/wh347.pdf
  (use reverse side for Statement of Compliance form)
- MnDOT Prime Contractor's-Subcontractor's Statement of Compliance form (12/2010)
  www.dot.state.mn.us/const/labor/forms.html

Minnesota Department of Transportation Trucking Requirements

- Month End Trucking Report Form A and Form B
- Month End Trucking Report Statement of Compliance
- Definitions, instructions, forms:
  www.dot.state.mn.us/const/labor/forms.html

General Decision Number: MN160041 09/02/2016 MN41

Superseded General Decision Number: MN20150041

State: Minnesota

Construction Type: Building

County: St Louis County in Minnesota.

BUILDING CONSTRUCTION PROJECTS (does not include single family homes or apartments up to and including 4 stories).

Note: Under Executive Order (EO) 13658, an hourly minimum wage of $10.15 for calendar year 2016 applies to all contracts subject to the Davis-Bacon Act for which the solicitation was issued on or after January 1, 2015. If this contract is covered by the EO, the contractor must pay all workers in any classification listed on this wage determination at least $10.15 (or the applicable wage rate listed on this wage determination, if it is higher) for all hours spent performing on the contract in calendar year 2016. The EO minimum wage rate will be adjusted annually. Additional information on contractor requirements and worker protections under the EO is available at www.dol.gov/whd/govcontracts.

Modification Number	Publication Date
0	01/08/2016
1	03/04/2016
2	04/15/2016
3	05/20/2016
4	06/17/2016
5	06/24/2016
6	07/01/2016
7	07/22/2016
8	07/29/2016
9	08/26/2016
10	09/02/2016

* ASBE0049-007 06/01/2016

	Rates	Fringes
ASBESTOS WORKER/HEAT & FROST INSULATOR (Includes the application of all insulating materials, protective coverings, coatings & finishes to all types of mechanical systems)	$ 28.77	24.70

BOIL0647-007 01/01/2013

Rates Fringes

BOILERMAKER.....$ 32.40 25.37

BRMN0001-050 05/01/2015

ST LOUIS (Remaining Northern part)

Rates Fringes

TILE SETTER.....$ 24.59 20.98

BRMN0003-008 05/01/2016

ST. LOUIS COUNTY (City of Duluth and South of a line between Townships #54 & #55, 2 miles north of Cotton)

Rates Fringes

BRICKLAYER.....$ 32.91 22.82

BRMN0003-011 05/01/2008

ST. LOUIS (City of Duluth and south of Township Line 55)

Rates Fringes

TILE SETTER.....$ 24.13 17.38

BRMN0016-002 05/01/2016

ST. LOUIS COUNTY (North of a line between Townships #54 & #55, 2 miles north of Cotton)

Rates Fringes

BRICKLAYER.....$ 32.47 23.26

CARP0068-005 07/01/2012

Rates Fringes

SOFT FLOOR LAYER.....$ 30.94 11.75

CARP0361-012 05/01/2015

DULUTH AREA including Alborn, Arnold, Bartlett, Birch, Brookstone, Canyon, Clinton, Culver, Floodwood, Gowan, Island, Kelsey, Lakewood, Meadowlands, Munger, Palmers, Payne, Prasit, Shaw, Taft)

Rates Fringes

CARPENTER (Including
Acoustical Installation,
Drywall Hanging, Form Work &
Overhead Door Installation).....$ 29.55 16.08

CARP0606-001 05/01/2015

EXCLUDING DULUTH AREA

Rates Fringes

CARPENTER (Including
Acoustical Installation,
Drywall Hanging, Form Work &
Overhead Door Installation).....$ 29.45 14.37

ELEC0242-012 05/29/2016

ST. LOUIS (South part bounded on the north by the north line of
Kelsey Township extended east & west)

Rates Fringes

ELECTRICIAN.....$ 34.92 25.05

ELEC0294-006 05/29/2016

ST. LOUIS (North part bounded on the south by the south line of
Ellsburg Township, extended east & west)

Rates Fringes

ELECTRICIAN.....$ 35.60 71.72%

ENGI0049-045 05/01/2016

Rates Fringes

OPERATOR: Power Equipment
GROUP 1.....$ 39.14 18.40
GROUP 2.....$ 38.80 18.40
GROUP 3.....$ 37.39 18.40
GROUP 4.....$ 37.05 18.40
GROUP 5.....$ 36.13 18.40
GROUP 6.....$ 34.62 18.40
GROUP 7.....$ 33.50 18.40
GROUP 8.....$ 31.49 18.40

POWER EQUIPMENT OPERATOR CLASSIFICATIONS

GROUP 1: Truck & Crawler Crane with 200' of Boom & Over, including Jib ($.50 premium with 300' of Boom & over, including jib); & Tower Crane 250' & Over.

GROUP 2: Truck & Crawler Crane with 150' of Boom, up to but not including 200' of Boom, including Jib; & Tower Crane 200' & Over.

GROUP 3: Traveling Tower Crane; Truck & Crawler Crane, up to but not including 150' of Boom, including Jib; Tower Crane (Stationary) up to 200'; All-Terrain Vehicle Crane, Boom Truck over 100 ft.

GROUP 4: Backhoe/Track/Trackhoe, Hoist (3 drums or more); Overhead Crane (inside building perimeter), Excavator.

GROUP 5: Asphalt Spreader, Bulldozer, Curb Machine, Drill, Forklift, Compressor 450 CFM or over (2 or more machines); Boom Truck up to 100 ft, Loader over 1 cu yd, Hoist (1 or 2 drums); Mechanic; Milling Machine, Roller, Scraper, Tractor over D2.

GROUP 6: Bobcat/Skid Loader, Loader up to 1 cu. yd., Tractor D2 or similar size.

GROUP 7: Compressor 600 CFM or over, Crane Oiler.

GROUP 8: Oiler.

IRON0512-018 06/05/2016

	Rates	Fringes
IRONWORKER, ORNAMENTAL, REINFORCING, AND STRUCTURAL.....	$ 31.54	24.90

LABO1091-011 01/01/2016

	Rates	Fringes
LABORER (ASBESTOS ABATEMENT)		
Removal from Floors, Walls & Ceilings.....	$ 29.20	17.43

LABO1091-013 05/01/2012

ST. LOUIS (South of T 55 N)

	Rates	Fringes
Laborers:		
GROUP 1.....	$ 21.95	14.93

GROUP 2.....$ 22.10 14.93
GROUP 3.....$ 22.35 14.93
GROUP 4.....$ 22.65 14.93

LABORER CLASSIFICATIONS

GROUP 1: Common or General, Asphalt Shoveler, Carpenter Tender, Form Stripping

GROUP 2: Vibrating Plate

GROUP 3: Pipelayer

GROUP 4: Mason Tender (Brick, Cement/Concrete)

LABO1097-008 05/01/2012

ST.LOUIS (North of T 55N)

Rates Fringes

LABORER
GROUP 1.....$ 20.62 16.25
GROUP 2.....$ 21.02 16.25

LABORERS CLASSIFICATIONS

GROUP 1 - Common or General, Asphalt Shoveler, Carpenter Tender, Form Stripping, Mason Tender (Brick, Cement/Concrete)

GROUP 2 - Pipelayer, Vibrating Plate

PAIN0106-001 05/01/2013

Rates Fringes

GLAZIER.....$ 26.28 15.47

FOOTNOTE:
1 to 4 years service - 1 week paid vacation; 5 to 11 years - 2 weeks paid vacation; 11 years or more - 3 weeks paid vacation

---

PAIN0106-013 05/01/2014

Rates Fringes

Painters:
New:
Brush, Roller.....$ 28.81 15.27

Spray, Drywall
Finisher/Taper.....$ 29.41 15.27
Repaint:
Brush, Roller.....$ 27.31 15.27
Spray, Drywall
Finisher/Taper.....$ 27.91 15.27

PLAS0633-024 05/01/2016

ST. LOUIS (North of White Face River) COUNTIES

	Rates	Fringes
CEMENT MASON/CONCRETE FINISHER	$ 29.46	15.77

PLAS0633-059 05/01/2016

CARLTON & ST. LOUIS (South of T 55N) COUNTIES

	Rates	Fringes
CEMENT MASON/CONCRETE FINISHER	$ 30.86	17.13

PLUM0011-019 05/02/2016

ST. LOUIS (South of an east-west line drawn through Cotton)

	Rates	Fringes
PLUMBER/PIPEFITTER	$ 39.07	18.73

PLUM0589-007 05/01/2016

ST. LOUIS (North of an East- West line drawn through Cotton)

	Rates	Fringes
PLUMBER/PIPEFITTER		
Contracts $90,000.00 and under	$ 39.25	18.66
Contracts over $90,000.00	$ 39.25	18.66

ROOF0096-024 07/01/2015

ST. LOUIS (South of Hwy 16, excluding City of Forbes)

	Rates	Fringes
ROOFER	$ 32.15	14.67

ROOF0096-025 05/01/2016

ST. LOUIS (Remaining Northern two-thirds)

Rates Fringes

ROOFER.....$ 29.00 11.82

SHEE0010-045 05/01/2009

ST. LOUIS (Southern one-third)

Rates Fringes

SHEET METAL WORKER (Including
HVAC Duct Installation).....$ 31.61 16.52

SHEE0010-056 05/01/2008

ST. LOUIS (Northern two-thirds)

Rates Fringes

SHEET METAL WORKER (Including
HVAC Duct Installation).....$ 29.99 16.08

SUMN2009-050 07/27/2009

Rates Fringes

LABORER: Landscape.....$ 12.88 4.61

TRUCK DRIVER: Dump Truck.....$ 19.15 5.70

WELDERS - Receive rate prescribed for craft performing
operation to which welding is incidental.

==========

Unlisted classifications needed for work not included within
the scope of the classifications listed may be added after
award only as provided in the labor standards contract clauses
(29CFR 5.5 (a) (1) (ii)).

The body of each wage determination lists the classification
and wage rates that have been found to be prevailing for the
cited type(s) of construction in the area covered by the wage
determination. The classifications are listed in alphabetical
order of "identifiers" that indicate whether the particular
rate is a union rate (current union negotiated rate for local),
a survey rate (weighted average rate) or a union average rate
(weighted union average rate).

Union Rate Identifiers

A four letter classification abbreviation identifier enclosed in dotted lines beginning with characters other than "SU" or "UAVG" denotes that the union classification and rate were prevailing for that classification in the survey. Example: PLUM0198-005 07/01/2014. PLUM is an abbreviation identifier of the union which prevailed in the survey for this classification, which in this example would be Plumbers. 0198 indicates the local union number or district council number where applicable, i.e., Plumbers Local 0198. The next number, 005 in the example, is an internal number used in processing the wage determination. 07/01/2014 is the effective date of the most current negotiated rate, which in this example is July 1, 2014.

Union prevailing wage rates are updated to reflect all rate changes in the collective bargaining agreement (CBA) governing this classification and rate.

Survey Rate Identifiers

Classifications listed under the "SU" identifier indicate that no one rate prevailed for this classification in the survey and the published rate is derived by computing a weighted average rate based on all the rates reported in the survey for that classification. As this weighted average rate includes all rates reported in the survey, it may include both union and non-union rates. Example: SULA2012-007 5/13/2014. SU indicates the rates are survey rates based on a weighted average calculation of rates and are not majority rates. LA indicates the State of Louisiana. 2012 is the year of survey on which these classifications and rates are based. The next number, 007 in the example, is an internal number used in producing the wage determination. 5/13/2014 indicates the survey completion date for the classifications and rates under that identifier.

Survey wage rates are not updated and remain in effect until a new survey is conducted.

Union Average Rate Identifiers

Classification(s) listed under the UAVG identifier indicate that no single majority rate prevailed for those classifications; however, 100% of the data reported for the classifications was union data. EXAMPLE: UAVG-OH-0010 08/29/2014. UAVG indicates that the rate is a weighted union average rate. OH indicates the state. The next number, 0010 in the example, is an internal number used in producing the wage determination. 08/29/2014 indicates the survey completion date for the classifications and rates under that identifier.

A UAVG rate will be updated once a year, usually in January of

each year, to reflect a weighted average of the current negotiated/CBA rate of the union locals from which the rate is based.

WAGE DETERMINATION APPEALS PROCESS

1.) Has there been an initial decision in the matter? This can be:

* an existing published wage determination
* a survey underlying a wage determination
* a Wage and Hour Division letter setting forth a position on a wage determination matter
* a conformance (additional classification and rate) ruling

On survey related matters, initial contact, including requests for summaries of surveys, should be with the Wage and Hour Regional Office for the area in which the survey was conducted because those Regional Offices have responsibility for the Davis-Bacon survey program. If the response from this initial contact is not satisfactory, then the process described in 2.) and 3.) should be followed.

With regard to any other matter not yet ripe for the formal process described here, initial contact should be with the Branch of Construction Wage Determinations. Write to:

Branch of Construction Wage Determinations
Wage and Hour Division
U.S. Department of Labor
200 Constitution Avenue, N.W.
Washington, DC 20210

2.) If the answer to the question in 1.) is yes, then an interested party (those affected by the action) can request review and reconsideration from the Wage and Hour Administrator (See 29 CFR Part 1.8 and 29 CFR Part 7). Write to:

Wage and Hour Administrator
U.S. Department of Labor
200 Constitution Avenue, N.W.
Washington, DC 20210

The request should be accompanied by a full statement of the interested party's position and by any information (wage payment data, project description, area practice material, etc.) that the requestor considers relevant to the issue.

3.) If the decision of the Administrator is not favorable, an interested party may appeal directly to the Administrative

Review Board (formerly the Wage Appeals Board). Write to:

Administrative Review Board
U.S. Department of Labor
200 Constitution Avenue, N.W.
Washington, DC 20210

4.) All decisions by the Administrative Review Board are final.

==========

END OF GENERAL DECISION

PROJECT LABOR AGREEMENT

NO STRIKE, NO LOCKOUT

PUBLIC SECTOR

CITY OF DULUTH

&

Vendor

Project name

Project No.

INDEX	
AGREEMENT	1
ARTICLE I - PURPOSE	2
ARTICLE II - SCOPE OF THE AGREEMENT	2
ARTICLE III - UNION RECOGNITION AND REPRESENTATION	4
ARTICLE IV - LABOR HARMONY CLAUSE	5
ARTICLE V - WORK STOPPAGES AND LOCKOUTS	6
ARTICLE VI - DISPUTES AND GRIEVANCES	6
ARTICLE VII - JURISDICTIONAL DISPUTES	6
ARTICLE VIII - NO DISCRIMINATION	7
ARTICLE IX - SAVINGS AND SEPARABILITY	7
ARTICLE X - DURATION OF THE AGREEMENT	7
SCHEDULE “A”	10

AGREEMENT

This Project Labor Agreement (hereinafter, the "Agreement"), effective as of the date of attestation by the City Clerk, by and between the various contractors engaged in the construction of facilities to be known as the (Project). The parties to this Agreement are the Building and Construction Trades Council, on behalf of its affiliated Local Unions (hereinafter "Union" or "Unions"), the City of Duluth (hereinafter "Owner") and Contractor (hereinafter "Construction Manager/General Manager," "Contractor," and "Contractors").

It is understood by the parties to this Agreement that it is the policy of the Owner that the construction work covered by this Agreement shall be contracted to Contractors who agree to be bound by the terms of this Agreement. Therefore, the Union agrees that other Contractors may execute the Agreement for the purpose of covering that work. The Construction Manager/General Contractor shall monitor compliance with this Agreement by all Contractors who through their execution of this Agreement, together with their subcontractors, have become bound hereto.

The term "Contractor" shall include all Contractors and subcontractors of whatever tier engaged in on-site construction work within the scope of this Agreement.

The Union and all signatory Contractors agree to abide by the terms and conditions contained in this Agreement with respect to the administration of the Agreement by the Owner and the performance of the construction by the Contractor of the Project. This Agreement represents the complete understanding of the parties, and it is further understood that no Contractor party is required to sign any other agreement as a condition of performing work within the scope of this Agreement. No practice, understanding or agreement between a Contractor and a Union party which is not explicitly set forth in this Agreement shall be binding on any other party unless endorsed in writing by the Project Contractor.

ARTICLE I - PURPOSE

The (Project), an undertaking of the Owner, is a public project which will employ numbers of skilled and unskilled workers. Construction of the Project will entail utilization of the construction industry in an area having multiple labor contracts and employer associations. Consequently, conflicts within labor-management relations could cause delay or disruption of the efficient completion of the .project unless maximum cooperation of all segments of the construction industry is obtained. This Agreement is to establish as the minimum standards on the Project the hours and working conditions as those prevailing for the largest number of workers engaged in the same classes of work within the area.

It is in the public interest that the Project progress and be completed in an expeditious and efficient manner, free of disruption or delay of any kind. Therefore, it is essential to secure optimum productivity and to eliminate any delays in the work. In recognition of the special needs of this Project and to maintain a spirit of harmony, labor-management peace and stability during the term of this Project Labor Agreement, the parties agree to establish effective and binding methods for the settlement of all misunderstandings, disputes or grievances which may arise. Therefore, the Unions agree not to engage in any strike, slowdown or interruption of work and the Contractor agrees not to engage in any lockout.

ARTICLE II - SCOPE OF THE AGREEMENT

Section 1. This Agreement, hereinafter designated as the "Project Labor Agreement" or "Agreement," shall apply and is limited to all construction work included in all Bid Categories for the (Project), under the direction of the signatory Contractors and performed by those Contractor(s) of whatever tier which have contracts awarded for such work on and after the effective date of this Agreement with regard to the Project.

Such Project is generally described as the construction of: Project

Section 2. It is agreed that all direct subcontractors of a Contractor, of whatever tier, who have been awarded contracts for work covered by this Agreement on or after the effective date of this Agreement shall be required to accept and be bound by the terms and conditions of the Project Labor Agreement.

Section 3. The provisions of this Project Labor Agreement shall apply to all craft employees represented by any Union listed in Schedule A hereto attached and shall not apply to other field personnel or managerial or supervisory employees as defined by the National Labor Relations Act.

Section 4. All employees covered by this Agreement shall be classified in accordance with work performed and paid the base hourly wage rates for those classifications as specified in the attached Schedule A.

Section 5. The Contractors agree to pay contributions to the established employee benefit funds in the amounts designated in the appropriate Schedule A.

Contractors that are not signatory to a collective bargaining agreement beyond the scope of this Agreement ("PLA contractor") may select to participate in the legally established industry health reimbursement arrangement ("HRA") plan, in lieu of contributing to the respective bona fide benefit funds as designated in Schedule A. The amount of the contribution is based on the difference between the contribution amount of the bona fide Schedule A benefit funds and the cost of the PLA contractor's bona fide non-discretionary plans. Contributions must be made on behalf of named employees. Participating contractors will submit to the Trustees of the HRA trust and plan a copy of their plan, summary plan description, and the premium structure for workers covered under the PLA contractor's bona fide, non-discretionary plans. The value of the PLA contractor's benefit plans are subject to confirmation by the Trustees of the HRA trust and plan. This may include an independent audit according to a policy as established by the Trustees. Contractors are required to submit certified payroll reports to the Trustees or authorized administrator in order to confirm compliance with the terms of the HRA trust and plan.

The Contractors adopt and agree to be bound by the written terms of the legally-established Trust Agreements (or in lieu thereof, the aforementioned HRA plan and trust including any policies) specifying the detailed basis on which payments are to be made into, and benefits paid out of, such Trust Funds. The Contractors authorize the parties to such Trust Agreements to appoint trustees and successor trustees to administer the Trust funds and hereby ratify and accept the Trustees so appointed as if made by the Contractors.

Section 6. In the event of any conflict between any provisions of this Agreement and in the Local Area Agreements, the terms of this Agreement will be applied. In other words, where a subject covered by the provisions of this Project Labor Agreement is also covered by the Local Area Agreement the provisions of this Project Labor Agreement shall prevail. Where a subject is covered by the Local Area Agreement and not covered by this Project Labor Agreement, the Local Area Agreement provisions shall prevail.

Section 7. This Agreement shall only be binding on the signatory parties hereto and shall not apply to the parents, affiliates, subsidiaries, or other ventures of any such party.

Section 8. This Agreement shall be limited to work historically recognized as construction work. Nothing contained herein shall be construed to prohibit, restrict, or interfere with the performance of any other operation, work or function which may occur in or around the Project site or be associated with the development of the Project, or with the ongoing operations of the Owner.

Section 9. It is understood that the liability of any Contractor and the liability of the separate Unions under this Agreement shall be several and not joint. The Union agrees that this Agreement does not have the effect of creating any joint employment status between or among Owner and any Contractor.

Section 10. All workers delivering fill, sand, gravel, crushed rock, transit/concrete mix, asphalt or other similar materials and all workers removing any materials from the construction site as required by the specifications are subject to the provisions of the Minnesota state

prevailing wage law and are entitled to the appropriate area standard wage. For purposes of this contract, such materials are for specified future use and per Minnesota state prevailing wage law delivery and pickup of the above-listed materials constitutes incorporation.

ARTICLE III - UNION RECOGNITION AND REPRESENTATION

Section 1. The Contractor recognizes the Union as the sole and exclusive bargaining representative of all craft employees working on facilities within the scope of this Agreement.

Section 2. Authorized representatives of the Union shall have access to the Project, provided they do not interfere with the work of employees and further provided that such representatives fully comply with the posted visitor and security and safety rules of the Project.

ARTICLE IV - LABOR HARMONY CLAUSE

The contractor shall furnish labor that can work in harmony with all other elements of labor employed on that (Project) and shall submit a labor harmony plan to demonstrate how this will be done. “Harmony” shall include the provision of labor that will not, either directly or indirectly, cause or give rise to any work disruptions, slow downs, picketing, stoppages, or any violence or harm to any person or property while performing any work, or activities incidental thereto at the (project). The labor harmony plan should include the company's labor management policies, collective bargaining agreements if any and their expiration dates, past labor relations history, a listing of activities anticipated under this contract that may potentially cause friction with on-site workers, and procedures the company will undertake to eliminate this friction.

The contractor agrees that it shall require every lower-tier subcontractor to provide labor that will work in harmony with all other elements of labor employed in the work, and will include the provisions contained in the paragraph above, in every lower-tier subcontract let for work under this contract.

The requirement to provide labor that can work in harmony with all other elements of labor employed in the work throughout the contract performance is a material element of this contract. Failure by the contractor or any of its lower tier subcontractors to comply with this requirement shall be deemed a material breach of the contract which will subject the contractor to all rights and remedies the city of Duluth may have, including without limitation the right to terminate the contract.

ARTICLE V - WORK STOPPAGES AND LOCKOUTS

Section 1. There shall be no strike, picketing, work stoppages, slowdowns or other disruptive, activity for any reason by the Union or employees against any Contractor covered under this Agreement, and there shall be no lockout by the Contractor. Failure of any Union or employee to cross any picket line established by any union, signatory or non-signatory, or any other organization, at or in proximity to the Project site is a violation of this Article.

Section 2. Any party alleging a breach of Section 1, of Article IV shall have the right to petition a court for temporary and permanent injunctive relief. The moving party need not show the existence of irreparable harm, and shall be required to post bond only to secure payment of court costs and attorney fees as may be awarded by the court.

ARTICLE VI - DISPUTES AND GRIEVANCES

Section 1. This Agreement is intended to provide close cooperation between management and labor. The Construction Manager/General Contractor and the Building and Construction Trades Council shall each assign a representative to this Project for the purpose of assisting the Local Unions, together with the Contractor, to complete the construction of the Project economically, efficiently, continuously and without interruption, delays or work stoppages.

Each Contractor shall hold a pre-job conference with the Union and Construction Manager/General Contractor to clear up any project question and work assignments in which there is thought to be a difference in opinion. Every effort will be made to hold such conference well in advance of actual work performance.

Section 2. The Contractor, Union, and employees collectively and individually, realize the importance to all parties to maintain continuous and uninterrupted performance of the work of the Project, and agree to resolve disputes over grievances in accordance with the arbitration provisions set forth in the Local Area Agreements in effect with the Unions listed in Schedule A attached hereto.

ARTICLE VII - JURISDICTIONAL DISPUTES

Section 1. There will be no strikes, work stoppages, slowdowns, or other disruptive activity arising out of any jurisdictional dispute. Pending the resolution of the dispute, the work shall continue uninterrupted as assigned by the Contractor.

Section 2. Building construction work shall be assigned by the Contractor in accordance with the procedural rules of the Plan for the Settlement of Jurisdictional Disputes in the Construction Industry (hereinafter the "Plan"). Any jurisdictional dispute over the Contractor's assignment of work shall be settled in accordance with the provisions of the Plan.

Section 3. Where a jurisdictional dispute involves the International Brotherhood of Teamsters, it shall be referred for resolution to that International Union and the disputing International Union. The resolution of the dispute shall be reduced to writing, signed by the authorized representative of the International Unions and the Contractor. The assignments made by the Contractor shall be followed until such time as the dispute is resolved in accordance with this Section.

ARTICLE VIII - NO DISCRIMINATION

Section 1. The Contractor and Union agree that they will not discriminate against any employee or applicant for employment because of his or her membership or nonmembership in a Union or based upon race, color, religion, sex, national origin or age in any manner prohibited by law or regulation.

Section 2. Any complaints regarding application of the provisions of Section 1 should be brought to the immediate attention of the involved Contractor for consideration and resolution.

Section 3. The use of the masculine or feminine gender in this Agreement shall be construed as including both genders.

ARTICLE IX - SAVINGS AND SEPARABILITY

It is not the intention of the parties to violate any laws governing the subject matter of this Agreement. The parties hereto agree that in the event any provisions of the Agreement are finally held determined to be illegal or void as being in contravention of any applicable law, the remainder of the Agreement shall remain in full force and effect unless the part or parts so found to be void are wholly inseparable from the remaining portions of this Agreement. Further, the contractor and Union agree that if and when any and all provisions of this Agreement are finally held or determined to be illegal or void by Court of competent jurisdiction, the parties will promptly enter into negotiations concerning the substance affected by such decision for the purpose of achieving conformity with the requirements of an applicable law and the intent of the parties hereto.

ARTICLE X DURATION OF THE AGREEMENT

The Project Labor Agreement shall be effective as of the date of attestation by the City Clerk, and shall continue in effect for the duration of the Project construction work described in Article II hereof Construction of any phase, portion, section or segment of the project shall be deemed complete when such phase, portion, section or segment has been turned over to the Owner and has received the final acceptance from the Owner's representative.

Since there are provisions herein for no strikes or lockouts in the event any changes are negotiated and implemented under a Local Area Agreement during the term of this Agreement, the Contractor agrees that, except as specified herein, such changes shall be recognized and shall apply retroactively to the termination date in the particular Local Agreement involved. Each Contractor which has a Local Agreement with a Union at the time that its contract at the project

commences shall continue it in effect with each said Union so long as the Contractor remains on the project. In the event any such Local Area Agreement expires, the Contractor shall abide by all of the terms of the expired Local Agreement until agreement is reached on a new Local Agreement, with any changes being subject to the provisions of this Agreement.

The Union agrees that there will be no strikes, work stoppages, sympathy actions, picketing, slowdowns or other disruptive activity affecting the Project by any Union involved in the negotiation of a Local Area Agreement nor shall there be any lockout on this Project affecting the Union during the course of such negotiations.

IN WITNESS WHEREOF, the parties have hereunto set their hands on the date of attestation shown below.

DULUTH BUILDING AND
CONSTRUCTION TRADES COUNCIL

By: _____

Its _____
(Printed Name/Title)

Date: _____

VENDOR

By: _____

Its _____
(Printed Name/Title)

Date: _____

CITY OF DULUTH

By:_____
Mayor

Attest:

_____
City Clerk

Date: _____

_____
City Auditor

Date: _____

_____
Assistant City Attorney

Date: _____

SCHEDULE "A"

A1 Asbestos Workers Local 49
A-2 Boilermakers Local 647
A-3 BAC Local 1 Chapter 3 Duluth & Iron Range
A-4 Carpenters Local 361
A-5 Cements Masons/Plasterers Local 633
A-6 Elevator Constructors Local 9
A-7 IBEW Local 242
A-8 Iron Workers Local 512
A-9 Laborers Local 1091
A-10 Millwrights & Machinery Erectors Local 1348
A-11 Operating Engineers Local 49
A-12 Painters & Allied Trades Local 106
A-13 Plumbers & Fitters Local 11
A-14 Roofers Local 96
A-15 Sheet Metal Workers Local 10
A-16 Sprinkler Fitters Local 669
A-17 Teamsters Local 346

Building Trades Affiliates
Contract Expirations

Heat & Frost Insulators Local 49	May 31, 2017
Boilermakers Local 647	December 31, 2016
Bricklayers Local 1	April 30, 2018
Carpenters Local 361	May 30, 2017
Cement Masons Local 633	April 30, 2017
Elevator Constructors Local 9	July 8, 2017
Glaziers Local 106	April 30, 2017
IBEW Local 242	May 31, 2019
Iron Workers Local 512	April 30, 2019
Laborers Local 1091	April 30, 2017
Operator Engineers Local 49 (Bldrs)	April 30, 2019
(Hwy Heavy)	April 30, 2017
Painters Local 106	April 30, 2017
Plumbers & Steamfitters Local 11	April 30, 2017
Roofers Local 96	June 30, 2016
Sheet Metal Local 10	April 30, 2019
Sprinkler Fitters Local 669	March 31, 2019
Teamsters Local 346	April 30, 2017

Updated 5/23/2016

Affiliated AFL-CIO

DULUTH BUILDING AND CONSTRUCTION TRADES COUNCIL

2002 LONDON ROAD | LABOR CENTER | DULUTH, MINN. 55812

Officers
Craig Olson
President
Darrell Godbout
Vice President
Dan Olson
Secretary
Jeff Daveau
Treasurer

Boilermakers #647
Bricklayers #1
Carpenters #361
Cement Masons #633
Elevator #9
IBEW #242
Insulators #49
Ironworkers #512
Laborers #1091
Millrights #1348
Operators #49
Painters #106
Pipefitters #11
Roofers #96
Sheetmetal #10
Sprinkleritters #669
Teamsters #346

ASBESTOS WORKERS LOCAL 49
Dave Cartwright
2002 London Road #210
Duluth, MN 55812
(218) 724-3223 / Fax# 724-1870
dave@insulatorslocal49.org

BOILERMAKERS LOCAL 647
Bill Polchow
1007 NW 4th Street, Ste C
Grand Rapids, MN 55744
(218) 326-2522 / Fax# SAME
bpolchow647@outlook.com

BAC LOCAL #1 CHAPTER 3 DULUTH & IRON RANGE
Stan (Ogie) Paczynski
2002 London Road #100
Duluth, MN 55812
(218) 724-8374 / Fax# 724-8341
spaczynski@bac1mn-nd.org

CARPENTERS LOCAL 361
Steve Risacher & Chris Hill
5238 Miller Trunk Hwy
Hermantown, MN 55811
(218) 724-3297 / Fax# 724-8536
srisacher@ncsrcc.org
chill@ncsrcc.org

CEMENT MASONS LOCAL 633
Michael Syversrud
2002 London Road #112
Duluth, MN 55812
(218) 724-2323 / Fax# 724-2472
mikes@local633.org

ELEVATOR CONSTRUCTORS LOCAL 9
Dave Aaserud
433 Little Canada Rd E
Little Canada, MN 55117
(651) 287-0817 / Fax# 287-0820
d.aaserud@local9.com

IBEW LOCAL 242
Don Smith
2002 London Road #111
Duluth, MN 55812
(218) 728-6895 / Fax# 728-1965
dsmithlcl242@unions-america.com

IRON WORKERS LOCAL 512
Darrell Godbout, ***Vice President***
3752 Midway Road
Hermantown, MN 55810
(218) 724-5073 / Fax# 724-1525
darrell@iron512.com

LABORERS LOCAL 1091
Dan Olson, ***Secretary***
2002 London Road #119
Duluth, MN 55812
(218) 728-5151 / Fax# 728-2431
laborers@local1091.com

MILLRIGHTS & MACHINERY ERECTORS LOCAL 1348
Wayne Nordin
307 N 1st Street
Virginia, MN 55792
(218) 741-6314 / Fax# 741-6017
wnordin@ncsrcc.org

OPERATING ENGINEERS LOCAL 49
Brent Pykkonen
2002 London Road #116
Duluth, MN 55812
(218) 724-3840 / Fax# 728-1441
pyke49@yahoo.com

PAINTERS LOCAL 106
Craig Olson, ***President***
2002 London Road #106
Duluth, MN 55812
(218) 724-6466 / Fax# 724-7359
president@duluthbuildingtrades.com

PLUMBERS & FITTERS LOCAL 11
Jeff Daveau, ***Treasurer***
4402 Airpark Boulevard
Duluth, MN 55811
(218) 727-2199 / Fax# 727-2298
jeff@ualocal11.com

ROOFERS LOCAL 96
Vance Anderson
1145 Villa Vista Circle
Cromwell MN 55726
(218) 644-1096 / Fax# SAME
valocal96@yahoo.com

SHEET METAL WORKERS LOCAL 10
Doug Christy
6279 Industrial Road
Saginaw, MN 55779
(218) 724-6873 / Fax# SAME
dchristy@smw10.org

SPRINKLER FITTERS LOCAL 669
James Westby
PO Box 398
Mabel, MN 55954
(507) 493-5671 / Fax# 493-5481
westby@mabeltel.coop

TEAMSTERS LOCAL 346
Rod Alstead
2802 West 1st Street
Duluth, MN 55806
(218) 628-1034 / Fax# 628-0246
teaml346@qwest.net

International Brotherhood of
BOILERMAKERS · IRON SHIP BUILDERS
9459 N.W. Highway 10, Suite 105
Ramsey, MN 55303-7280

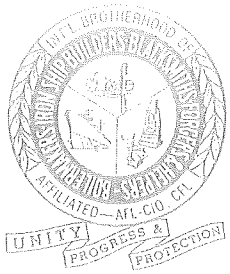

Local Lodge No. 647
BLACKSMITHS · FORGERS & HELPERS
Luke A. Voigt
Business Manager/Secretary Treasurer
763-712-9930 . Fax: 763-712-9935

December 1, 2015

TO WHOM IT MAY CONCERN:

The following wage package changes listed below become effective 01/01/2016 thru 12/31/2016 for Boilermakers Local Lodge #647. Per the Great Lakes Articles of Agreement for the year of 2016, there is a $1.40 increase to be allocated by the membership. The $1.40 has been allocated as follows: $1.00 will go to a wage increase, $.40 will go to an Annuity increase. Per Article 24.4, the 647 Development and Training Fund (D&T) will increase $.05 for a total contribution of $.51.

CHANGES AS OF:	January 1, 2016
Increase General Foreman	$ 1.00
Increase Foreman	1.00
Increase Journeyman	1.00
Increase Annuity	.40
Increase 647 D&T	.05
Increase Vacation Fund Deduction	.95
Increase Subsistence	5.00

Effective:	01/01/2016
General Foreman Wage	$ 39.65
Foreman Wage	37.65
Journeyman Wage	35.15
Pension Trust	14.14
Annuity Trust	4.40
Health & Welfare Fund	7.07
Retiree Welfare Plan	.50
Apprenticeship Fund	.40
MOST	.34
647 D&T	.51
Deductions (after tax)	
Vacation Trust	2.00
647 Political Action Fund	.05

All other benefits and deductions remain the same for the Great Lakes Articles of Agreement as listed further in this letter.

Subsistence will be paid under the terms and conditions of the Great Lakes Articles of Agreement. For the provisions of the agreement on subsistence, Addendum A of the agreement states effective 01/01/2016 thru 12/31/2016 the daily rate of Subsistence is $65.00 per day if a Boilermaker's permanent address is 50 miles from the jobsite.

Boilermaker-Blacksmith National Pension Trust ($14.14), National Annuity ($4.40), National Health & Welfare Fund ($7.07), Boilermakers Great Lakes Region Retiree Welfare Plan ($.50), Boilermakers 647 D&T Fund ($.51), Boilermakers 647 Political Action Fund ($.05 deducted after taxes), to be paid on hours PAID, not hours worked.

Vacation Trust ($2.00 deducted after taxes), Apprenticeship Fund ($.40) and MOST ($.34) are to be paid on hours WORKED.

647 Political Action Fund and 647 D&T Fund monies will be submitted to Local 647 on separate forms and will require separate checks for each fund.

Boilermakers receive time and one-half over the established workday of eight hours and all time worked on Saturdays. All time worked on Sundays and holidays are double time.

Effective November 1, 2011, Field Dues increased to 4.25% of the gross pay, which is remitted to Local 647.

An Emergency Work Addendum has been added to the Great Lakes Articles of Agreement which provides for time and one half rate of pay for unscheduled emergency outages. If you would like a copy of this addendum please contact Local 647.

This is the third and final year of the agreement.

If you have any questions please call me at 763-712-9930.

Very truly yours,

Luke A. Voigt
Business Manager/Secretary Treasurer
Boilermakers Local Lodge #647

LAV/vm
opeiu #12

Bricklayers and Allied Craftworkers

Local Union 1 Minnesota / North Dakota

312 Central Avenue, Suite 328
Minneapolis, Minnesota 55414

"Building For the Future"

TELEPHONE: 612/379-2966
FAX: 612/379-8754

MICHAEL J COOK
President/Secretary-Treasurer

To: All Associated General Contractors
Minnesota Masonry Contractors
Independent Contractors
Chapter #3
Duluth Area

May 6, 2016

Scope of the Agreement
This agreement shall cover all of the part of St. Louis County, south of a line between townships 54 and 55 (two miles north of Cotton), also the eastern half of Aitkin County on a line with the northeast boundary line of Mille Lacs County, also Carlton, Lake, Cook, Pine and Kanabec.

BRICKLAYERS AND ALLIED CRAFTWORKERS
LOCAL UNION 1 MINNESOTA / NORTH DAKOTA
DULUTH AREA – BRICKLAYERS, BLOCKLAYERS AND P.C.C.'S

This is to advise you that the new working agreement calls for a $1.90 increase per hour with rates retroactive to May 1, 2016. Please inform your bookkeeping department of the following rates.

The total wage rate effective May 1, 2016 for members of the Bricklayers and Allied Craftworkers will be as follows:

WAGES	HEALTH $BANK – RPP	HRA	IU & PPA PENSION	LOCAL PENSION	DUL ANN	DUL VAC	DUES	IMI	APPR	FCF	TOTAL
29.64	(6.96 + 1.10)	.88	(1.50 + .52)	7.15	3.85	2.00	1.27	.56	.30	.02	55.75

Base Rate:	$29.64
Vacation, Dues Check Off:	$3.27
Taxable Amount:	$32.91

FOREMAN RATE - The **NEW** Foreman rate shall be an additional **$3.50** above the scale.
REFRACTORY - The Refractory Base Wage rate shall be $31.14 with above fringe benefits.
VACATION PAY - Vacation Pay shall be pyramided in all overtime pay. Time and one-half = $3.00
Double-time =$4.00

Sincerely,
Michael J Cook

Michael J. Cook
President / Secretary - Treasurer
Bricklayers and Allied Craftworkers
Local Union 1Minnesota / North Dakota
8 – 2016

APPRENTICE WAGES

BASE WAGE	TAXABLE
0 - 1999 hours 65% - $19.27	$22.54*
2000 - 3999 hours 75% - $22.23	$22.50*
4000 - 5999 hours 85% - $25.19	$28.46*
6000 hours full wages & fringe benefits *	

Taxable wage - Includes Vacation and Dues

Bricklayers and Allied Craftworkers

Local Union 1 Minnesota / North Dakota

312 Central Avenue, Suite 328
Minneapolis, Minnesota 55414

"Building For the Future"

TELEPHONE: 612/379-2966
FAX: 612/379-8754

MICHAEL J. COOK
President/Secretary-Treasurer

To: All Associated General Contractors
Minnesota Tile Contractors
Independent Contractors
Chapter #3
Duluth Area

Scope of the Agreement
This agreement shall cover the counties of St. Louis, Koochiching, Itasca, Aitkin, Carlton, Lake, and Cook. The agreement shall also cover all of the part of Pine County north of County Road 30 and include the city of Sandstone.

April 29, 2016

BRICKLAYERS AND ALLIED CRAFTWORKERS
LOCAL UNION 1 MINNESOTA / NORTH DAKOTA

DULUTH AREA –TILE LAYERS

This is to advise you that the new working agreement calls for a $1.40 increase per hour on May 1, 2016. Please inform your bookkeeping department of the following rates.

The total wage rate effective May 1, 2016 for members of the Bricklayers and Allied Craftworkers will be as follows:

WAGES	HEALTH $BANK – RPP	HRA	IU & PPA PENSION	LOCAL PENSION	LOCAL ANNUITY	VAC.	DUES	IMI	APPR	FCF	TOTAL
23.32	(5.65 + 1.10)	1.21	(1.50 + .52)	7.15	4.72	.50	1.09	.47	.20	.02	47.45

Base Rate: $23.32
Vacation, Dues Check Off: $1.59
Taxable Amount: $24.91

Foreman shall receive an additional $1.00 above the scale.

APPRENTICESHIP WAGES

	BASE WAGE	TAXABLE
0 – 1999 hours	90% - $20.99	$22.58 *
2000 - 3999 hours	95% - $22.15	$23.74 *

4000 hours full wage & fringe benefits

* Taxable wage = Includes Dues*

Sincerely,

Michael J. Cook

Michael J. Cook
President / Secretary - Treasurer
Bricklayers and Allied Craftworkers
Local Union 1 Minnesota / North Dakota

46-2016

Bricklayers and Allied Craftworkers

Local Union 1 Minnesota / North Dakota

312 Central Avenue, Suite 328
Minneapolis, Minnesota 55414

"Building For the Future"

TELEPHONE: 612/379-2966
FAX: 612/379-8754

MICHAEL J. COOK
President/Secretary-Treasurer

To: All Associated General Contractors
Minnesota Tile Contractors
Independent Contractors
Chapter #3
Duluth Area

Scope of the Agreement
This agreement shall cover the counties of St. Louis, Koochiching, Itasca, Aitkin, Carlton, Lake, and Cook. The agreement shall also cover all of the part of Pine County north of County Road 30 and include the city of Sandstone.

April 29, 2016

BRICKLAYERS AND ALLIED CRAFTWORKERS
LOCAL UNION 1 MINNESOTA / NORTH DAKOTA
DULUTH AREA - TILE FINISHERS

This is to advise you that the new working agreement calls for a $1.40 increase per hour on May 1, 2016. Please inform your bookkeeping department of the following rates.

The total wage rate effective May 1, 2016 for members of the Bricklayers and Allied Craftworkers will be as follows:

WAGES	HEALTH $BANK - RPP	HRA	IU & PPA PENSION	LOCAL PENSION	LOCAL ANNUITY	VAC.	DUES	IMI	APPR	FCF	TOTAL
16.54	(5.65 + 1.10)	1.00	(1.50 + .52)	7.15	.54	.50	.87	.36	.20	.02	35.95

Base Rate:	$16.54
Vacation, Dues Check Off:	$1.37
Taxable Amount:	$17.91

APPRENTICESHIP WAGES

	BASE WAGE	TAXABLE
0 - 999 hours	70% - $11.58	$12.95*
1000 – 1999 hours	75% - $12.41	$13.78*
2000 -2999 hours	80% - $13.23	$14.60*
3000 - 3999 hours	85% - $14.07	$15.43*
4000 hours full wage & fringe benefits		

* Taxable wage = Includes Dues*

Sincerely,

Michael J. Cook

Michael J. Cook
President / Secretary - Treasurer
Bricklayers and Allied Craftworkers
Local Union 1 Minnesota / North Dakota

47-2016

Northern Minnesota

Local 361

Commercial Carpenter Wage Rates

Effective May 1, 2016

Classification		Percent (%)	Gross Wages	Deductions: Savings	Deductions: Dues	Fringe Benefits: Health	Fringe Benefits: DB Pension	Fringe Benefits: DC Pension	Fringe Benefits: Apprentice/ Education	Fringe Benefits: Fair Contracting	Total Package
Commercial Foreman (+2.00 Above JP)		100%	$31.97	-$1.30	-$1.20	$6.81	$6.60	$3.00	$0.55	$0.02	$48.95
Commercial Journeyperson		100%	$29.97	-$1.30	-$1.20	$6.81	$6.60	$3.00	$0.55	$0.02	$46.95
Apprentice	6125-7000	97%	$29.07	-$1.30	-$0.90	$6.81	$6.60	$3.00	$0.55	$0.02	$46.05
	5250-6125	93%	$27.87	-$1.30	-$0.90	$6.81	$6.60	$3.00	$0.55	$0.02	$44.85
	4375-5250	88%	$26.37	-$1.30	-$0.90	$6.81	$6.60	$3.00	$0.55	$0.02	$43.35
	3500-4375	83%	$24.88	-$1.30	-$0.90	$6.81	$6.60	$3.00	$0.55	$0.02	$41.86
	2625-3500	78%	$23.38	-$1.30	-$0.90	$6.81	$6.60	$3.00	$0.55	$0.02	$40.36
	1750-2625	73%	$21.88	-$1.30	-$0.90	$6.81	$6.60	$3.00	$0.55	$0.02	$38.86
	875-1750	68%	$20.38	-$1.30	-$0.90	$6.81	$6.60	$3.00	$0.55	$0.02	$37.36
	0-875	63%	$18.88	-$1.30	-$0.90	$6.81	$6.60	$3.00	$0.55	$0.02	$35.86

Consisting of Carlton, Cook, Pine, and portions of Lake and St. Louis Counties in Minnesota and Douglas and Western Bayfield Counties in Wisconsin.

CEMENT MASONS, PLASTERERS AND SHOPHANDS
Local No. 633

of Minnesota, North Dakota, and NW Wisconsin · AFL-CIO

312 Central Avenue · Room 376 · Minneapolis, Minnesota 55414

Phone (612)379-1558 · Fax (612)379-1559

GREG MASSEY
Financial Secretary Business Manager

DAVE SCHUTTA
President

JOSEPH DeRASMI
Business Agent

BRIAN GULLICKSON
Business Agent

GREG JOHNSON
Business Agent

JEROME JOHNSON
Business Agent

MICHAEL KRAHN
Business Agen

DARRELL LENDE
Business Agent

MICHAEL SYVERSRUD
Business Agent

THOMAS REGER
Apprentice Coordinator

TO: ALL DULUTH AREA CONTRACTORS

ATTN: PAYROLL DEPT

RE: 2016 WAGE RATES - **BUILDERS** DIVISION

This Agreement shall govern work done in the areas defined as follows: All of the following counties: Aitkin, Carlton, Cook, Lake and that part of Pine County north of the northern boundaries of Dell Grove, Sandstone and Danforth townships, and that part of St. Louis County south of Co Rd 967 which is two miles north of cotton on Hwy #53, as well as the following counties in Wisconsin: Douglas, Bayfield, Washburn, Sawyer and Price.

EFFECTIVE MAY 1, 2016

BASIC WAGE*	HEALTH & WELFARE	HRA	PENSION	SAVINGS	TRAINING	TOTAL
30.86	7.48	1.25	7.94	(5.27)	.46	47.99

*The Basic Wage before the deduction of savings is the straight time wage used in determining overtime. (EXAMPLE: 1.5 X $30.86 = $46.29 TAXED, THEN MINUS $5.27 FOR SAVINGS EACH HOUR) After all taxes are deducted from the Basic Wage rate, $5.27 per hour for each hour worked shall be deducted and applied to the Minnesota Cement Masons Savings Plan.

Foreman: $2.00 above basic wage

APPRENTICE RATES:

UP TO 1000HRS	70%	21.60
1001-2000 HRS	75%	23.15
2001-3000 HRS	80%	24.69
3001-4000 HRS	85%	26.23
4001-5000 HRS	90%	27.77
5001-6000 HRS	95%	29.32

CEMENT MASONS, PLASTERERS AND SHOPHANDS
Local No. 633
of Minnesota, North Dakota, and NW Wisconsin · AFL-CIO
312 Central Avenue · Room 376 · Minneapolis, Minnesota 55414
Phone (612)379-1558 · Fax (612)379-1559

GREG MASSEY
Financial Secretary Business Manager

DAVE SCHUTTA
President

JOSEPH DeRASMI
Business Agent

BRIAN GULLICKSON
Business Agent

GREG JOHNSON
Business Agent

JEROME JOHNSON
Business Agent

MICHAEL KRAHN
Business Agen

DARRELL LENDE
Business Agent

MICHAEL SYVERSRUD
Business Agent

THOMAS REGER
Apprentice Coordinator

TO: ALL DULUTH AREA CONTRACTORS

ATTN: PAYROLL DEPT

RE: 2016 WAGE RATES - **HIGHWAY/HEAVY** DIVISION

This Agreement shall govern work done in the areas defined as follows: All of the following counties: Aitkin, Carlton, Cook, Lake and that part of Pine County north of T.24N, and that part of St. Louis County south of T.55N, as well as the following counties in Wisconsin: Ashland, Douglas, Bayfield, Burnett, Iron, Washburn, Sawyer and Price.

EFFECTIVE MAY 1, 2016

BASIC WAGE*	HEALTH & WELFARE	HRA	PENSION	SAVINGS	TRAINING	TOTAL
33.95	7.48	1.75	7.94	(5.67)	.46	51.58

*The Basic Wage before the deduction of savings is the straight time wage used in determining overtime. (EXAMPLE: 1.5 X $33.95 = $50.93, TAXED, THEN MINUS $5.67 FOR SAVINGS EACH HOUR) After all taxes are deducted from the Basic Wages, $5.67 per hour for each hour worked shall be deducted and applied to the Minnesota Cement Masons Savings Plan.

Foreman: $1.50 above basic wage

APPRENTICE RATES:

UP TO 1000HRS	70%	23.77
1001-2000 HRS	75%	25.46
2001-3000 HRS	80%	27.16
3001-4000 HRS	85%	28.86
4001-5000 HRS	90%	30.56
5001-6000 HRS	95%	32.25

CEMENT MASONS, PLASTERERS AND SHOPHANDS
Local No. 633
of Minnesota, North Dakota, and NW Wisconsin · AFL-CIO
312 Central Avenue · Room 376 · Minneapolis, Minnesota 55414
Phone (612)379-1558 · Fax (612)379-1559

GREG MASSEY
Financial Secretary Business Manager

DAVE SCHUTTA
President

JOSEPH DeRASMI
Business Agent

BRIAN GULLICKSON
Business Agent

GREG JOHNSON
Business Agent

JEROME JOHNSON
Business Agent

MICHAEL KRAHN
Business Agen

DARRELL LENDE
Business Agent

MICHAEL SYVERSRUD
Business Agent

THOMAS REGER
Apprentice Coordinator

TO: ALL NORTHERN MINNESOTA & NORTHWESTERN WISCONSIN **PLASTERING** CONTRACTORS

ATTN: PAYROLL DEPT, 2016 WAGE RATES

This Agreement shall govern work done in the areas defined as follows: All of the following counties: Aitkin, Carlton, Cook, Itasca, Lake, St. Louis, and that part of Pine County north of T.24N, as well as the following counties in Wisconsin: Ashland, Bayfield, Douglas, Iron, Sawyer, Washburn, Burnett, and Price.

EFFECTIVE MAY 1, 2016

BASIC WAGE*	HEALTH & WELFARE	HRA	PENSION	SAVINGS*	TRAINING	TOTAL
31.49	7.48	2.00	7.94	(3.60)	.46	49.37

*The Basic Wage before the deduction of savings is the straight time wage used in determining overtime. (EXAMPLE: 1.5 X $31.49 = $47.24 TAXED, THEN MINUS $3.60 FOR SAVINGS EACH HOUR). After all taxes are deducted from the Basic Wage rate, $3.60 per hour for each hour worked shall be deducted and applied to the Minnesota Cement Masons Savings Plan.

Foreman: $1.50 above basic wage

APPRENTICE RATES:

UP TO 1000HRS	70%	22.04
1001-2000 HRS	75%	23.62
2001-3000 HRS	80%	25.19
3001-4000 HRS	85%	26.77
4001-5000 HRS	90%	28.34
5001-6000 HRS	95%	29.92

INTERNATIONAL UNION OF ELEVATOR CONSTRUCTORS

LOCAL UNION NO. 9
433 Little Canada Road E.
Little Canada, MN 55117

AFFILIATED WITH THE AFL-CIO
Phone: (651) 287-0817
Fax: (651) 287-0820

Wage & Fringe Benefits: January 1, 2015

To: All Employers doing Business within the Jurisdiction of IUEC Local 9
Subject: Wage rates effective January 1, 2015 – IUEC Local 9
Minnesota, North Dakota and Western Wisconsin

In accordance with the provisions of Article V of the current labor agreement (2012-2017) between all signatory employers and the International Union of Elevator Constructors, the following rates shall be effective on January 1, 2015:

Mechanic in Charge	(112.5%)	$50.55
Mechanic	(100.0%)	$44.93
4th Year Apprentice	(80.0%)	$35.94
3rd Year Apprentice	(70.0%)	$31.45
2nd Year Apprentice	(65.0%)	$29.20
1st Year Apprentice	(55.0%)	$24.71
Probationary Apprentice	(50.0%)	$22.47
Helper	(70.0%)	$31.45

The company will make fringe benefit contributions per hour worked in accordance with the following schedule:

Health Benefit Plan	$13.575
Pension	$ 8.46
Annuity	$ 5.75
Education	$ 0.60
Elevator Ind. Work Preservation Fund	$ 0.30
TOTAL	$28.685

Vacation: 6% Hourly pay under 5 years
8% Hourly pay over 5 years

Local 106 Glaziers Wage Rates
Effective May 4, 2015

Journeyperson Wage Rates:

	Base	Health & Welfare	Pension	Annuity	Industry & Appr	STAR	DC82/FCF	**Total**	Vac *	Check-off Dues**
Glaziers	$29.67	$6.85	$5.67	$3.65	$0.56	$ 0.10	$0.01	$46.51	$2.30	$1.83
Auto Glass	$23.74	$6.85	$5.67	$3.65	$0.56	$ 0.10	$0.01	$40.58	$2.30	$1.62

Apprentices Indentured BEFORE May 1, 2014:

Hours	**%**	Base	Health & Welfare	Pension	Annuity	Industry & Appr	STAR	DC82/FCF	**Total**	Vac *	Check-off Dues**
0-1000	50	$14.84	$6.85	$5.67	$3.65	$0.56	$ 0.10	$0.01	$31.68	$1.15	$1.31
1001-2000	55	$16.32	$6.85	$5.67	$3.65	$0.56	$ 0.10	$0.01	$33.16	$1.27	$1.36
2001-3000	60	$17.81	$6.85	$5.67	$3.65	$0.56	$ 0.10	$0.01	$34.65	$1.38	$1.42
3001-4000	70	$20.77	$6.85	$5.67	$3.65	$0.56	$ 0.10	$0.01	$37.61	$1.61	$1.52
4001-5000	80	$23.74	$6.85	$5.67	$3.65	$0.56	$ 0.10	$0.01	$40.58	$1.84	$1.62
5001-6000	90	$26.71	$6.85	$5.67	$3.65	$0.56	$ 0.10	$0.01	$43.55	$2.07	$1.73

Apprentices Indentured on or AFTER May 1, 2014:

Hours	**%**	Base	Health & Welfare	Pension	Annuity	Industry & Appr	STAR	DC82/FCF	**Total**	Vac *	Check-off Dues**
0-1000	50	$14.84	$6.85	$5.67	$1.83	$0.56	$ 0.10	$0.01	$29.86	$1.15	$1.25
1001-2000	55	$16.32	$6.85	$5.67	$2.01	$0.56	$ 0.10	$0.01	$31.52	$1.27	$1.31
2001-3000	60	$17.81	$6.85	$5.67	$2.19	$0.56	$ 0.10	$0.01	$33.19	$1.38	$1.37
3001-4000	70	$20.77	$6.85	$5.67	$2.56	$0.56	$ 0.10	$0.01	$36.52	$1.61	$1.48
4001-5000	80	$23.74	$6.85	$5.67	$2.92	$0.56	$ 0.10	$0.01	$39.85	$1.84	$1.60
5001-6000	90	$26.71	$6.85	$5.67	$3.29	$0.56	$ 0.10	$0.01	$43.19	$2.07	$1.72

*The Vacation Contribution is included in the taxable wage listed above, then deducted and remitted along with your Health & Welfare Contribution.

Revised 5/4/15

LOCAL UNION #242

Effective Dates	05/31/15			05/29/16			06/04/17			06/03/18		
JW Rate	**$33.90**			**$35.01**			**$35.92**			**$36.80**		
Foreman	**12.5%**			**12.5%**			**13.0%**			**13.0%**		
General Foreman	**22.5%**			**22.5%**			**23.0%**			**23.0%**		
NEBF	3.00%	$	1.02	3.00%	$	1.05	3.00%	$	1.08	3.00%	$	1.10
Vacation	11.00%	$	3.73	11.00%	$	3.85	11.00%	$	3.95	11.00%	$	4.05
H & W	27.64%	$	9.37	26.76%	$	9.37	26.75%	$	9.61	26.77%	$	9.85
Local Pension	13.55%	$	4.59	13.55%	$	4.74	13.55%	$	4.87	13.55%	$	4.99
Annuity	16.00%	$	5.42	16.00%	$	5.60	16.00%	$	5.75	16.00%	$	5.89
****Total Package**	**$58.05**			**$59.65**			**$61.20**			**$62.70**		
LLMCC Employee .02	$58.03			$59.63			$61.18			$62.68		
Total Package %	**71.19%**			**70.31%**			**70.30%**			**70.32%**		

****These total packages do not include Apprenticeship (1%), NECA Service Charges (1.25%), Admin. Maint. Fund (.006%/hr.), NLMCC (.01 cent/hr.), or LLMCC (.04 cents/hr.).**

Apprenticeship	1% / .34	1% / .35	1% / .36	1% / .37
Service Charge	1.25% / .42	1.25% / .44	1.25% / .45	1.25% / .46
NLMCC	0.01	0.01	0.01	0.01
Local LMCC	0.04	0.04	0.04	0.04
Admin Maint Fund	0.20	0.21	0.22	0.22
	1.01	**1.05**	**1.08**	**1.10**

401k deduction - $1.00, $3,00 & $5.00 per hour (at employees discretion)

Subsistance for all jobs outside of 35 mile radius of Lake Ave & Superior Street in Duluth - $15.00
Subsistance for all jobs outside of 70 mile radius of Lake Ave & Superior Street in Duluth - $50.00

DULUTH APPRENTICE WAGE RATE INFORMATION

6th	6,500 - 8,000	85%	Full Benefits - 5th year
5th	5,000 - 6,500	75%	Full Benefits - 4th year
4th	3,500 - 5,000	65%	Full Benefits - 3rd year
3rd	2,000 - 3,500	55%	Full Benefits - 2nd year
2nd	1,000 - 2,000	50%	H & W / NEBF - 1st year

INTERNATIONAL ASSOCIATION OF

Heat & Frost Insulators & Allied Workers

Local 49

2002 London Road
Duluth, MN 55812

Tel: 218-724-3223
Fax: 218-724-1870
Cell: 218-590-0374

May 28, 2016

To whom it may concern,

The allocation of the wage increase effective June 1st 2016 is as follows:

	Mechanic	4th Year	3rd Year	2nd Year	1st Year
Base Wage	$28.77	$21.83	$19.13	$16.49	$13.79
Savings	$8.00	$6.00	$4.76	$3.50	$2.26
Union Dues	$3.54	$2.83	$2.48	$2.12	$1.77
Health & Welfare	$7.20	$7.20	$7.20	$7.20	$7.20
Pension	$9.00	$7.20	$5.76	$4.30	$2.86
Local Training	$0.50	$0.50	$0.50	$0.50	$0.50
Nat'l Training	$0.05	$0.05	$0.05	$0.05	$0.05
Industry Fund	$0.15	$0.15	$0.15	$0.15	$0.15
LMCT	$0.05	$0.05	$0.05	$0.05	$0.05
Total	**$57.26**	**$45.81**	**$40.08**	**$34.36**	**$28.63**
Total Taxable	*$40.31*	*$30.66*	*$26.37*	*$22.11*	*$17.82*

Please feel free to call the Local office with questions or concerns.

Sincerely,

David Cartwright
Business Manager

Affiliated with the AFL-CIO, Building and Construction Trades Department, Metal Trades Department and Canadian Labour Congress

PRINTED IN U.S.A.

IRON WORKERS LOCAL UNION NO. 512 REGIONAL WAGE/FRINGE SCHEDULE

Region A

Effective June 5, 2016

Base Wage Rate	Defined Benefit Pension	Defined Contribution Pension	Health & Welfare	Apprenticeship & Training Fund	IMPACT Fund	Fair Contracting Foundation	Total Package	Voluntary CAF
$36.00	$9.75	$6.00	$8.20	$0.95	$0.27	$0.02	$61.19	$0.04

$54.00	Journeyman time and one-half rate
$72.00	Journeyman double time rate

Leadman (two employees or less)	$1.00	per hour above Base Wage Rate.
Foreman (three employees or more)	$2.50	per hour above Base Wage Rate.
General Foreman	$4.00	per hour above Base Wage Rate.

Savings Plan Deduction ($3.25 per hour)
The Employer is required to deduct $3.25 per hour worked from the Employee's after-tax wages as the Savings Plan Deduction; calculated on an hours-worked basis and does not pyramid with overtime rates of pay.

Working Dues Check-Off Deduction
The Employer is required deduct from the Employee's after-tax wages, the amount equal to **5%** of the Employee's gross wages as a working dues check-off deduction. This deduction shall not apply to per diem, subsistence, mileage or bonus payments made to the employee.

Organizing Dues Check-Off Deduction
The Employer is required to deduct $0.10 per hour worked from the Employee's after-tax wages as an organizing dues check-off deduction, calculated on an hours-worked basis and does not pyramid with overtime rates of pay.

Fair Contracting Foundation (FCF)
Included in the Total Package amount is a contribution of $0.02 per hour worked, effective in all Regions of the Union. This contribution is to be reported as a separate line item and remitted to Twin City Iron Workers Fringe Benefit Funds with the other contributions and will be forwarded to FCF appropriately.

****Contract Administration Fund (C.A.F.)**
Not included in the Total Package amount is a voluntary Employer contribution of $0.04 per hour worked for the Contract Administration Fund.

When and Where to Send Contributions and Deductions
All fringe benefit fund contributions and payroll deductions are due no later than the 20th day of the month following the month when the hours were worked and should be remitted to:

Twin City Iron Workers Fringe Benefit Funds
Wilson-McShane Corporation
3001 Metro Drive – Suite 500
Bloomington, MN 55425-1412

The Local 512 Collective Bargaining Agreement includes provisions for varying subsistence rates on projects, depending on the project location. For more specific information, please call the Local Union Main Office at (651)489-1488 or 1-(866)489-1488 (toll free).

IRON WORKERS LOCAL UNION NO. 512 REGIONAL WAGE/FRINGE SCHEDULE

Region B

Effective June 5, 2016

Base Wage Rate	Defined Benefit Pension	Defined Contribution Pension	Health & Welfare	Apprenticeship & Training Fund	IMPACT Fund	Fair Contracting Foundation	Total Package	Voluntary CAF
$31.54	$9.75	$6.00	$8.20	$0.95	$0.27	$0.02	$56.73	$0.04

$47.31	Journeyman time and one-half rate
$63.08	Journeyman double time rate

Leadman (two employees or less)	$1.00	per hour above Base Wage Rate.
Foreman (six employees or more)	$2.50	per hour above Base Wage Rate.
General Foreman	$4.00	per hour above Base Wage Rate.

Savings Plan Deduction ($3.25 per hour)
The Employer is required to deduct $3.25 per hour worked from the Employee's after-tax wages as the Savings Plan Deduction; calculated on an hours-worked basis and does not pyramid with overtime rates of pay.

Working Dues Check-Off Deduction
The Employer is required deduct from the Employee's after-tax wages, the amount equal to **5%** of the Employee's gross wages as a working dues check-off deduction. This deduction shall not apply to per diem, subsistence, mileage or bonus payments made to the employee.

Organizing Dues Check-Off Deduction
The Employer is required to deduct $0.10 per hour worked from the Employee's after-tax wages as an organizing dues check-off deduction, calculated on an hours-worked basis and does not pyramid with overtime rates of pay.

Fair Contracting Foundation (FCF)
Included in the Total Package amount is a contribution of $0.02 per hour worked, effective in all Regions of the Union. This contribution is to be reported as a separate line item and remitted to Twin City Iron Workers Fringe Benefit Funds with the other contributions and will be forwarded to FCF appropriately.

****Contract Administration Fund (C.A.F.)**
Not included in the Total Package amount is a voluntary Employer contribution of $0.04 per hour worked for the Contract Administration Fund.

When and Where to Send Contributions and Deductions
All fringe benefit fund contributions and payroll deductions are due no later than the 20th day of the month following the month when the hours were worked and should be remitted to:

Twin City Iron Workers Fringe Benefit Funds
Wilson-McShane Corporation
3001 Metro Drive – Suite 500
Bloomington, MN 55425-1412

The Local 512 Collective Bargaining Agreement includes provisions for varying subsistence rates on projects, depending on the project location. For more specific information, please call the Local Union Main Office at (651)489-1488 or 1-(866)489-1488 (toll free).

IRON WORKERS LOCAL UNION NO. 512 REGIONAL WAGE/FRINGE SCHEDULE

Region C

Effective June 5, 2016

Base Wage Rate	Defined Benefit Pension	Defined Contribution Pension	Health & Welfare	Apprenticeship & Training Fund	IMPACT Fund	Fair Contracting Foundation	Total Package	NDCC
$30.70	$9.75	$6.00	$8.20	$0.95	$0.27	$0.02	$55.89	$0.10

$46.05 Journeyman time and one-half rate
$61.40 Journeyman double time rate

Leadman (two employees or less)	$1.00	per hour above Base Wage Rate.
Foreman (three employees or more)	$2.50	per hour above Base Wage Rate.
General Foreman	$4.00	per hour above Base Wage Rate.

Savings Plan Deduction ($2.50 per hour)
The Employer is required to deduct $2.50 per hour worked from the Employee's after-tax wages as the Savings Plan Deduction; calculated on an hours-worked basis and does not pyramid with overtime rates of pay.

Working Dues Check-Off Deduction
The Employer is required deduct from the Employee's after-tax wages, the amount equal to **5%** of the Employee's gross wages as a working dues check-off deduction. This deduction shall not apply to per diem, subsistence, mileage or bonus payments made to the employee.

Organizing Dues Check-Off Deduction
The Employer is required to deduct $0.10 per hour worked from the Employee's after-tax wages as an organizing dues check-off deduction, calculated on an hours-worked basis and does not pyramid with overtime

Fair Contracting Foundation (FCF)
Included in the Total Package amount is a contribution of $0.02 per hour worked, effective in all Regions of the Union. This contribution is to be reported as a separate line item and remitted to Twin City Iron Workers Fringe Benefit Funds with the other contributions and will be forwarded to FCF appropriately.

****North Dakota Construction Council (NDCC**
The Employer agrees to contribute ten cents ($0.10) per hour worked in addition to the Total Package amounts set forth in this Agreement, for all bargaining unit work performed on sites covered by the North Dakota Construction Council (NDCC) and payable to the NDCC in accordance with the terms and conditions contained in the July 1, 2010 Letter of Understanding Relating to the North Dakota Construction Council (NDCC) between the parties to this Agreement.

When and Where to Send Contributions and Deductions
All fringe benefit fund contributions and payroll deductions are due no later than the 20th day of the month following the month when the hours were worked and should be remitted to:

Twin City Iron Workers Fringe Benefit Funds
Wilson-McShane Corporation
3001 Metro Drive – Suite 500
Bloomington, MN 55425-1412

The Local 512 Collective Bargaining Agreement includes provisions for varying subsistence rates on projects, depending on the project location. For more specific information, please call the Local Union Main Office at (651)489-1488 or 1-(866)489-1488 (toll free).

BUILDING WAGE RATES

Duluth/Cloquet Local #1091

Effective May 1, 2015:

Class	(Taxable) Wages	(Taxable) Vacation	H & W	Pension	Trng/Appr	LECET	SAFE		Total
1	$ 23.54	$ 2.10	$ 7.55	$ 6.40	$ 0.22	$ 0.08	$ 0.15	.....	$ 40.04
2	$ 23.64	$ 2.10	$ 7.55	$ 6.40	$ 0.22	$ 0.08	$ 0.15	.....	$ 40.14
3	$ 23.94	$ 2.10	$ 7.55	$ 6.40	$ 0.22	$ 0.08	$ 0.15	.....	$ 40.44
4	$ 24.24	$ 2.10	$ 7.55	$ 6.40	$ 0.22	$ 0.08	$ 0.15	.....	$ 40.74
5	$ 21.19	$ 2.10	$ 7.55	$ 6.40	$ 0.22	$ 0.08	$ 0.15	.....	$ 37.69

Example: Apprentice at 80% of Class 1 ONLY

Class 1	$ 18.83	$ 2.10	$ 7.55	$ 6.40	$ 0.22	$ 0.08	$ 0.15	.....	$ 35.33

Foreman/Leadman $1.50 above highest classification employed in.

Effective May 1, 2016 - $1.25 increase per hour

*** Vacation is a taxable wage and shall be paid for all hours worked and at 1 1/2 or 2 times the hourly rate when overtime is worked.

"All" Fringes are to be sent to :

Minnesota Laborers' Fringe Benefits Fund
P. O. Box 124
Minneapolis, MN 55440-0124
(651) 256-1800

HIGHWAY HEAVY WAGE RATES

District 2A - Duluth Local #1091

Effective May 1, 2015:

Class	(Taxable) Wages	(Taxable) Vacation	H & W	Pension	Trng/Appr	LECET	FCF		Total
1	$ 28.11	$ 2.30	$ 7.55	$ 6.50	$ 0.22	$ 0.08	$ 0.02	.....	$ 44.78
2	$ 28.31	$ 2.30	$ 7.55	$ 6.50	$ 0.22	$ 0.08	$ 0.02	.....	$ 44.98
3	$ 28.46	$ 2.30	$ 7.55	$ 6.50	$ 0.22	$ 0.08	$ 0.02	.....	$ 45.13
4	$ 28.56	$ 2.30	$ 7.55	$ 6.50	$ 0.22	$ 0.08	$ 0.02	.....	$ 45.23
5	$ 28.81	$ 2.30	$ 7.55	$ 6.50	$ 0.22	$ 0.08	$ 0.02	.....	$ 45.48
6	$ 30.61	$ 2.30	$ 7.55	$ 6.50	$ 0.22	$ 0.08	$ 0.02	.....	$ 47.28
7	$ 24.56	$ 2.30	$ 7.55	$ 6.25	$ 0.22	$ 0.08	$ 0.02	.....	$ 40.98

Increase May 1, 2016: $1.57 Allocation of increase TBD

Example: Apprentice at 80% of Class 1 ONLY

Class 1	$ 22.49	$ 2.30	$ 7.55	$ 6.50	$ 0.22	$ 0.08	$ 0.02	.....	$ 39.16

Pipelayer, Laser Beam (sewer, water, gas) Classification 6 rate.
Foreman/Leadman $1.50 above highest classification employed in.
General Foreman $2.25 above Foreman scale (appointed at employers discretion).

*** Vacation is a taxable fringe and part of the gross wage, it shall be paid for all hours worked and at 1 1/2 or 2 times the hourly rate when overtime is worked

"All" Fringes are to be sent to :

Minnesota Laborers' Fringe Benefits Fund
P. O. Box 124
Minneapolis, MN 55440-0124
(651) 256-1800

NORTH CENTRAL STATES Regional Council of CARPENTERS

LOCAL 1348 MILLWRIGHT AGREEMENT

NORTHERN MINNESOTA

MILLWRIGHTS & MACHINE ERECTOR WAGE RATES

Effective May 3, 2015

Classification		Percent (%)	Gross Wages	Deductions: Savings	Deductions: Dues	Fringe Benefits: Health	Fringe Benefits: DB Pension	Fringe Benefits: DC Pension	Fringe Benefits: Apprentice/ Education	Fringe Benefits: Industry Promo Fund	Total Package
General Foreman	F + $1.75	100%	$36.57	-$3.50	$1.46	$6.33	$5.90	$1.90	$0.60	$0.05	$51.35
Foreman	JP + $2.25	100%	$34.82	-$3.50	$1.39	$6.33	$5.90	$1.90	$0.60	$0.05	$49.60
Journeyperson		100%	$32.57	-$3.50	$1.30	$6.33	$5.90	$1.90	$0.60	$0.05	$47.35
Apprentice	6001-7000	95%	$30.94	-$3.50	$1.24	$6.33	$5.90	$1.90	$0.60	$0.05	$45.72
	5001-6000	90%	$29.31	-$3.50	$1.17	$6.33	$5.90	$1.90	$0.60	$0.05	$44.09
	4001-5000	85%	$27.68	-$3.50	$1.11	$6.33	$5.90	$1.90	$0.60	$0.05	$42.46
	3001-4000	80%	$26.06	-$3.50	$1.04	$6.33	$5.90	$1.90	$0.60	$0.05	$40.84
	2001-3000	75%	$24.43	-$3.50	$0.98	$6.33	$5.90	$1.90	$0.60	$0.05	$39.21
	1001-2000	70%	$22.80	-$3.50	$0.91	$6.33	$5.90	$1.90	$0.60	$0.05	$37.58
	0 - 1000	65%	$21.17	-$3.50	$0.85	$6.33	$5.90	$1.90	$0.60	$0.05	$35.95

Covering the following Counties in the State of Minnesota, Aitkin, Becker, Beltrami, Carlton, Cass, Clearwater, Cook, Lake, Crow Wing, Hubbard, Itasca, Kittson, Koochiching, Lake of the Woods, Manomen, Marshall, Norman, Otter Tail, Pennington, Red Lake , Roseau, St. Louis, Wadena, Wilkin and that part of Clay County outside of a 5 mile radius of Moorhead and that part of Polk County outside of a 5 mile radius of East Grand Forks. In Wisconsin the County of Douglas and that portion of Bayfield County west of Highway 63, and west of a line drawn between Drummond and Herbster and the Lake Superior shore, including the cities of Drummond and Herbster.

May 1, 2016 Increase: $1.75 Allocation TBD **May 7, 2017 Increase: $1.85 Allocation TBD**

INTERNATIONAL UNION OF OPERATING ENGINEERS, LOCAL No. 49
FOR THE:

HIGHWAY AND HEAVY WAGES EFFECTIVE MAY 1, 2015

EASTERN METROPOLITAN ZONE-(ZONE 1) -*See Wage District Map-*

Group	Wages	1 ½% of Gross Wages Excluding Fringes	H/W	HRA	Pension	Appren.	Totals	FCF $.02	"Voluntary" **NOT** Incl. in total Pkg IPF $.04
1	$34.78	**	$8.70	$1.00	$7.70	$.50	$52.68	$.02	$.04
2	33.78	**	8.70	1.00	7.70	.50	51.68	.02	.04
3	33.23	**	8.70	1.00	7.70	.50	51.13	.02	.04
4	32.93	**	8.70	1.00	7.70	.50	50.83	.02	.04
5	29.89	**	8.70	1.00	7.70	.50	47.79	.02	.04
6	28.68	**	8.70	1.00	7.70	.50	46.58	.02	.04

REMAINDER OF EASTERN ZONE-(ZONE 2) -*See Wage District Map-*

Group	Wages	1 ½% of Gross Wages Excluding Fringes	H/W	HRA	Pension	Appren.	Totals	FCF $.02	"Voluntary" **NOT** Incl. in total Pkg IPF $.04
1	$32.12	**	$8.70	$1.00	$7.70	$.50	$50.02	$.02	$.04
2	31.12	**	8.70	1.00	7.70	.50	49.02	.02	.04
3	30.67	**	8.70	1.00	7.70	.50	48.57	.02	.04
4	30.37	**	8.70	1.00	7.70	.50	48.27	.02	.04
5	27.80	**	8.70	1.00	7.70	.50	45.70	.02	.04
6	26.93	**	8.70	1.00	7.70	.50	44.83	.02	.04

WESTERN ZONE-(ZONE 3) -*See Wage District Map-*

Group	Wages	1 ½% of Gross Wages Excluding Fringes	H/W	HRA	Pension	Appren.	Totals	FCF $.02	"Voluntary" **NOT** Incl. in total Pkg IPF $.04
1	$26.85	**	$8.70	$1.00	$7.70	$.50	$44.75	$.02	$.04
2	25.85	**	8.70	1.00	7.70	.50	43.75	.02	.04
3	24.92	**	8.70	1.00	7.70	.50	42.82	.02	.04
4	24.61	**	8.70	1.00	7.70	.50	42.51	.02	.04
5	22.90	**	8.70	1.00	7.70	.50	40.80	.02	.04
6	22.30	**	8.70	1.00	7.70	.50	40.20	.02	.04

INTERNATIONAL UNION OF OPERATING ENGINEERS, LOCAL NO. 49
RATES FOR THE:

BUILDERS AGREEMENT – MINNESOTA

WAGES EFFECTIVE MAY 1, 2015 - ZONE 1

Group	Wages	1 ½% of Gross Wages Excluding Fringes	H&W	HRA	Pension	Appren-ticeship Training	Total	FCF $.02***	"Voluntary" **NOT** Included In Total Pkg C.A.F. $.04**
1	$37.74	*	$8.70	$.25	$7.70	$.50	$54.89	$.02	$.04
2	$37.40	*	$8.70	$.25	$7.70	$.50	$54.55	$.02	$.04
3	$35.99	*	$8.70	$.25	$7.70	$.50	$53.14	$.02	$.04
4	$35.65	*	$8.70	$.25	$7.70	$.50	$52.80	$.02	$.04
5	$35.48	*	$8.70	$.25	$7.70	$.50	$52.63	$.02	$.04
6	$33.97	*	$8.70	$.25	$7.70	$.50	$51.12	$.02	$.04
7	$32.85	*	$8.70	$.25	$7.70	$.50	$50.00	$.02	$.04
8	$30.84	*	$8.70	$.25	$7.70	$.50	$47.99	$.02	$.04

WAGES EFFECTIVE MAY 1, 2015 - ZONE 2

Group	Wages	1 ½% of Gross Wages Excluding Fringes	H&W	HRA	Pension	Appren-ticeship Training	Total	FCF $.02***	"Voluntary" **NOT** Included In Total Pkg C.A.F. $.04**
1	$35.85	*	$8.70	$.25	$7.70	$.50	$53.00	$.02	$.04
2	$35.53	*	$8.70	$.25	$7.70	$.50	$52.68	$.02	$.04
3	$34.20	*	$8.70	$.25	$7.70	$.50	$51.35	$.02	$.04
4	$33.88	*	$8.70	$.25	$7.70	$.50	$51.03	$.02	$.04
5	$33.72	*	$8.70	$.25	$7.70	$.50	$50.87	$.02	$.04
6	$32.30	*	$8.70	$.25	$7.70	$.50	$49.45	$.02	$.04
7	$31.24	*	$8.70	$.25	$7.70	$.50	$48.39	$.02	$.04
8	$29.35	*	$8.70	$.25	$7.70	$.50	$46.50	$.02	$.04

Local 106 Painters & Drywall Wage Rates
Effective May 4, 2015

Journeyperson Wage Rates:

Res., Comm. & Indus. Repaint	Base	Health & Welfare	Pension	Annuity	FTI/UM	FTI/NT'L	FCF	LMCI	MPWEA	STAR	DC82/FCF	**Total**	Vac *	Check-off Dues**
Class I	$27.86	$6.85	$5.15	$3.50	$0.37	$0.10	$0.01	$0.10	$0.03	$ 0.10	$0.01	$44.08	$2.70	$1.74
Class II	$28.46	$6.85	$5.15	$3.50	$0.37	$0.10	$0.01	$0.10	$0.03	$ 0.10	$0.01	$44.68	$2.70	$1.76

New Comm. & New Indus.	Base	Health & Welfare	Pension	Annuity	FTI/UM	FTI/NT'L	FCF	LMCI	MPWEA	STAR	DC82/FCF	**Total**	Vac *	Check-off Dues**
Class I	$29.36	$6.85	$5.15	$3.50	$0.37	$0.10	$0.01	$0.10	$0.03	$ 0.10	$0.01	$45.58	$2.70	$1.80
Class II	$29.96	$6.85	$5.15	$3.50	$0.37	$0.10	$0.01	$0.10	$0.03	$ 0.10	$0.01	$46.18	$2.70	$1.82

Foremen in charge of five (5) or more journeypersons shall be paid $1.00 per hour over the journeyperson rate.

Fair Contracting Foundation: $0.01 paid by employer, $0.01 paid by employee from Total Package.

Painter Apprentice

Hours	**%**	Base	Health & Welfare	Pension	Annuity	FTI/UM	FTI/NT'L	FCF	LMCI	MPWEA	STAR	DC82/FCF	**Total**	Vac *	Check-off Dues**
0-1000	50	$14.68	$6.85	$5.15	$3.50	$0.37	$0.10	$0.01	$0.10	$0.03	$ 0.10	$0.01	$30.90	$2.70	$1.28
1001-2000	55	$16.15	$6.85	$5.15	$3.50	$0.37	$0.10	$0.01	$0.10	$0.03	$ 0.10	$0.01	$32.37	$2.70	$1.33
2001-3000	60	$17.62	$6.85	$5.15	$3.50	$0.37	$0.10	$0.01	$0.10	$0.03	$ 0.10	$0.01	$33.84	$2.70	$1.38
3001-4000	70	$20.55	$6.85	$5.15	$3.50	$0.37	$0.10	$0.01	$0.10	$0.03	$ 0.10	$0.01	$36.77	$2.70	$1.49
4001-5000	80	$23.49	$6.85	$5.15	$3.50	$0.37	$0.10	$0.01	$0.10	$0.03	$ 0.10	$0.01	$39.71	$2.70	$1.59
5001-6000	90	$26.42	$6.85	$5.15	$3.50	$0.37	$0.10	$0.01	$0.10	$0.03	$ 0.10	$0.01	$42.64	$2.70	$1.69

Drywall Taper Appr

Hours	**%**	Base	Health & Welfare	Pension	Annuity	FTI/UM	FTI/NT'L	FCF	LMCI	MPWEA	STAR	DC82/FCF	**Total**	Vac *	Check-off Dues**
0-500	50	$14.98	$6.85	$5.15	$3.50	$0.37	$0.10	$0.01	$0.10	$0.03	$ 0.10	$0.01	$31.20	$2.70	$1.29
501-1000	60	$17.98	$6.85	$5.15	$3.50	$0.37	$0.10	$0.01	$0.10	$0.03	$ 0.10	$0.01	$34.20	$2.70	$1.40
1001-1500	70	$20.97	$6.85	$5.15	$3.50	$0.37	$0.10	$0.01	$0.10	$0.03	$ 0.10	$0.01	$37.19	$2.70	$1.50
1501-2000	75	$22.47	$6.85	$5.15	$3.50	$0.37	$0.10	$0.01	$0.10	$0.03	$ 0.10	$0.01	$38.69	$2.70	$1.55
2001-2500	80	$23.97	$6.85	$5.15	$3.50	$0.37	$0.10	$0.01	$0.10	$0.03	$ 0.10	$0.01	$40.19	$2.70	$1.61
2501-3000	85	$25.47	$6.85	$5.15	$3.50	$0.37	$0.10	$0.01	$0.10	$0.03	$ 0.10	$0.01	$41.69	$2.70	$1.66
3001-3500	90	$26.96	$6.85	$5.15	$3.50	$0.37	$0.10	$0.01	$0.10	$0.03	$ 0.10	$0.01	$43.18	$2.70	$1.71
3501-4000	95	$28.46	$6.85	$5.15	$3.50	$0.37	$0.10	$0.01	$0.10	$0.03	$ 0.10	$0.01	$44.68	$2.70	$1.76

*This Vacation Contribution is included in the taxable wage listed above, then deducted and remitted along with your Health & Welfare contribution.

PLUMBERS & STEAMFITTERS LOCAL #11

4402 AIRPARK BLVD.
DULUTH, MN 55811

JEFFREY DAVEAU SR.
BUSINESS MANAGER

218-727-2199 PHONE
218-727-2298 FAX

WAGE & BENEFIT REVISION EFFECTIVE MAY 4, 2015

BUILDING TRADES JOURNEYMAN

Base Pay	**$34.79**
Savings Fund	2.00
Dues Check off	.96
Building Fund	.20
Organizing Fund	.15
UA-PEC	.05
Local PAC	.01
Death Assessment	.01
Total Taxable	**$38.17**

Fringes	
Health & welfare	**6.85**
H R Fund	**.15**
Local Pension	**6.00**
National Pension	.78
Money Purchase	3.50
Training Fund	.50
International Training Fund	.10
Industry Fund	.35
H.V.A.C	.25
Total Fringes	**$18.48**
Total package	**$56.65**

Foreman $2.50 over Base Pay
General Foreman $3.50 over Base Pay

WAGES AS OF 5-4-2015	JOURNEYMAN	95%	90%	85%	80%	75%	70%
TAXABLE		⬇	⬇	⬇	⬇	⬇	⬇
BASE PAY	$ 34.79	$ 33.05	$ 31.31	$ 29.57	$ 27.83	$ 26.09	$ 24.35
SAVINGS FUND	$ 2.00	$ 1.90	$ 1.80	$ 1.70	$ 1.60	$ 1.50	$ 1.40
UNION DUES & ASSESSMENTS	$ 1.38	$ 1.38	$ 1.38	$ 1.38	$ 1.38	$ 1.38	$ 1.38
TOTAL TAXABLE	$ 38.17	$ 36.33	$ 34.49	$ 32.65	$ 30.81	$ 28.97	$ 27.13
FRINGES							
TRAINING FUND	$ 0.50	$ 0.50	$ 0.50	$ 0.50	$ 0.50	$ 0.50	$ 0.50
H R FUND	$ 0.15	$ 0.15	$ 0.15	$ 0.15	$ 0.15	$ 0.15	$ 0.15
HVAC	$ 0.25	$ 0.25	$ 0.25	$ 0.25	$ 0.25	$ 0.25	$ 0.25
UA TRAINING FUND	$ 0.10	$ 0.10	$ 0.10	$ 0.10	$ 0.10	$ 0.10	$ 0.10
HEALTH & WELFARE	$ 6.85	$ 6.85	$ 6.85	$ 6.85	$ 6.85	$ 6.85	$ 6.85
UA PENSION	$ 0.78	$ -	$ -	$ -	$ -	$ -	$ -
LOCAL PENSION	$ 6.00	$ 6.00	$ 6.00	$ 6.00	$ 6.00	$ 6.00	$ 6.00
MONEY PURCHASE	$ 3.50	$ 3.33	$ 3.15	$ 2.98	$ 2.80	$ 2.63	$ 2.45
INDUSTRY DEVELOPMENT	$ 0.35	$ 0.35	$ 0.35	$ 0.35	$ 0.35	$ 0.35	$ 0.35
TOTAL FRINGES	$ 18.48	$ 17.53	$ 17.35	$ 17.18	$ 17.00	$ 16.83	$ 16.65
TOTAL PACKAGE	$ 56.65	$ 53.86	$ 51.84	$ 49.83	$ 47.81	$ 45.80	$ 43.78

WAGES AS OF 5-4-2015	65%	60%	55%	50%	45%	40%	
TAXABLE	⬇	⬇	⬇	⬇	⬇	⬇	
BASE PAY	$ 22.61	$ 20.87	$ 19.13	$ 17.40	$ 15.66	$ 13.92	
SAVINGS FUND	$ 1.30	$ 1.20	$ 1.10	$ 1.00	$ 0.90	$ 0.80	
UNION DUES AND ASSESSMENTS	$ 1.38	$ 1.38	$ 1.38	$ 1.38	$ 1.38	$ 1.38	
TOTAL TAXABLE	$ 25.29	$ 23.45	$ 21.61	$ 19.78	$ 17.94	$ 16.10	
FRINGES							
TRAINING FUND	$ 0.50	$ 0.50	$ 0.50	$ 0.50	$ 0.50	$ 0.50	
HR FUND	$ 0.15	$ 0.15	$ 0.15	$ 0.15	$ 0.15	$ 0.15	
HVAC	$ 0.25	$ 0.25	$ 0.25	$ 0.25	$ 0.25	$ 0.25	
UA TRAINING FUND	$ 0.10	$ 0.10	$ 0.10	$ 0.10	$ 0.10	$ 0.10	
HEALTH & WELFARE	$ 6.85	$ 6.85	$ 6.85	$ 6.85	$ 6.85	$ 6.85	
UA PENSION	$ -	$ -	$ -	$ -	$ -	$ -	
LOCAL PENSION	$ 6.00	$ 6.00	$ 6.00	$ 6.00	$ 6.00	$ 6.00	
MONEY PURCHASE	$ 2.28	$ -	$ -	$ -	$ -	$ -	
INDUSTRY DEVELOPMENT	$ 0.35	$ 0.35	$ 0.35	$ 0.35	$ 0.35	$ 0.35	
TOTAL FRINGES	$ 16.48	$ 14.20	$ 14.20	$ 14.20	$ 14.20	$ 14.20	
TOTAL PACKAGE	$ 41.77	$ 37.65	$ 35.81	$ 33.98	$ 32.14	$ 30.30	

WAGE BREAKDOWN FOR LOCAL UNION # 11 APPRENTICES - BEGINNING MAY 4, 2015

Wages/Benefits Roofers Local Union 96 - Duluth Area

Effective July 1, 2016

Through June 30, 2017

Classification		Basic Hourly Wage	Vac. After Taxes	Assess. After Taxes	Taxable Wage Rate	National Pension Rate	Educ Fund Rate	Annuity Fund Rate	Health/ Welfare Rate	H&W HRA Rate	Appr. Training Rate	Roofing Industry Rate	Total Cost to Employer
Journeyman		30.00	2.50	0.50	33.00	3.55	0.03	3.09	7.60	0.50	0.35	0.30	48.42
Foreman		32.00	2.50	0.50	35.00	3.80	0.03	3.09	7.60	0.50	0.35	0.30	50.67
Apprentice Percentages Based on Hours Worked for Advancement:													
55%	A 0-250	17.75		0.40	18.15	0.25	0.03				0.35	0.30	19.08
55%	B 251-1500	17.75		0.40	18.15	0.25	0.03		6.00		0.35	0.30	25.08
60%	1501-2500	19.30		0.50	19.80	0.25	0.03	0.25	7.00		0.35	0.30	27.98
Freeze Unless 144 Hours (Phase 1) of Related Training is Completed													
65%	2501-3000	20.95		0.50	21.45	0.50	0.03	0.50	7.60	0.50	0.35	0.30	31.23
70%	3001-3500	22.60		0.50	23.10	0.50	0.03	0.50	7.60	0.50	0.35	0.30	32.88
75%	3501-4000	24.25		0.50	24.75	0.50	0.03	0.50	7.60	0.50	0.35	0.30	34.53
80%	4001-4500	23.40	2.50	0.50	26.40	0.75	0.03	0.75	7.60	0.50	0.35	0.30	36.68
Freeze Unless 288 Hours (Phase 2) of Related Training is Completed													
85%	4501-5000	25.05	2.50	0.50	28.05	0.75	0.03	0.75	7.60	0.50	0.35	0.30	38.33
90%	5001-5500	26.70	2.50	0.50	29.70	1.00	0.03	0.75	7.60	0.50	0.35	0.30	40.23
95%	5501-6000	28.35	2.50	0.50	31.35	1.00	0.03	0.75	7.60	0.50	0.35	0.30	41.88

Advancement to Journeyman if All Related Training (Phase 3) is Completed and **6000** Hours Worked

Due:		
	July 1, 2017:	$1.30
	July 1, 2018:	$1.30
	July 1, 2019:	$1.40
	July 1, 2020:	$1.40

Expiration date: June 30, 2021

DULUTH
COMMERCIAL & INDUSTRIAL
SHEET METAL WAGE RATES

EFFECTIVE MAY 4, 2015 - April 30, 2016

SOUTHERN ST. LOUIS, AITKIN, CARLTON, LAKE, COOK, AND DOUGLAS COUNTIES

			TAXABLE BASE*	SASMI	Health Fund	NATL PENSION	SUPP. PENSION	LOCAL 10 PENSION	FCF & LOCAL T.F.	SMOHI NEMI & ITI	LOCAL I.F. & DRUG TESTING	TOTAL PACKAGE
Journeyman			$31.56	$1.61	$9.02	$10.45	$2.15	$0.45	$0.64	$0.17	$0.23	$56.28
Foreman			33.56	1.61	9.02	10.45	2.15	0.45	0.64	0.17	0.23	58.28
General Foreman			35.56	1.61	9.02	10.45	2.15	0.45	0.64	0.17	0.23	60.28
Apprentice	HOURS											
	0-1000	55	17.36	1.01	9.02	5.75	1.18	0.25	0.64	0.17	0.23	35.61
	1001-2000	59	18.62	1.06	9.02	6.17	1.27	0.27	0.64	0.17	0.23	37.45
	2001-3000	63	19.88	1.11	9.02	6.58	1.35	0.28	0.64	0.17	0.23	39.26
	3001-4000	68	21.46	1.18	9.02	7.11	1.46	0.31	0.64	0.17	0.23	41.58
	4001-5000	72	22.72	1.23	9.02	7.52	1.55	0.32	0.64	0.17	0.23	43.40
	5001-6000	76	23.99	1.29	9.02	7.94	1.63	0.34	0.64	0.17	0.23	45.25
	6001-7000	80	25.25	1.34	9.02	8.36	1.72	0.36	0.64	0.17	0.23	47.09
	7001-8000	84	26.51	1.40	9.02	8.78	1.81	0.38	0.64	0.17	0.23	48.94
Classified worker												
	0-500	45	14.20	0.00	0.00	0.00	0.00	0.00	0.64	0.00	0.00	14.84
Plan B Single	501-on	45	14.20	0.00	2.69	2.45	0.00	0.00	0.64	0.00	0.00	19.98
Plan B Family	501-on	45	10.35	0.00	6.54	2.45	0.00	0.00	0.64	0.00	0.00	19.98

*The Taxable Base Pay rate includes $2.58 Vacation and Organizing deduction for journeymen and $1.58 for apprentices. The Vacation Fund deduction is $2.00 per hour for journeymen ($1.00 per hour for apprentices) and $.58 per hour for Organizing for both Journeymen and apprentices. For classified workers, the Vacation Fund deduction is $.55 per hour and there is a $.23 deduction for Organizing for a total deduction of $.78.

SASMI NOTE: The SASMI rate for Foreman and General Foreman are the same as the rate for Journeymen and there is no longer a different SASMI rate for overtime hours on any classification. All SASMI hours are paid at the straight time rate.

The current IRS mileage rate is $.575

April 17, 2015 Contract expires May 1, 2016

Shawn Broadrick
Business Manager

Brian W. Dunn
Financial Secretary Treasurer

James E. Tucker
President-Organizer

SPRINKLER FITTERS

Minnesota Breakdown of Wage and Benefit Package

Wage Rate	4/1/16	4/1/17	4/1/18	4/1/19	4/1/20
	$35.08	$36.33	$37.58	TBD	TBD

Foreman's Rate: $2.75 above journeyman scale
General Foreman: $5.00 above journeyman scale (22+ men on job)
Local Union 669 has a 5% dues check-off; 2 1/2% for Apprentices Class 1-4

Payroll Deduction:

Extended Benefit Fund: $.25 per hour for all hours worked payable to Local Union 669

Industry Advancement-State of Minnesota

Class 5 and higher $.25 per hour for all hours worked payable to Local Union 669

Benefit Package

Health & Welfare 4/1/16	$8.77	per hour for all hours worked
Health & Welfare 1/1/17	$9.17	per hour for all hours worked
Health & Welfare 1/1/18	$9.67	per hour for all hours worked
Health & Welfare 1/1/19	$10.02	per hour for all hours worked
Health & Welfare 1/1/20	TBD	
Health & Welfare 1/1/21	TBD	
Pension 4/1/16	$6.05	per hour for all hours worked
Pension 1/1/17	$6.20	per hour for all hours worked
Pension 1/1/18	$6.40	per hour for all hours worked
Pension 1/1/19	$6.60	per hour for all hours worked
Pension 1/1/20	TBD	
Pension 1/1/21	TBD	
Education 4/1/16	$ .35	per hour for all hours worked
Education 4/1/17	$ .37	per hour for all hours worked
Education 4/1/18	$ .42	per hour for all hours worked
International Training Fund 4/1/16	$ .10	per hour for all hours worked
Industry Promotion 4/1/16	$ .25	per hour for all hours worked
Supplemental Pension 4/1/16	$2.50	per hour for all hours worked
Supplemental Pension 4/1/17	$2.65	per hour for all hours worked
Supplemental Pension 4/1/18	$2.90	per hour for all hours worked
Supplemental Pension 4/1/19	TBD	
Supplemental Pension 4/1/20	TBD	

Travel Expenses	4/1/16	1/1/17	1/1/18	1/1/19
0-60 miles	No expenses	No expenses	No expenses	No expenses
60-80 miles	$17.50	$19.00	$19.00	$19.00
80-100 miles	$27.50	$29.00	$29.00	$29.00
100+ miles	$80.00	$90.00	$100.00	$105.00

If you should have any additional questions, please feel free to contact Business Agent James Westby at (507) 493-5671 or this office.

Created May 2016

Road Sprinkler Fitters Local Union No. 669
7050 Oakland Mills Road • Suite 200 • Columbia, Maryland 21046
(410) 381-4300 • fax: (301) 621-8045 • www.sprinklerfitters669.org

SCHEDULE 9 - SUNDAY AND HOLIDAYS

A. All work performed between midnight Saturday night and midnight Sunday night shall be classed as Sunday work and paid for at the rate of two (2) times the regular hourly rate; except as a regular shift which ends on Sunday or a holiday morning or begins at or after 6:00 p.m. on a Sunday or a holiday evening, shall be paid at the straight time rate.

B. Work performed on Sundays and the following holidays shall be compensated for at the rate of two (2) times the regular hourly rate: New Years Day, Memorial Day, Independence Day, Labor Day, Thanksgiving Day and Christmas Day. When Monday is designated and celebrated as one of the above listed legal holidays according to the regulations produced by the Federal government, they shall be observed as such.

DULUTH, SUPERIOR, AND IRON RANGE CONTRACTORS/BUILDERS SUPPLEMENTS - LOCAL 346

SCHEDULE 1 - CLASSIFICATIONS AND WAGES

Classifications:

GROUP 1
Boom Truck Operator

GROUP 2
Ready-Mix Driver
Tractor-Trailer Driver

GROUP 3
Driver and Warehouseman Foreman
Mechanic (where required)
Fork Lift Operator
Tandem or 3 Axle Truck Driver

GROUP 4
Warehouseman
Farm Tractor Driver
Single or 2 Axle Truck Driver
Dumpman

May 1, 2014

Group	Wages	Health & Welfare	Pension
1	$26.60	$ 7.95	$ 5.55
2	$26.05	$ 7.95	$ 5.55
3	$25.85	$ 7.95	$ 5.55
4	$25.60	$ 7.95	$ 5.55

Boom Truck Operator to receive an additional 50¢ increase 1st and 2nd year above the current rate in effect.

May 1, 2015

Group	Wages	Health & Welfare	Pension
1	$27.10	$ 8.15	$ 6.30
2	$26.55	$ 8.15	$ 6.30
3	$26.35	$ 8.15	$ 6.30
4	$26.10	$ 8.15	$ 6.30

May 1, 2016

Group	Wages	Health & Welfare	Pension
1	$27.75	$ 8.35	$ 6.90
2	$27.20	$ 8.35	$ 6.90
3	$27.00	$ 8.35	$ 6.90
4	$26.75	$ 8.35	$ 6.90

All monies negotiated into the benefits will be used only as needed.

Note A: When a contractor deems it advisable to hire an Apprentice Mechanic, his scale shall be as follows:

1st Year: 70% of Class 1 scale
2nd Year: 85% of Class 1 scale
After second full year, 100% of Class 1 scale

Health & Welfare and Pension paid to Minnesota Teamsters Construction Division Fringe Benefit Funds, c/o Zenith Administrators, P.O. Box 31, Minneapolis, Minnesota 55440-

PALANISAMI & ASSOCIATES, INC.
CONSULTING ENGINEERS

PROJECT MANUAL

PROJECT:	**HART DISTRICT PARKING RAMP – 2016-2017 REHAB** 115 East Superior Street Duluth, Minnesota PAI Project No. 16142
DATE:	October 5, 2016
OWNER:	City of Duluth
STRUCTURAL ENGINEER:	**PALANISAMI & ASSOCIATES, INC.** 306 W. Superior Street Suite 604 Duluth, MN 55802 218 820-7534 5661 International Parkway Minneapolis, MN 55428 Phone: 763 533-9403
PAI PROJECT MANAGER:	Mike Deiss, P.E. 218 820-7534 cell miked.engineer@palanisami.com

CERTIFICATION

I hereby certify that this plan, specifications, or report was prepared by me or under my direct supervision and that I am a licensed Professional Engineer under the laws of the State of

Minnesota

Michael L. Deiss, P.E.

Reg. No. 26604

Date: October 5, 2016

5661 International Parkway ◆ Minneapolis, Minnesota 55428 ◆ 763 533-9403 ◆ FAX 763 533-9586
306 West Superior Street Suite 604 ◆ Duluth, Minnesota 55802 ◆ 218 820-7534
◆ eng@palanisami.com ◆

HART DISTRICT PARKING RAMP – 2016-2017 REHAB

T A B L E O F C O N T E N T S

TITLE	PAGE
Title Page	1
Table of Contents	2
Supplementary Conditions	4
Summary of the Work	6
Bid Form	9
Unit Prices	11
Specification	
Section 03 16 00- Epoxy Coated Rebar	13
Section 03 74 00 – Concrete Repair	16
Section 05 50 00 – Metal Fabrications	19
Section 07 57 00 – Waterproof Polyurethane Deck-Coatings	23
Section 07 92 00 – Seakants	26
Section 07 93 00 – Expansion Joints	29
Drawings	
S-1 Work Summary	
S-2 Street Level Plan	
S-3 First Level Plan	
S-4 Second Level Plan	
S-5 Third Level Plan	
S-6 Fourth Level Plan	
S-7 Link Bridge to First Street Plan	
S-8 Details	

SUPPLEMENTARY CONDITIONS

PART 1 - GENERAL

1.01 CONDITIONS OF THE CONTRACT:

The General Conditions of the Contract for Construction is AIA Document A201, fourteenth Edition 1987, and Articles 1 through 14.

Any articles contained in the Supplementary Conditions may modify, delete or add to the provisions of the General Conditions, and shall take precedence over the General Conditions. Where any part of the General Conditions is modified or voided by these conditions, the unaltered part shall remain in effect.

1.02 AGREEMENT FORM

The Agreement shall be written where the basis of payment is a Stipulated Sum

a) Owner: City of Duluth, MN
b) Engineer: Palanisami & Associates, Inc. (The word 'Architect' shall be understood to mean 'Engineer' for this project.

1.03 SUMMARY

All the usual requirements of this section are included, with the following confirmations:

A. All portions of the Work that the Contractor's organization has not been accustomed to perform shall be performed under subcontracts. The Contractor shall request bids from subcontractors and shall deliver such bids to the Engineer and Owner who shall, with the advice of the Contractor, determine which bids will be accepted.
B. Schedule of Values: Shall be submitted before first application for payment.
C. Applications for Payment: Lien waivers will be required with all requests for payment except the first one.
Ten percent (10%) of the requests for payment shall be retained until the project is complete, and all the punch list items are completed to the satisfaction of the Engineer.
D. Insurance: See City of Duluth Indemnification and Insurance Requirements attached.

1.04 CUTTING AND INSTALLING NEW PATCHES

A. Add the following to Paragraph 3.14:
3.14.3 Cutting shall be accurately located and neatly done.
Unnecessary cutting shall be avoided.
3.14.4 Installation of new patches shall be done by skilled mechanics experienced in the particular type of work involved. The finished patch shall match with existing concrete surface.

1.05 VERIFICATION OF FIELD CONDITIONS

The Contractor is required to field visit the job site and familiar with the condition before submitting the bid.

1.06 SAFETY OF PERSONS AND PROPERTY

A. Add the following to Paragraph 10.2.3:
The Contractor shall erect and maintain dust barriers to totally enclose his work area to protect all adjacent property and vehicles from damage. All damage and claims arising as a result of the Contractor failure to comply with this requirement shall be at the expense of the Contractor.

B. Contractor shall install professionally made traffic directional signs as required and maintain the traffic flow smoothly without interference by the contractor's workers, equipment and/or repair area. No hand written signs shall be permitted.

1.07 RETAINAGE

Supplement Article 9 of the General Conditions:

To insure the proper performance of the Contract, the Owner will retain 5% of the amount of each Certificate for Payment issued by the Engineer. The Owner will retain such retainage until all the punch list items are completed to the satisfaction of the Facilities Manager and Engineer -

1.08 FINAL COMPLETION

Work shall be finally completed by the date as directed by Owner.

1.09 UNIT PRICE CONTRACT

Payment for all work shall be based on actual field measured quantities per the Unit Prices for each work item given on the Unit Price form provided. The Unit Price for each work item shall include all layout, field verification, labor, equipment, materials, permits, demolition, disposal, site preparation, shoring, dust barriers, traffic control, temporary facilities, protection of property, and cleanup required to complete the work item as shown on the drawings and specified in the project manual.

SUMMARY OF THE WORK

PART 1 - GENERAL

1.01 CONDITIONS OF THE CONTRACT

The Conditions of the Contract (General, Supplementary and other Conditions) and the General Requirements (Sections of Division 1) are hereby made a part of this Section.

1.02 SCOPE OF WORK

The scope of the project is as described on Sheets S-1 through S-8. Material specification sections are attached to this project manual.

1.03 EXAMINATION OF SITE

1. The Contractor is required to visit the site, make a thorough examination of conditions and all the limitations pertaining to the work prior to submitting the bid.
2. No additional costs will be allowed because of the contractor's misunderstanding of the amount of work involved, or his lack of knowledge of any conditions pertaining to the work, based on his neglect or failure to make a proper examination of the site.
3. Contractor shall conduct his own field survey to verify all existing conditions shown on drawing.

1.04 COMPLETION

The work must be fully complete by the date as directed by the Owner. The Contractor shall submit a proposed milestone schedule from award of contract through completion.

1.05 PERMITS, FEES AND NOTICES

Building Permit: The General Contractor shall secure and pay for the building permit. Fees shall include the building permit; fees, State Surcharge and any other fees customarily charged for the building permit.

Other Permits and Fees: The General Contractor and each Subcontractor shall secure and pay for all other permits and governmental fees, licenses and inspections necessary for the proper execution of the Contract, and which are legally required at the time bids are received.

All work is to be done in full accordance with national state and local codes, ordinances, and/or regulations having jurisdiction over this work.

1.06 PRODUCT, DELIVERY, STORAGE AND HANDLING

Deliver, store and handle materials in a manner that will prevent damage. Store materials clear of the ground and protect from water and the elements. Protect finished surfaces from scratching and damage. Replace damaged materials.

Do not deliver material subject to damage unduly long before they are required in the work and suitable storage facilities are available at the site.

Deliver packaged materials in their original, unopened containers or wrapping with labels intact.

1.07 PRODUCT DATA AND SHOP DRAWING SUBMITTALS

A. Submit product data and shop drawings as required by the specifications.

B. Submit to: Mike Deiss, P.E., Project Engineer
Palanisami and Associates, Inc.
5661 International Parkway
Minneapolis, MN 55428
miked.engineer@palanisami.com

C. Product data and shop drawing submittals shall be in the form of paper copies or electronic (.pdf) files. Electronic files e-mailed to the Project Engineer are preferred.

D. Provide a clear space (3” X 4”) on each submittal for engineer’s approval stamp.

E. Identify product submittals and shop drawings with the relevant specification section numbers and/or drawing detail numbers.
F. The submitted shop drawings shall show field verified dimensions.
G. The general contractor shall review and approve all supplier's and sub-contractor's product data and shop drawings before they are submitted to Project Engineer Palanisami and Associates, Inc. for review.
H. Review of shop drawings by the Project Engineer Palanisami and Associates, Inc. is for general conformance with design intent and Contract requirements, and does not relieve the Contractor of responsibility to verify accuracy of dimensions, obtain field dimensions, coordinate dimensions with work of others and prevent interference with other equipment and other features of the work.
I. Acceptance by Engineer of product data and shop drawings, except as otherwise provided in preceding paragraphs, shall not be construed as: (1) permitting any departure from Contract requirements, (2) relieving Contractor of responsibility from errors in details, dimensions or otherwise, that may exist, (3) accepting departures from additional details or instructions previously furnished by the Project Engineer Palanisami and Associates, Inc. and (4) confirming clearances or lack of interference.
J. Reviewing and acceptance by the Project Engineer Palanisami and Associates, Inc. shall not relieve the Contractor of responsibility for deviations from drawings and specifications unless such deviation is specifically called to the Project Engineer's attention by a specific indication of "note deviation:" or similar clear and bold indication at time of submission, nor shall it relieve them of responsibility for errors or omissions in shop drawings.

1.08 WORKING HOURS & INTERUPTIONS OF SERVICE

A. The Contractor may work normal daytime business hours, evenings and nights.
B. The Contractor shall not interrupt, cut or alter in any way the existing services and utilities of the Facility, including but not limited to: Lighting, electrical power, air handling systems, sprinkler, fire-alarm, security systems, and water, without express written notice to, and approval from, the Facility.
C. If the Contractor must interrupt any service to perform the Work of this Contract, they shall notify the Facility at least seven (7) days prior to altering such service, and they shall receive written permission from the Facility to conduct such work before commencing.
D. All interruption of services shall be coordinated with the Facility.

1.09 JOB-SITE MANAGEMENT AND PROTECTION

A. From the time the Contractor for this project commences work at the site until the Contract is completed, the Contractor is responsible for the care of the site and buildings to the extent their work, acts, operations or use of the site affects the site and buildings.
B. All existing buildings, structures, site features, and property shall be protected from damage by any operation connected with the work of the Project. The Contractor shall take all necessary precautions to protect the existing building, its contents and all systems from damage during the course of work. It shall be the responsibility of the Contractor to restore to original condition, and to the satisfaction of the Owner, all items damaged during the course of the work.
C. In the event of damage to walls and ceiling, after required repairs have been made, the areas shall be repainted to match existing. All repainting shall be done over the entire plane of that surface to the nearest break in the plane, that is wall inside or outside corner.
D. The Contractor shall confine their apparatus, materials, equipment, and operations of workers to the construction areas indicated on the drawings or otherwise imposed by the Owner. The site and Project shall not be unreasonably encumbered with materials and equipment. Neat and orderly stockpiling and other operations shall be maintained and debris shall be regularly removed from the site.
E. Temporary relocation of electrical conduit and/or boxes as required for completion of work described herein shall be the responsibility of the Contractor and shall be performed by a licensed electrical contractor. No additional fees shall be paid by the Owner for such relocation.

1.10 CONSTRUCTION FACILITIES AND TEMPORARY CONTROLS

A. Temporary Enclosures, Barricades and Fences

1. Provide protective coverings and enclosures necessary to prevent damage to existing spaces and materials to remain.
2. Provide temporary bracing, shoring, needling and support during demolition, cutting, remodeling and related new construction as necessary for the execution of the work and protection of persons and property. Perform all work with appropriate supports, protection and methods to prevent all collapse, settling or damage to persons or property. Provide adequate supports for the loads to be carried, with loads properly distributed, including to lower levels if necessary.
3. Provide barriers to prevent unauthorized entry to construction areas and to protect existing facilities and adjacent properties from damage caused by construction operations.

B. Temporary Power and Lights

1. The Owner will provide power at no cost to the Contractor provided it is conservatively used. The Contractor shall be responsible for the temporary connections including their cost, and shall remove them upon completion of the work. Contractor must ensure protection of the existing system and power demands shall not exceed existing service capacities. The Contractor at the Contractor's expense shall repair any and all damage to the existing systems. Power shall be provided from the nearest appropriate point of service. Permanent building lighting may be used during construction.

C. Temporary Heat

1. Contractor shall provide temporary heating devices as needed to maintain specified conditions for construction.
2. Enclose building prior to activating temporary heating.

D. Temporary Ventilation

1. Ventilate enclosed areas to achieve curing of materials, to dissipate humidity, and to prevent accumulation of dust, fumes, vapors and gases.

E. Temporary Water

1. The Contractor may utilize Owner’s existing water system. Contractor shall extend and supplement with temporary devices as needed.

F. Telephone Service

1. Contractor shall provide, maintain and pay for telephone service as needed.

G. Sanitary Facilities

1. Contractor shall not use Owner’s existing facilities within the job site.

H. Parking

1. The Contractor shall make arrangements with the Owner for parking.

I. Confinement of Work to Area

1. The Contractor shall confine work and materials to the work area. All areas adjacent to the work area must be free of debris, materials, tools, etc. at all times.

J. Protection

1. All damage to adjacent buildings or their contents caused by the work of this contract shall be corrected and restored to their original condition by the Contractor at no additional cost to the Owner.

K. Dust Barriers: The Contractor shall erect and maintain dust barriers to totally enclose his work area to protect all adjacent property and vehicles from damage. All damage and claims arising as a result of the Contractor failure to comply with this requirement shall be at the expense of the Contractor.

L. Traffic: Work areas and traffic control shall be phased and coordinated with the City of Duluth and Interstate Parking.

M. The ramp will be in operation during construction. The Contractor shall coordinate all work with the City of Duluth Parking Manager, Mark Bauer, and the on-site parking manager, John Clark, Interstate Parking Company 218 727-7275 jclark@interstateparking.com.

1.11 COMMUNICATION WITH THE OWNER

All inquiries, information and coordination with the Owner relating to scheduling of work within existing buildings, use of the site interruption of utility services and similar matters shall be directed to City of Duluth Parking Manager, Mark Bauer, and the on-site parking manager, John Clark, Interstate Parking Company 218 727-7275.

1.12 WORK ON OTHER PROPERTY

The Contractor shall return to original condition at no cost to Owner any and all existing property on or adjacent to the site, including but not limited to, walks, pavements, roadways, structures and utilities which are cut or damaged by construction and are not designed for removal, relocation or replacement in the course of construction. Work occurring on public property shall be constructed in accordance with all laws, ordinances, rules, regulation and orders of any public authority having jurisdiction.

1.13 WARRANTIES

All work shall be warrantied for minimum of one-year from date of Substantial Completion and as specified in specific sections below for sealants and deck coatings.

1.14 PROTECTION OF FLOOR DRAINS

The Contractor shall take all means necessary to protect all existing floor drains from debris and run-off, including but not limited to placing filter fabric below all drain castings. Contractor shall be responsible for removing concrete debris or run-off from drain system.

1.15 NOISE RESTRICTIONS

The Contractor shall comply with all noise restriction as directed by the Owner and/or required by the City of Duluth at all times during demolition and construction. The Contractor shall place double insulated sound blankets at the outside perimeter of parking ramp if directed by the Owner.

1.16 CLEANUP

On a regular basis throughout the course of the project and immediately prior to the inspection for the Substantial Completion of Work, Contractor shall remove all waste materials, debris, and rubbish from the building, site, and roof to the satisfaction of the Owner. Conduct all cleaning and disposal operations to comply with codes, ordinances, regulations, and anti-pollution laws

HART DISTRICT PARKING RAMP – 2016-2017 REHAB

BID FORM

OWNER: City of Duluth, MN
411 West First Street
Duluth, MN 55802

BIDDER: _____

BIDDER ADDRESS: _____

_____

_____

PRIME CONTRACT BID

1. We hereby submit our Bid for Hart District Parking Ramp 2016-2017 Rehab, 115 East Superior Street, Duluth, MN.

2. We have examined the drawings, specifications, form of agreement and other Contract Documents, visited the site and noted all conditions affecting the work. We agree to accomplish the work in strict accordance with the requirements of drawings and specifications and other Contract Documents for the work as prepared by Palanisami & Associates, Inc. dated October 5, 2016 for the amounts stipulated herein.

3. We agree to hold open the bid for THIRTY (30) DAYS from the date of bid opening.

4. PHASE 1 – 2016: TOTAL BASE BID: Lump Sum for All Work: $_____

_____
(Words)

(Provide the unit prices for all items) (Total Base Bid must equal sum of all Unit Price extensions)

PHASE 2 – 2017: TOTAL BASE BID: Lump Sum for All Work: $_____

_____
(Words)

(Provide the unit prices for all items) (Total Base Bid must equal sum of all Unit Price extensions)

5. DATE OF SUBSTANTIAL COMPLETION: If the undersigned is notified of the acceptance of this bid within 30 days, he agrees to complete the work under this contract by _____.

5a. Contractor shall maintain continuous work schedule throughout project. Earlier completion of the project is acceptable.

5b. Contractor shall submit their final bill/invoice on or before the specified dates in #5. Along with the final invoice, submit the applicable warranty certificates.

6 ACCEPTANCE OF BIDS: In submitting this bid, it is understood that the right is reserved by Owner to accept any bid in best interest, reject all bids, and to waive informalities and discrepancies in bids and bidding procedure.

ADDENDA: We hereby acknowledge the Addendum instructions numbered _____ _____ have been received and/or the requirements therein have been incorporated in this bid. Addendum items, approvals or requests for clarification shall be submitted to the Engineer in writing at least three days prior to bid date.

8. CONTRACT: If awarded the Contract, the undersigned agrees to execute the Form of Agreement for the above stated compensation.

9. SUB-CONTRACTORS: Identify all Sub-contractors who will perform work which will not be self-performed by Bidder below:

Work Item, Description or Section:_____

Sub-Contractor and Contact Information: _____

_____

Work Item, Description or Section:_____

Sub-Contractor and Contact Information: _____

_____

Work Item, Description or Section:_____

Sub-Contractor and Contact Information: _____

_____

10. Proposed Construction Schedule attached? YES_____ NO_____

SIGNED:

_____

Name

UNIT PRICES:

Note: The Unit Price for each work item shall include all layout, field verification, labor, equipment, materials, permits, demolition, disposal, site preparation, shoring, dust barriers, traffic control, temporary facilities, protection of property, and cleanup required to complete the work item as shown on the drawings and specified in the project manual.

WORK ITEM	DESCRIPTION	UNIT	ESTIMATED QUANTITY	UNIT PRICE	EXTENSION
PHASE 1 – 2016					
1.0	Mobilization General Conditions	LS	1	$	$
1.1	Remove and Replace Double-Tee Flange Full Depth	SF	1050	$	$
1.2	Remove and Replace Double-Tee Joint Sealant	LF	2000	$	$
1.3	Repair Tee-to-Tee Connections	Each	60	$	$
1.4	Replace Tee-to-Tee Connection Embed	Each	30	$	$
1.5	ALLOWANCE Heated Enclosures	LS	1	$	$ 10,500.00
1.6	ALLOWANCE Electrical	LS	1	$	$ 4,000.00
PHASE 2 – 2017					
2.0	Mobilization General Conditions	LS	1	$	$
2.1	Remove and Replace Double-Tee Flange Full Depth	SF	500	$	$
2.2	Remove and Replace Double-Tee Joint Sealant	LF	430	$	$
2.3	Repair Tee-to-Tee Connections	Each	24	$	$
2.4	Replace Tee-to-Tee Connection Embed	Each	18	$	$
2.5	Remove and Replace Control Joint Sealant At Crossovers	LF	1050	$	$

2.6	Waterproof Deck Coating Type 1 – Heavy Duty	SF	5000	$ _____	$ _____
2.6A	Waterproof Deck Coating Type 2 – Heavy Duty UV Stable	SF	5000	$ _____	$ _____
2.7	Partial Depth Concrete Patch-Vertical Column Face	SF	10	$ _____	$ _____
2.8	Overhead Beam Ledge Repair	SF	20	$ _____	$ _____
2.9	Remove and Replace Concrete Apron Slab-on-Grade	SF	175	$ _____	$ _____
2.10	Remove and Replace Expansion Joint Between Double-Tees and Slab-on-Grade	LF	56	$ _____	$ _____
2.11	not used				
2.12	New Expansion Joint Between Double-Tees and Slab-on-Grade	LF	18	$ _____	$ _____
2.13	Double-Tee Stem Repair	LOC.	1	$ _____	$ _____
2.14	Remove and Replace Expansion Joint at Link Bridge	LF	48	$ _____	$ _____
2.15	Repair Slab Edge and Blockout at Expansion Joint	SF	50	$ _____	$ _____
2.16	Add Supplemental Tee Stem Bracket	Loc.	3	$ _____	$ _____
2.17	ALLOWANCE Electrical	LS	1	$ _____	$ 4,000.00

SPECIFICATION

03 21 16 – EPOXY-COATED REINFORCING

PART ONE - GENERAL

1.01 SECTION INCLUDES

A. The Conditions of the Contract and Division 1, as indexed apply to this Section.
B. The work of this section shall consist of furnishing, delivering, and placing epoxy coated reinforcement as noted on the drawings.

1.02 RELATED WORK

A. Section 03 74 00 - Concrete Repair

1.03 REFERENCES

A. ACI 301-89 - Specifications for Structural Concrete for Buildings.
B. ACI 315R-94 - Details and Detailing of Concrete Reinforcement.
C. ACI 318R-95 - Building Code Requirements for Reinforced Concrete.
D. ACI SP-66 - American Concrete Institute - Detailing Manual.
E. AWS D1.4 - Structural Welding Code, Reinforcing Steel.
F. ASTM A615 - Deformed and Plain Billet Steel Bars for Concrete Reinforcement.
G. ASTM A706 - Low-Alloy Steel Deformed Bars for Concrete Reinforcement.
H. ASTM A775 - Epoxy Coated Reinforcing Steel Bars
I. ASTM D3963 - Epoxy Coated Reinforcing Steel.
J. CRSI - Concrete Reinforcing Steel Institute - Manual of Standard Practice.
K. CRSI 63 - Recommended Practice for Placing Reinforcing Bars.
L. CRSI 65 - Recommended Practice for Placing Bar Supports, Specifications and Nomenclature.

1.04 QUALITY ASSURANCE

A. The coating applicator shall have a program of quality control testing to assure that the coated bars comply with the requirements of this specification. Testing shall be conducted for each bar size coated on the following basis:
   1. Coating thickness shall be measured ten times per hour.
   2. One bend test shall be conducted for each day's processing. If there is evidence of cracking or de-bonding of the coating during bending tests, two additional samples from bars of that same size and coated that same day shall be tested successfully.
   3. Preheat temperature, holiday detection, and cure times shall be continuously monitored.
   4. Written certifications of the applicable results of the quality control program shall accompany each shipment. A copy of the certifications shall be sent to the Owner and Engineer.

1.05 SUBMITTALS

A. The Contractor shall furnish the Owner and the Engineer with written certification from the coating manufacturer that the coating resin for steel reinforcement has been approved by the National Bureau of Standards with written use and application of the coating resin.

1.06 DELIVERY, STORAGE AND HANDLING

A. All systems for handling epoxy coated bars shall have adequately padded contact areas wherever possible.

B. All bundling bands shall be padded and all bundles shall be lifted with a strong back, multiple supports or platform bridge so as to prevent bar to bar abrasion from sags in the bar bundle.
C. Bars or bundles shall not be dropped or dragged.
D. Bars or bundles shall be adequately supported in transit in a manner so as to prevent damage to the coating.
E. Store bars off ground and protect from abrasion and damage.

PART TWO - PRODUCTS

2.01 REINFORCING STEEL

A. All the reinforcing shall be ASTM 615, Grade 60 and shall be deformed meeting the requirements of ACI 318-95.
B. The epoxy coating material shall be one of the following:
   1. "Scotchkote 213" by Minnesota Mining and Manufacturing Company.
   2. "Flintflec 531-6086" by E. E. DuPont Denemours Company, Inc.
   3. "Epoxiplate R346 or R349" by Armstrong Products Company.
   4. "Epoxy Powder 720-A-009" by Cook Paint and Varnish Company.
   5. or other equivalent product.
   6. Patching material shall be of the type recommended by the epoxy powder manufacturer, compatible with the epoxy coating and inert in concrete.
C. Coating Application
   1. The surface of the reinforcement bars shall be prepared in accordance with the requirements of the epoxy powder manufacturer. The coating shall be applied to the cleaned surface as soon as possible after cleaning and before visible oxidation of the surface occurs, but in no case shall more than eight hours elapse.
   2. The coating shall be electrostatically applied as specified by the powder coating supplier. The film thickness after curing shall be seven mils with a tolerance of plus three mils and minus two mils as measured in accordance with ASTM G12-77. The coating applicator shall check each production lot, using the method he deems most effective for measuring cure, and certify that the entire production lot of coated bars supplied is fully cured.
   3. The coating shall be checked visually after cure for continuity. It shall be free from holes, voids, contamination, cracks, and damaged areas. All visible defects shall be patched by the coating applicator. Patching shall be done in accordance with the manufacturer's recommendations and to the prescribed thickness.
   4. The coating shall not have more than two holiday (pinholes not visible to the naked eye) in any linear foot of the coated bar. Holiday checks shall be made with a 67-1/2 volt holiday detector.
   5. The flexibility of the coating shall be evaluated by bending the coated reinforcing bars 120 degrees (after rebound) around a 6" diameter mandrel. The bend shall be made at a uniform rate and may take up to one minute to complete. The two longitudinal deformations may be placed in a plane perpendicular to the mandrel radius and the specimen shall be at a thermal equilibrium of 77 degrees F. plus or minus 7 degrees (25 degrees C. plus or minus 5 degrees).
   6. No cracking or debonding of the coating shall be visible to the naked eye on the outside radium of the bent bar.
D. Patching
   1. Patching of the coating on straight areas of the bars will be required if damage exceeds two per cent of the coated area within the total straight portion. When coating repair is required, all damage shall be cleaned and patched on the straight areas of the bar.
   2. Patching and coating within bent areas of the bars will be required if bond loss and damage exceeds five per cent of the coated area within each bend area. When coating repair is required, all damage within each bent area shall be cleaned, removing all de-bonded materials

and patched, but each bent area may be treated individually. Hairline cracks, without bond loss or other damage, or fabrication bends need not be patched.

3. All required patching shall be performed as soon as possible after fabrication and before visible oxidation occurs. Patching shall be done at the fabricator's plant using patching material specified by the powder manufacturer.

2.02 SUPPORT ACCESSORIES

A. Tie wires: 16 gauge annealed, epoxy or plastic coated.

B. Chairs, Bolsters, Bar Supports, Spacers: Size and shape for strength and support of reinforcement during installation and concrete placement; gray epoxy-coated steel or high impact plastic with anti-skid protrusions.

PART THREE - EXECUTION

3.01 INSPECTION

A. Test samples shall be furnished by the coating applicator, fabricator, or contractor as directed by the Engineer.

B. The Owner or Engineer reserves the right to test samples obtained from the materials delivered to the job site.

C. The Owner or Engineer shall have free access to the plants of the coating applicator and fabricator for inspection.

3.02 FABRICATION

A. All bars shall be delivered bent to conform accurately to CRSI Manual of Practice and to details and approved shop drawings, and shall be bent cold. Bars shall not be bent in a manner that will injure the materials or crack the epoxy coating. Kinks or bends not shown on drawings shall not be used.

3.03 INSTALLATION

A. Tie wires to be used in contact with epoxy coated bars shall be either epoxy or plastic coated.

B. Place epoxy coated steel on epoxy coated bar supports.

C. All cut ends and all areas of damage having an area of .25 square inches or larger shall be patched. Additional repair will not be required if the remaining coating damage is less than three per cent of the coated area on any linear foot of the bar. Where repair is required, damaged areas shall be repaired as soon as possible after each span is placed.

3.04 FIELD QUALITY CONTROL

A. Refer to section 03 74 00.

END OF SECTION

03 74 00 – CONCRETE REPAIR

PART 1 - GENERAL

1.01 SECTION INCLUDES:

A. The Conditions of the Contract and Division 1 as indexed apply to this section.
B. Work in this Section shall include furnishing all materials, labor and equipment necessary to complete all concrete repair work shown in the drawings and specified herein.

1.02 RELATED WORK

A. Section 07 52 00 – Deck Coating
B. Section 07 92 00 – Sealant.
C. Section 09 93 13 – Exterior Concrete Stain

1.03 APPLICABLE STANDARDS

A. Specifications for Structural Concrete - ACI 301-84.
B. Guide to Durable Concrete ACI 201.2R-77 (82).
C. Hot Weather Concreting - ACI 305R.
D. Cold Weather Concreting - ACI 306R-88.

1.04 SUBMITTALS:

A. Concrete Mix Design
B. Manufacturer's Data Sheets for all products.

1.06 TESTING

A. The Owner shall retain an independent testing laboratory for performing tests on plastic concrete and compression test.
B. The ITL shall obtain freshly mixed concrete sample in accordance with ASTM C172 and conduct air content, slump and temperature of concrete delivered or mixed at job site on a periodic basis.
C. Make one set of 8" test cylinders (consisting of three) for randomly selected pours.
E. The ITL shall Conduct compression tests of the field-cast test cylinder after laboratory curing.

1.07 WARRANTY

A. Contractor shall furnish a warranty that the concrete patch work will remain in serviceable condition without any delamination or debonding for a period of one (1) year from the date of completion.

PART 2 - PRODUCTS

2.01 ACCEPTABLE PRODUCTS

A. Patching Material:
   a. Sikatop 122/123 Plus of SIKA
   b. 1061 Repair Mortar by BASF
   c. Euco Verticoat by Euclid Chemical
   d. HP-S10 Concrete, MS-D1 Shotcrete, and MS-S10 Concrete by King Packaged Materials Co.
   e. Equivalent product submitted for approval prior to bid.

B. Rebar Coating:

a. Zincrich Rebar Primer by BASF
b. Armatec 110 Epocem by Sika
c. Emaco P24 by BASF
d. Equivalent product submitted for approval prior to bid.

C. Bonding Agent:
a. cement slurry
b. Emaco P24 by BASF
c. Equivalent product submitted for approval prior to bid.

2.02 CONCRETE MATERIAL

A. Primary
1. Cement: Type I or III, ASTM C150.
2. Coarse Aggregate: ASTM C33.
3. Fine Aggregate - Clean, natural sand conforming to ASTM C33.
4. Water - Clean and free from deleterious amounts of acid, alkalies, chlorides or other organic impurities.
5. Admixtures - No admixtures containing calcium chloride or thiocyanates or admixture having more than 1% chloride ions by weight of admixture shall be used in concrete.
   a. Air entrainment - ASTM C260
   b. Water Reducing - ASTM C494 Type A
   c. High Range Water Reducer - ASTM C494 Type F
   d. Water Reducing & Retarding - ASTM C494 Type D
6. Concrete Mix Designs:
   a. Overhead Beam Repairs and Tee Stem Repairs
      1. f'c = 5000 psi
      2. Minimum cement = 610 lbs / CY
      3. Maximum water cement ration = 0.40
      4. Maximum aggregate size = 3/8"
      5. Maximum slump = 4” (6” w/superplasticizer)
      6. Air Content: 6½ ± 1.5%

   Full Depth Double-Tee Patches:
   - f'c = 5000 psi
   - Minimum cement = 610 lbs / CY
   - Maximum water cement ratio = 0.40
   - Maximum aggregate size = 3/4"
   - Maximum slump = 4” (6” w/superplasticizer).
   - Air Content: 6½ ± 1.5%

   Slab-on-Grade:
   - f'c = 4000 psi
   - Minimum cement = 564 lbs / CY
   - Maximum water cement ratio = 0.45
   - Maximum aggregate size = 3/4"
   - Maximum slump = 4” (6” w/superplasticizer).
   - Air Content: 6½ ± 1.5%

PART 3 – EXECUTION

A. The approximate locations of concrete delamination on beams are shown on the drawings. Contractor shall refer to the drawings and field mark the delaminated, spalled and unsound concrete area by tapping as required.
B. Contractor must field verify all existing mechanical and electrical fixtures/conduit attached or embedded in the structure. Contractor must notify engineer and Owner’s representative and coordinate with Owner’s

representative for protection and/or temporary removal and restoration of all existing mechanical and electrical fixtures/conduit attached or embedded in the structure as required.

C. Saw-cut the patch boundary minimum 1/2" deep for both horizontal and vertical patches. The boundary shall be straight and regular.
D. Concrete shall be removed by 15-30lb. chipping hammers. All unsound and/or delaminated concrete shall be removed to sound material. Minimum concrete removal depth is one inch.
E. Sandblast exposed corroded rebar to bare metal. Coat the entire rebar with specified rebar coating all around.
F. If existing rebar is corroded more than 20%, remove and replace the corroded portion of existing rebar with new rebar. Lap new rebar minimum 60 times bar diameter length with existing rebar. Extend the patch area and expose the non-corroded existing steel as required to achieve the minimum lap length.
G. Install ¼" x 3" long tapcon screws at 12"o.c. both ways at all overhead and vertical patches.
H. The engineer to verify the surface preparation and approve application of concrete/patch material.
I. Clean the patch area with compressed air prior to application of patch material.
J. Wet the cleaned concrete surface with water before patching so that the exposed surface attains saturated surface condition. This applies to top, vertical and overhead surface patches. All free water shall be removed shortly before patching.
K. Shotcreting shall conform to all requirements of ACI 506.2, except as modified herein.
L. Apply cement (or specified patching mortar) slurry or specified bonding agent to the damp concrete surface.
M. Top surfaces shall have medium broom finish. Vertical and overhead surfaces shall have trowel or form finish.
N. Tool the joint between the new concrete and existing concrete.
O. Install trowel-applied mortar per manufacturer's specification and finish to match with existing surface.
P. Apply sealant to the joint between the new concrete and existing concrete.
Q. Refer to notes on Sheet S-1 for cold-weather concrete requirements.

END OF SECTION

05 50 00 – METAL FABRICATIONS

PART ONE - GENERAL

1.01 SECTION INCLUDES

A. Bidding Requirements, Conditions of the Contract and pertinent portions of Sections in Division One of these Specifications apply to the Work of this Section as fully as though repeated herein.

B. The Work to be done under this Section includes all labor materials, services and equipment necessary to the proper completion of all structural steel and miscellaneous steel framing and components as shown on the drawings and as specified herein.

1.02 QUALITY ASSURANCE

A. Reference Specifications
   1. American Institute of Steel Construction (AISC) "Specifications for the Design, Fabrication and Erection of Structural Steel for Buildings," adopted November 1, 1978.
   2. AISC "Code of Standard Practice", adopted September 1, 1976.
   3. American Welding Society (AWS) "Structural Welding Code", D1.1-86.

1.03 QUALITY CONTROL

A. Fabricator Qualifications: A qualified fabricator who participates in the AISC Certification program and is designated an AISC Certified Plant, Category STD at time of bid.

B. The Fabricator shall engage at his own expense an independent qualified weld inspector to perform inspection as outlined in Sections 6.1, 6.2, 6.3, 6.4 and 6.5 of the AWS Structural Welding Code for shop welds.

C. All shop and field welding shall be done by personnel qualified according to Section 5 of the AWS D1.1-83.

1.04 SUBMITTALS

A. Shop Drawings
   1. Prepare complete shop and setting drawings based on current AISC Specifications for approval by Architect/Engineer prior to fabricating the work.
   2. Shop drawings shall include all information necessary for the fabrication of the component parts of the structure. They shall indicate size and weight of members, type and location of shop and field connections, the welding symbols used on shop drawings shall be as adopted by the American Welding Society.

1.05 PRODUCT DELIVERY, STORAGE AND HANDLING

A. Store off ground in manner that will prevent rust damage. Repair or replace all damaged steel to "as fabricated" condition.

1.06 MEASUREMENTS

A. The Contractor shall verify all dimensions given on the drawings and shall make such field measurements as are necessary to lay out the work properly and assure proper fit and proper elevations.

B. The Contractor shall be fully responsible for accuracy of all measurements and laying out of all the work.

1.07 DAMAGE TO MATERIALS

A. The Contractor shall use care in storing, handling and erecting all materials and shall support same properly at all times to insure that no piece will be bent, twisted or otherwise injured. Material damage due to carelessness of the Contractor shall be corrected at the Contractor's expense, to the approval of the Architect/Engineer before being erected.

PART TWO - PRODUCTS

2.01 MATERIALS

A. Structural Steel Angles, Plates, Channels: ASTM A36 or as noted on drawings.
C. Welding Electrodes and Fluxes: Conform to AISC 1.4.5 and its referenced AWS Specifications, except see Section 1.03 of these specifications for quality control.
F. Expansion Bolts: Stainless Steel, Hilti Kwik Bolt KB3 or equivalent.
G. Where indicated on the drawings, steel fabrications shall be hot-dipped galvanized per ASTM A123 and section 2.03.
H. Galvanizing repair paint: High zinc dust content paint for re-galvanizing welds in galvanized steel, 90 percent zinc dust by weight. Sherwin-Williams, Zinc Clad 5 or equivalent product approved prior to bid.
I. High-strength threaded fasteners: Heavy hexagon structural bolts and nuts, hardened washers; quenched and tempered medium-carbon steel bolts, nuts, and washers, complying with ASTM A325. Where indicated as galvanized, provide units that are hot-dip galvanized per ASTM A153.

2.02 FABRICATION

A. Fabricate structural steel in accordance with Section 1.23 "AISC" reference specifications.
B. No substitution of section or modification of detail shall be made except upon written approval of the Structural Engineer. Sections shall be full length pieces between connections or splices indicated on the drawings. No built-up lengths will be permitted. No warped or damaged sections shall be used.
C. Do bracing, blocking, cutting, fitting, drilling, tapping, welding, punching, etc., as may be required to complete work and to join work of others. Weld clip angles and plates to beams and punch holes for fastening work of other trades as shown on drawings.
E. Furnish all steel shown on structural drawings unless noted otherwise.

2.03 HOT-DIPPED GALVANIZED STEEL

A. All exposed steel including all fasteners, bolts, nuts, washers, etc. designated as galvanized on the drawings shall be hot-dipped galvanized per the following reference standards:

1. American Society for Testing and Materials (ASTM):
   A 123 / A 123M Zinc (Hot-Dip Galvanized) Coatings on Iron and Steel Products
   A 143 Practice for Safeguarding Against Embrittlement of Hot-Dip Galvanized Structural Steel Products and Procedure for Detecting Embrittlement.
   A 153 / A 153M Zinc Coating (Hot-Dip) on Iron and Steel Hardware
   A 384 Practice for Safeguarding Against Warpage and Distortion During Hot-Dip Galvanizing of Steel Assemblies
   A 385 Practice for Providing High-Quality Zinc Coatings (Hot-Dip)
   A 780 Repair of Damaged Hot-Dip Galvanized Coatings

B. Fabrication Requirements:

1. Fabricate structural steel in accordance with Class I, II, III guidelines as described in AGA's Recommended Details for Galvanized Structures.

2. Fabrication practices for products to be in accordance with the applicable portions of ASTM A 143, A 384, and A 385, except as specified herein. Avoid fabrication techniques that could cause steel distortion or embrittlement.
3. The Fabricator and Contractor shall notify the Engineer and hot-dip galvanizer regarding potential concerns, including handling issues, during the galvanizing process that may require design modification before fabrication proceeds.
4. Remove all welding slag, splatter, anti-splatter compounds and burrs prior to delivery.
5. Provide holes and/or lifting lugs to allow for handling during galvanizing.
6. Avoid unsuitable marking paints. Consult with the galvanizer about removal of grease, oil, paint and other deleterious material prior to fabrication.
7. Remove by blast-cleaning, or other methods, surface contaminants and coatings that are not removable by the normal chemical cleaning process in the galvanizing operation.
8. Surface Preparation: Pre-clean steel work in accordance with accepted methods to produce an acceptable surface for quality hot-dip galvanizing.

C. Coating Application

1. Galvanize steel members, fabrications and assemblies after fabrication by the hot-dip process in accordance with ASTM A 123 / 123M.
2. Galvanize bolts, nuts, washers and iron and steel hardware components in accordance with ASTM A 153 / 153M.
3. Safeguard products against steel embrittlement in conformance with ASTM A 143.
4. Handle all articles to be galvanized in such a manner as to avoid any mechanical damage and to minimize distortion.

D. Coating Requirements

1. Conform to paragraph 6.1 of ASTM A 123 / 123M, Table 1 of ASTM A 153 / 153M.
2. Surface Finish: Continuous, adherent, as smooth and evenly distributed as possible and free from any defect detrimental to the stated end use of the coated article.
3. Adhesion: Withstand normal handling consistent with the nature and thickness of the coating and normal use of the article.

E. Tests

1. Inspection and testing of hot-dip galvanized coatings shall be done under the guidelines provided in the AGA publication Inspection of Products Hot-dip Galvanized After Fabrication.
2. Include visual examination and tests in accordance with ASTM A123 / 123M, A 153 / 153M to determine the thickness of the zinc coating on the metal surface.
3. Furnish notarized Certificate of Compliance with ASTM standards and specifications herein listed. The Certificate must be signed by the galvanizer and contain a detailed description of the material processed. The Certificate shall include information as to the ASTM standard used for the coating.

F. Repair of Damaged Coating

1. The maximum area to be repaired is defined in accordance with ASTM A 123 / 123M, section 6.2, current edition.
2. The maximum area to be repaired in the field shall be determined in advance by mutual agreement between parties.
3. Repair areas damaged by welding, flame cutting or during handling, transport or erection by one of the approved methods in accordance with ASTM A 780 whenever damage exceeds 3/16” in width. Minimum thickness requirements for the repair are those described in ASTM A123 / 123M, Section 6.2, current edition.

3.01 ERECTION

A. Erect steel members to the tolerances outlined in the AISC Code of Standard Practice.
B. Provide temporary support of Structural Steel in accordance with AISC Code of Standard Practice and have temporary support in place until final support is constructed.
C. Contact surfaces shall be free from dirt, oil, loose scale, burrs, pits, paint and other defects that would prevent solid seating of parts.
D. Cutting of steel or enlargement of holes shall not be permitted without approval of the Structural Engineer.
E. Shim and level base plates and bearing plates to be grouted with steel shims or leveling nuts and washers.
F. Field welding shall conform to AISC 1.4.5 and is referenced AWS Specifications, except see Section 1.03 of these specifications for quality control. Do no welding below 0 degrees F. Pre-heat material to be welded and maintain interpass temperatures as required. All field welding shall be done by welders certified for the applicable welding position.
G. After the erection and welding of steel, apply a field touch-up coat of paint on all welded connections and damaged areas using the same color and type of paint used on the shop coat as necessary. Also remove clay, mud or other foreign materials from all members.
H. All welding of A615 rebar must be done per specific AWS D1.1 procedures for A615 rebar, including all pre-heat requirements.

END OF SECTION

07 57 00 - WATERPROOF DECK COATING

PART 1 - GENERAL

1.01 SECTION INCLUDES:

A. The Conditions of the Contract, Drawings and general provisions of contract, including General and Supplementary Conditions of Division 1 as indexed apply to this section.

B. The work covered in this section consists of furnishing all labor, materials, equipment, supervision and incidentals as necessary to install a waterproof deck-coating system on concrete top surfaces, including 6" up on walls and all vertical faces.

1.02 RELATED SECTIONS:

A. Section 03 74 00 – Concrete Repair

B. Section 07 92 00 – Sealant

1.03 QUALIFICATIONS:

A. The elastomeric coating is required to establish and maintain a continuous waterproof seal and not deteriorate excessively under normal weather conditions and for normal traffic in areas applied for the period of the warranty.

B. The manufacturer and applicator shall have a minimum of five (5) years experience specializing in the system, and the applicator shall be certified by the system manufacturer.

1.04 SUBMITTALS:

A. Submit the product name, manufacturer's specifications, installation and maintenance instructions, and applicator's certification, and complete summary of number of coats and coating thicknesses for each coating type to the Engineer for approval.

B. Provide a 4"x8" dry sample of fully cured exposed finish, stepped sample (multiple coat systems) in the colors selected by the engineer.

1.05 DELIVERY, STORAGE AND HANDLING:

A. Handle and store coating materials at the job site in such a manner as to prevent damage. Packaged materials shall be in original containers with seals unbroken and labels intact until time of use. Wrapped or bundled material shall bear the name of the manufacturer and the product. Damaged or otherwise unsuitable material, when so ascertained, shall be immediately removed from the job site.

1.06 WARRANTY:

A. Upon completion of this portion of the Work, and as a condition of its acceptance, deliver to the Owner and Engineer, copies of the Warranty signed by the coating manufacturer and the installing contractor as follows:

1. The coating manufacturer and the installing contractor shall be jointly and severally responsible to make immediate repairs as required for any coating failure due to defects in materials or workmanship for a period of five (5) years after the Date of Substantial Completion of the Work.
2. Repairs required within the stated period shall be provided without cost to the Owner.
3. This Warranty Agreement and the enforcement of its provisions shall not deprive the Owner of any action, right or remedy otherwise available to him.

PART 2 - PRODUCTS

2.01 GENERAL

A. Elastomeric Membrane Waterproofing: Provide a liquid elastomeric coating, multi component for application in multiple coats of types specified for areas indicated below. Top coat color to be selected by the University's representative and Engineer from the manufacturer's standard colors.

B. All deck-coating products shall be "low odor". All deck-coating component products shall be non-solvent-based and minimum 97% solids.

2.02 MATERIALS:

A. Approved systems and manufacturers:

1. MasterSeal Traffic 2500 (formerly Conipur II) Vehicular Traffic System by BASF (basis of specification).
2. Iso-Flex by Lymtal

B. Provide the following minimum wet film thicknesses:

<u>Type 1: Heavy Duty System</u>

Primer - MasterSeal P 255	-	4 mils
Base Coat - MasterSeal M 265	-	25 mils
Intermediate Coat – MasterSeal TC 275	-	20 mils
w/Aggregate 16-30 Mesh Silica Sand	-	broadcast to refusal
Topcoat - MasterSeal TC 275	-	20 mils
w/Aggregate 16-30 Mesh Silica Sand	-	broadcast and backrolled to encapsulate
Total	-	65 mils min. (not incl. primer)

<u>Type 2: Heavy Duty UV Stable System</u>

Primer - MasterSeal P 255	-	4 mils
Base Coat - MasterSeal M 265	-	25 mils
Intermediate Coat – MasterSeal TC 275	-	20 mils
w/Aggregate 16-30 Mesh Silica Sand	-	broadcast to refusal
Topcoat - MasterSeal TC 295	-	20 mils
w/Aggregate 16-30 Mesh Silica Sand	-	broadcast and backrolled to encapsulate
Total	-	65 mils min. (not incl. primer)

PART 3 - EXECUTION

3.01 INSPECTION

A. The installer must examine the areas and conditions under which work of this Section will be performed. Correct conditions detrimental to timely and proper completion of the Work. Do not proceed until unsatisfactory conditions are corrected.

B. The system manufacturer shall inspect and approve all surfaces prior to starting installation.

3.02 PREPARATION

A. Proceed with deck-coating work only after substrate construction and repair work have been completed, and all concrete patches and sealants have properly cured.

B. Follow the manufacturer's instructions for preparation of substrates (concrete, previous coatings and metal surface, etc) to receive waterproofing system. Remove existing coatings which are not fully adhered to concrete surface.

C. Clean substrate of dust, debris, and other substances detrimental to work. Shot blast or high-pressure water blast areas to receive waterproof traffic coating.
D. Apply solvent to existing deck coatings as recommended by manufacturer.
E. The sealing of random cracks, construction joints, control joints and cove sealants shall be performed prior to the application of waterproofing systems.
F. Mask off adjoining surfaces not to receive traffic topping, and close off roof and floor drains, to prevent spillage and migration of liquid materials outside membrane area.
G. Site Conditions: Ensure that area is well ventilated, or that workmen are properly equipped to work safely with products prior to installation.
H. Seal all doors and vents to buildings or tunnels with poly covering the entire opening.

3.05 INSTALLATION

A. Apply membrane liquids by spraying, roller coating, or distributing with notched squeegee to provide uniform thickness. Trowel heavy-bodied mixtures in place uniformly as recommended by manufacturer.
B. Start installation of deck covering in presence of manufacturer's technical representative where terms of warranty require inspection and acceptance of installation as it proceeds.
C. Apply total thickness of waterproof deck-coating in number of coats specified.
D. Weather Conditions: Proceed with installation when weather conditions are in compliance with manufacturer's recommended limitations.
E. All aggregate shall be encapsulated in top coat.

3.06 PROTECTION:

A. No pedestrian or vehicular traffic are permitted in the areas to receive application after and during application until surface has cured and has been approved for traffic by the applicator and the manufacturer.

END OF SECTION

07 92 00 - SEALANT

PART 1 - GENERAL

1.01 SECTION INCLUDES:

A. The Conditions of the Contract and Division 1 as indexed apply to this Section.

B. Work in this Section shall include, but not be limited to, furnishing all materials, labor and equipment necessary to remove existing sealant, prepare joints and install sealant for new and existing floor cracks, expansion and control joints (vertical and horizontal), and cove sealant, between similar and dissimilar materials (concrete, masonry, and metal), as indicated on the drawings. The work also includes protecting existing signage, structures, etc., inside the work zones, and protecting adjacent areas from damage during the removal and installation process.

1.02 RELATED WORK

A. Section 03 74 00 – Concrete Repair

B. Section 07 57 00 – Deck Coating

1.03 QUALITY ASSURANCE

A. Joint sealants are required to establish and maintain waterproof continuous seals on a permanent basis, within recognized limitations of wear and aging indicated for each application. The work shall be done by a Contractor with a minimum of five years experience and who has successfully completed at least five jobs of similar scope in the past five years.

1.04 SUBMITTALS

A. Submit the following:

1. Manufacturer's Literature: Materials description, MSDS, standard color charts and installation instructions.
2. Written certification that all sealant and primers are compatible with the concrete, patch materials, sealers and traffic deck coatings specified.

1.05 DELIVERY, STORAGE AND HANDLING

A. Handle and store sealant material at the job site in such a manner as to prevent damage. Packaged material shall be in original containers with seals unbroken and labels intact until time of use. Wrapped or bundled material shall bear the name of the manufacturer and the product. Damaged or otherwise unsuitable material, when so ascertained, shall be immediately removed from the job site.

1.06 WARRANTY

A. Upon completion of this portion of the Work, and as a condition of its acceptance, deliver to the Owner and Engineer, copies of the Warranty signed by the sealant manufacturer and the installing contractor as follows:

4. The sealant manufacturer and the installing contractor shall be jointly and severally responsible to make immediate repairs as required for any sealant failure due to defects in materials or workmanship for a period of three (3) years after the Date of Substantial Completion of the Work.
5. Repairs required within the stated period shall be provided without cost to the Owner.
6. This Warranty Agreement and the enforcement of its provisions shall not deprive the Owner of any action, right or remedy otherwise available to him.

PART 2 - PRODUCTS

2.01 ACCEPTABLE PRODUCTS

A. 1. Multi-Component Non-sag Polyurethane Sealant:
   1. SikaFlex-2C NS of SIKA
   2. Sonolastic NP2 of BASF
   3. or equivalent product submitted by bidder and approved by Engineer prior to bid.
   2. Multi-Component Self-Leveling Polyurethane Sealant:
   1. SikaFlex 2C SL of SIKA
   2. Sonolastic SL 2 of BASF
   3. or equivalent product submitted by bidder and approved by Engineer prior to bid.

B. Joint Primers: Provide the type recommended by the sealant manufacturer for the substrates indicated where required for proper sealant adhesion or as shown on the contract documents. All joints shall be primed.

C. Plastic Foam Joint Filler (Backer Rod): Flexible open cell or non-gassing closed cell polyethylene foam as recommended by the sealant manufacturer.

D. Bond Breaker Type: Polyethylene tape or other plastic tape as recommended by the sealant manufacturer for preventing sealant from adhering to surfaces which will result in the sealant joint failure.

E. Cleaners: Provide non staining, chemical cleaners of the type recommended by the sealant manufacturer. Cleaners shall not affect sealant bond or be harmful to adjacent materials.

PART 3 - EXECUTION

3.01 INSPECTION

A. The installer must examine the existing floor cracks, tee to tee joints, expansion and control joints, juncture of new concrete surface with old concrete surface, and all other locations in which sealant work is to be performed.

B. Notify the Engineer in writing of conditions detrimental to proper execution of work. Proceed with work only after all detrimental conditions are corrected.

3.02 PREPARATION

A. Existing sealant shall be removed without damaging the existing contact surface. Contractor is required to restore the contact surface to the original condition. Water-blasting is not allowed.

B. Clean the joint surfaces to bare concrete by sand-blasting, grinding, or other method. Remove all existing sealant. Sealant shall not be applied to joint surfaces previously treated with paint, lacquer, sealer, curing compound, water repellent or other coatings, unless coatings have been entirely removed. New sealant shall not be applied to surfaces with old sealant residue.

C. Prime surfaces in accordance with the instructions of the sealant manufacturer.
NOTE: Joint primer shall be required at all double tee-to-tee joints.

D. Install bond breakers in locations and of type recommended by the sealant manufacturer to prevent bond of sealant to surfaces where such bond might impair the performance of the sealant.

3.03 INSTALLATION

A. Install all materials in accordance with the manufacturer's instructions.
   1. Sealant shall not be installed below a temperature of 40° degrees F. unless specifically permitted in writing by the manufacturer.
   2. Install backer rod in joints as required. Use proper size so that installed backer rod is compressed 25% to 30% and face of backer rod is at proper depth. Do not twist or braid backer rod. Carefully roll rod stock into the joint without stretching.

3. Confine the sealant to the joints. Use masking tape to prevent staining of adjoining surfaces or spillage and migration of compound out of the joints. Tool surface to shape shown or, if none is shown, to flush or slightly concave surfaces. Remove excess compound and clean adjoining surfaces.

3.04 PROTECTION

A. Protect joint sealant during and after curing period from contact with debris and from damage resulting from construction operations or other causes so that they are without deterioration or damage at time of Substantial Completion. If damage or deterioration occurs, cut out and remove damaged or deteriorated joint sealant, and reseal joints with new material.

3.05 CLEANING

A. Clean off excess sealant adjacent to joints as work progresses by methods and cleaning materials approved by sealant manufacturers.

END OF SECTION

07 93 00 – EXPANSION JOINTS

PART 1 - GENERAL

1.01 SECTION INCLUDES

A. The Conditions of the Contract, Drawings and general provisions of contract, including General and Supplementary Conditions of Division 1 as indexed apply to this section.

B. Work in this Section shall include furnishing all materials, labor, equipment and incidentals necessary to install/replace existing expansion joints indicated on the drawing and specified herein.

1.02 RELATED WORK

A. Section 03 74 00 – Concrete Repair

B. Section 07 52 00 – Deck Coating

C. Section 07 92 00 – Sealant

1.03 QUALITY ASSURANCE

A. The expansion joints are required to establish and maintain continuous waterproof seals with adequate expansion capacity on a permanent basis, within recognized limitations of wear and aging.

B. The work shall be done by a Contractor with a minimum of five years experience in similar work.

1.04 SUBMITTALS

A. Expansion joint manufacturer's data sheet.

B. Detailed drawing indicating typical cross section, field verified actual joint width and joint size to be installed based on actual joint width and current ambient temperatures.

1.05 DELIVERY, STORAGE AND HANDLING

A. Handle and store joint material at the jobsite in such a manner as to prevent damage.

B. Packaged materials shall be in original containers with seals unbroken and labels intact until time of use. Wrapped or bundled material shall bear the name of the manufacturer and the product.

C. Damaged or otherwise unsuitable material, when so ascertained, shall be immediately removed from the jobsite.

1.06 WARRANTY

A. Upon completion of this portion of the Work, and as a condition of its acceptance, deliver to the Owner and Engineer, copies of the Warranty signed by the expansion joint manufacturer and the installing contractor as follows:

7. The joint manufacturer and the installing contractor shall be jointly and severally responsible to make immediate repairs as required for any joint failure due to defects in materials or workmanship for a period of three (3) years after the Date of Substantial Completion of the Work.
8. Repairs required within the stated period shall be provided without cost to the Owner.
9. This Warranty Agreement and the enforcement of its provisions shall not deprive the Owner of any action, right or remedy otherwise available to him.

PART 2 - PRODUCTS

2.01 SLAB EXPANSION JOINTS

A. Provide watertight expansion control system that is capable of accommodating multi-directional movement. System shall consist of preformed thermoplastic rubber profiles with integral side flanges typically cast into a preformed blockout by means of utilizing manufacturer's ambient cure elastomeric header.

The thermoplastic rubber seal element shall be sized to accommodate the total range of movement as specified at each joint location. Sizing shall be made in such a way as to ensure that the elastomeric membrane seal will remain under a degree of compression throughout the full movement cycle. Where required, provide seal that accepts pedestrian traffic. The contractor will provide evidence utilizing manufacturer's product data that the membrane seal will comply with this requirement.

B. Thermoplastic Rubber Joint Seals (Elastomeric Seal)

Provide seal profile as specified and indicated in the contract drawings. Profile design shall incorporate integral side flanges exhibiting a pronounced serrated profile and factory punched holes that interlocks the profile into the elastomeric header material. Gland shall be pedestrian-friendly type.

Install in the longest practical continuous length. Joint Seal Directional Changes - At all horizontal changes in direction provide seals with factory heat welded splices such as 90° corners, tees and crosses. The seal shall extend a minimum of 2'-0" in each direction from the factory splice.

Only straight, butt splice connections shall be allowed on the jobsite following manufacturers written instructions utilizing specialty heat fusing equipment or the manufacturer specialty-splicing adhesive.

All factory and field fused connections shall incorporate bonding of the complete seal profile. This includes fusing of all internal and external web configurations.

C. Elastomeric Header

Material shall be an ambient cure, 100% solids, two component polyurethane with pregraded aggregate mix exhibiting the physical properties listed in the tables below. When properly mixed and poured, the elastomeric concrete cures rapidly, flows and fills any voids, spalls or irregularities forming a monolithic unit.

Elastomeric cured binder shall meet the following physical properties:

PHYSICAL PROPERTIES	ASTM TEST METHOD	REQUIREMENT
Tensile Strength, min	D-638	750 psi
Ultimate Elongation, min	D-638	150%
Hardness, Shore D	D-2240	40 +/- 10
Compression Set, 22 hr at 158ºF, max	D-395, Method B	50%
Tear Resistance, min	D-624	80 pli
Water Absorption, max	D-570	3%
Heat Shrinkage	D-1299	1.6%

Elastomeric cured binder and aggregate shall meet the following physical properties:

PHYSICAL PROPERTIES	ASTM TEST METHOD	REQUIREMENT
Compressive Strength, min	D-695	2,200 psi
Resilience at 5% deflection, min	D-695	90%
Slant Sheer Bond Strength, min	N/A	250 psi

Impact Resistance		
at 32ºF (0ºC)	N/A	No Cracks
at –20ºF (-29ºC)		No Cracks
at 158ºF (70ºC)		No Cracks

D. Bonding Agent

Provide manufacturer's two component, 100 percent solids bonding agent and apply to the sides and base of the preformed blockouts prior to placement of elastomeric header. Store, mix and apply in accordance with manufacturer's system data sheet.

E. Accessories

Provide necessary and related parts including preformed or fabricated Wall Mount Plates with appropriate anchors and sealants where required for complete installation. Fabricated or preformed metal profiles shall be cut to length on jobsite where required. Plates shall be miter cut in the field to conform to directional changes unless otherwise contracted with expansion joint manufacturer.

F. ACCEPTABLE PRODUCTS

1. Wabocrete II Membrane ME-Series by Watson Bowman Acme Corp. / BASF
2. Iso-Flex Winged Expansion Joint Sealing System J-Series by Lymtal International
3. Winged Joint System CR-Series by Erie Metals
4. or equivalent product submitted by bidder and approved by Engineer prior to bid.

EXECUTION

3.01 INSPECTION

A. The joint installer must examine the existing condition of the joint material and field measure the joint width as required to determine the proper joint size.

3.02 SURFACE PREPARATION and INSTALLATION

A. Remove all existing joint materials. All foreign materials and debris which may be detrimental to effectively sealing the joint must be totally removed from the blockout surface by sandblasting.

B. Install expansion joint system in a neat and workmanlike manner following all manufacturer's instructions.

END OF SECTION

HART DISTRICT PARKING RAMP
CITY OF DULUTH
2016–2017 STRUCTURAL REHAB

2016 WORK SUMMARY

KEY NOTE	WORK ITEM	DESCRIPTION	UNIT	EST. QTY.
		LEVELS TWO, THREE, AND FOUR		
1.1	1.1	REMOVE AND REPLACE DOUBLE–TEE FLANGE–FULL DEPTH • REF. SECT. 037400 • REF. DETAIL 5/S8.	SF	1050
1.2	1.2	REMOVE AND REPLACE DOUBLE–TEE JOINT SEALANT • REF. SECT. 079200. • REF. DETAIL 1/S8. • INCLUDES SEALANT AT EDGES OF NEW FULL–DEPTH PATCHES.	LF	2000
1.3	1.3	REPAIR TEE–TO–TEE CONNECTIONS • REF. DETAIL 2/S8.	LOC.	60
1.4	1.4	REPLACE TEE–TO–TEE CONNECTION EMBED • REF. SECT. 055000. • REF. DETAIL 6/S8.	LOC.	30
	1.5	ALLOWANCE – HEAT • CONTRACTOR SHALL PROVIDE HEATED ENCLOSURES IF NECESSARY BASED ON AMBIENT TEMPERATURES AT TIME OF WORK PER ACI 306 AND NOTES ON THESE DOCUMENTS AND SHALL BE PAID BASED ON ACTUAL TIME AND MATERIALS FROM THIS ALLOWANCE.	LS	1
	1.6	ALLOWANCE – ELECTRICAL • SEE NOTE #2.	LS	1

NOTES:

1. THE CONTRACTOR SHALL COORDINATE ALL PHASING, WORK ZONES, AND TRAFFIC CONTROL WITH CITY'S PARKING MANAGER, INTERSTATE PARKING.
2. THE CONTRACTOR SHALL BE RESPONSIBLE FOR PROTECTING, TEMPORARILY SUPPORTING, AND PERMANENTLY OR TEMPORARILY RE–LOCATING EXISTING SURFACE–MOUNTED ELECTRICAL CONDUIT AS NEEDED TO COMPLETE THE REPAIRS. ALL ELECTRICAL WORK SHALL BE DONE BY A LICENSED ELECTRICAL CONTRACTOR AND SHALL BE PAID BASED ON ACTUAL TIME AND MATERIAL FROM ALLOWANCES 1.6 and 2.17.

COLD WEATHER CONCRETE NOTES:

The following requirements shall govern cold weather concrete construction:

1. Cold weather is defined as a period when for more than 3 successive days the mean daily temperature drops below 40°F.
2. not used.
3. All forms and reinforcing shall be kept free from frost.
4. The minimum temperature of fresh concrete when delivered at the site shall conform to the following:

Air Temperature (°F)	Minimum Concrete Temperature (°F)	
	For sections with least Dimension less than 12"	For sections with least Dimension 12" or greater
30 to 40	60	50
0 to 30	65	55
Below 0	70	60

5. The minimum temperature of fresh concrete, as placed during below normal temperatures (below 40°F) shall be 50°F.
6. When mean daily outdoor temperature is less than 40°F, all poured concrete shall be maintained in a moist condition at a temperature not less than 50°F for at least seven days (three days for high early strength concrete using Type III Portland Cement). When necessary, arrangements for heating, covering, insulating, or housing the concrete work shall be made in advance of placement. The arrangements shall be adequate to maintain the required temperature without injury due to concentration of heat. Combustion heaters shall not be used during the first 24 hours, unless precautions are taken to prevent exposure of concrete to exhaust gases which contain carbon dioxide.
7. Sufficient protection shall be provided to the concrete after removal of forms such that changes in temperature of the air immediately adjacent to the concrete during and immediately following the curing period are kept as uniform as possible. The rate of temperature change shall not exceed 5°F in any one hour or 40°F in any 24–hour period.
8. When concrete is poured during below normal temperatures (below 40 F), at least one extra test cylinder shall be made and kept adjacent to the related structure and cured and protected by the same methods used for the concrete in the structure. The cylinder shall be tested at 7 days and the results reported to the Engineer.
9. Calcium chloride shall not be used as an additive in concrete.

2017 WORK SUMMARY

KEY NOTE	WORK ITEM	DESCRIPTION	UNIT	EST. QTY.
		LEVEL ONE		
2.1	2.1	REMOVE AND REPLACE DOUBLE–TEE FLANGE–FULL DEPTH • REF. SECT. 037400 • REF. DETAIL 5/S8.	SF	200
2.2	2.2	REMOVE AND REPLACE DOUBLE–TEE JOINT SEALANT • REF. SECT. 079200. • REF. DETAIL 1/S8.	LF	330
2.3	2.3	REPAIR TEE–TO–TEE CONNECTIONS • REF. DETAIL 2/S8.	LOC.	12
2.4	2.4	REPLACE TEE–TO–TEE CONNECTION EMBED • REF. SECT. 055000. • REF. DETAIL 6/S8.	LOC.	6
2.5	2.5	REMOVE AND REPLACE CONTROL JOINT SEALANT JOINTS AT CROSSOVERS. • REF. SECT. 079300.	LF	150
2.6	2.6	WATERPROOF DECK–COATING – TYPE I – HEAVY DUTY • REF. SECT. 075700 • REMOVE ALL EXISTING DELAMINATED COATING, TRAFFIC STRIPES AND MARKINGS, AND OIL SPOTS. • EXTEND COATING UP FACE OF COLUMNS 4" TYP. U.N.O.	SF	1000
2.10	2.10	REMOVE AND REPLACE EXPANSION JOINT–BETWEEN DOUBLE–TEES AND SLAB–ON–GRADE • REF. SECT. 079300 • REF. DETAIL 7/S8. • REMOVE EXISTING WING FLANGE JOINT ENTIRELY. • SAW–CUT AND CHIP OUT NEW BLOCK–OUT AS REQUIRED. • FULL DEPTH REPAIRS IF REQUIRED ALONG JOINT EDGE SHALL BE PER WORK ITEM 2.15. • INSTALL NEW EXPANSION JOINT. • BUTT GLAND AND HEADER MATERIAL TO COLUMN FACE AT ENDS. APPLY COVE SEALANT BETWEEN EXPANSION JOINT AND COLUMN VERTICAL FACE FULL WIDTH OF JOINT.	LF	56
2.12	2.12	NEW EXPANSION JOINT–BETWEEN DOUBLE–TEES AND SLAB–ON–GRADE • REF. SECT. 079300 • REF. DETAIL 7/S8. • SAW–CUT AND CHIP OUT NEW BLOCK–OUT IN SLAB–ON–GRADE AS REQUIRED. • INSTALL NEW EXPANSION JOINT. • BUTT GLAND AND HEADER MATERIAL TO COLUMN FACE AT ENDS. APPLY COVE SEALANT BETWEEN EXPANSION JOINT AND COLUMN VERTICAL FACE FULL WIDTH OF JOINT.	LF	18
2.13	2.13	DOUBLE–TEE STEM REPAIR • REF. SECT. 037400. • REF. DETAIL 8/S8.	Loc.	1
		LEVELS TWO and THREE		
2.5	2.5	REMOVE AND REPLACE CONTROL JOINT SEALANT JOINTS AT CROSSOVERS. • REF. SECT. 079300.	LF	600
2.6	2.6	WATERPROOF DECK–COATING – TYPE I – HEAVY DUTY • REF. SECT. 075700 • REMOVE ALL EXISTING DELAMINATED COATING, TRAFFIC STRIPES AND MARKINGS, AND OIL SPOTS. • EXTEND COATING UP FACE OF COLUMNS 4" TYP. U.N.O.	SF	4000
		LEVEL FOUR		
2.5	2.5	REMOVE AND REPLACE CONTROL JOINT SEALANT JOINTS AT CROSSOVERS. • REF. SECT. 079300.	LF	300
2.6A	2.6A	WATERPROOF DECK–COATING – TYPE II – HEAVY DUTY UV STABLE SYSTEM • REF. SECT. 075700 • REMOVE ALL EXISTING DELAMINATED COATING, TRAFFIC STRIPES AND MARKINGS, AND OIL SPOTS. • EXTEND COATING UP FACE OF COLUMNS 4" TYP. U.N.O.	SF	5000

KEY NOTE	WORK ITEM	DESCRIPTION	UNIT	EST. QTY.
		STREET LEVEL		
2.7	2.7	PARTIAL DEPTH CONCRETE PATCH – VERTICAL COLUMN OR WALL FACE • REF. SECT. 037400.	SF	10
2.8	2.8	OVERHEAD BEAM LEDGE REPAIR • REF. SECT. 037400. • REF. DETAIL 9/S8	SF	20
2.16	2.16	ADD SUPPLEMENTAL TEE–STEM BRACKET • REF. SECT. 055000. • REF. DETAILS 9/S8 FOR CASE 1 AND CASE 2	LOC.	3
		FIRST STREET ENTRANCE–EXIT BRIDGE		
2.1	2.1	REMOVE AND REPLACE DOUBLE–TEE FLANGE–FULL DEPTH • REF. SECT. 037400 • REF. DETAIL 5/S8	SF	300
2.2	2.2	REMOVE AND REPLACE DOUBLE–TEE JOINT SEALANT • REF. SECT. 079200. • REF. DETAIL 1/S8.	LF	100
2.3	2.3	REPAIR TEE–TO–TEE CONNECTIONS • REF. DETAIL 2/S8.	LOC.	12
2.4	2.4	REPLACE TEE–TO–TEE CONNECTION EMBED • REF. SECT. 055000. • REF. DETAIL 6/S8.	LOC.	12
2.9	2.9	REMOVE AND REPLACE CONCRETE APRON AND SIDEWALK – FIRST STREET ENTRANCE–EXIT • REF. SECT. 037400. • REMOVE EXISTING 6" THICK CONCRETE SLAB–ON–GRADE APRON ENTIRELY. • SURFACE COMPACT EXISTING SUB–GRADE MATERIAL. ADD ONE 3" LIFT OF MNDOT CLASS V SUB–BASE MATERIAL. • POUR NEW 5" THICK SLAB–ON–GRADE APRON W/#5 EPOXY–COATED BARS @12"o.cv. EACH WAY AT MID–DEPTH OF SLAB. • 1/4" ETHAFOAM BOND–BREAKER ALL AROUND. • REPLACE CURB ON APRON IN SAME CONFIGURATION AND DIMENSIONS AS EXISTING (INCLUDED IN THIS WORK ITEM). • TOP OF APRON TO SLOPE FROM TOP OF EXISTING SIDEWALK ELEVATION TO TOP OF DOUBLE–TEE ELEVATION. • HEAVY TRANSVERSE BROOM FINISH. • SAW–CUT CONTROL JOINTS AS SHOWN. FILL JOINTS WITH SEALANT. • PROVIDE 1" SEALANT JOINT BETWEEN NEW APRON AND DOUBLE–TEE EDGE.	SF	175
2.14	2.14	REMOVE AND REPLACE EXPANSION JOINT–VEHICLE BRIDGE • REF. SECT. 079300 • REF. DETAIL 7/S8. • REMOVE EXISTING ADHERED GLANDULAR JOINT ENTIRELY. • SAW–CUT AND CHIP OUT NEW BLOCK–OUT AS REQUIRED. • FULL DEPTH REPAIRS IF REQUIRED ALONG JOINT EDGE SHALL BE PER WORK ITEM 2.15. • INSTALL NEW EXPANSION JOINT. • TURN WING FLANGE UPWARD AT FACE OF WALL AND FASTEN WITH 1/4"X2" WIDE ALUMINUM TERM. BAR W/STAINLESS STEEL DRIVE–PIN ANCHORS @ 16"o.c. TYP. PER MANUFACTURER'S TYPICAL DETAIL.	LF	48
2.15	2.15	REPAIR SLAB EDGE AND BLOCK–OUT AT EXPANSION JOINT • REF. SECT. 037400. • REF. DETAIL 7/S8.	SF	50
	2.17	ALLOWANCE – ELECTRICAL • SEE NOTE #2.	LS	1

REVISION DESCRIPTION	DATE

DATE	10–5–16
DRAWN	MD
CHECKED	MD

I HEREBY CERTIFY THAT THIS PLAN, SPECIFICATION OR REPORT WAS PREPARED BY ME OR UNDER MY DIRECT SUPERVISION AND THAT I AM A REGISTERED PROFESSIONAL ENGINEER UNDER THE LAWS OF THE STATE OF MINNESOTA. DATE 10–5–16
26604 REG. NO. SIGNATURE

CITY OF DULUTH
HART DISTRICT PARKING RAMP
115 EAST SUPERIOR STREET
DULUTH, MINNESOTA

HART DISTRICT PARKING RAMP
2016–2017 STRUCTURAL REHAB

PALANISAMI & ASSOC., INC.
CONSULTING ENGINEERS
5661 International Parkway
Minnetonka, Minnesota 55343
P: 763–533–0403 | F: 763–533–9586
Duluth Office
308 W. Superior Street, Suite 604
Duluth, MN 55802
P: 218 727–7534

PAI JOB NUMBER:
16142

SHEET NUMBER
S1

Copyright © 2010 By Palanisami & Assoc., Inc.

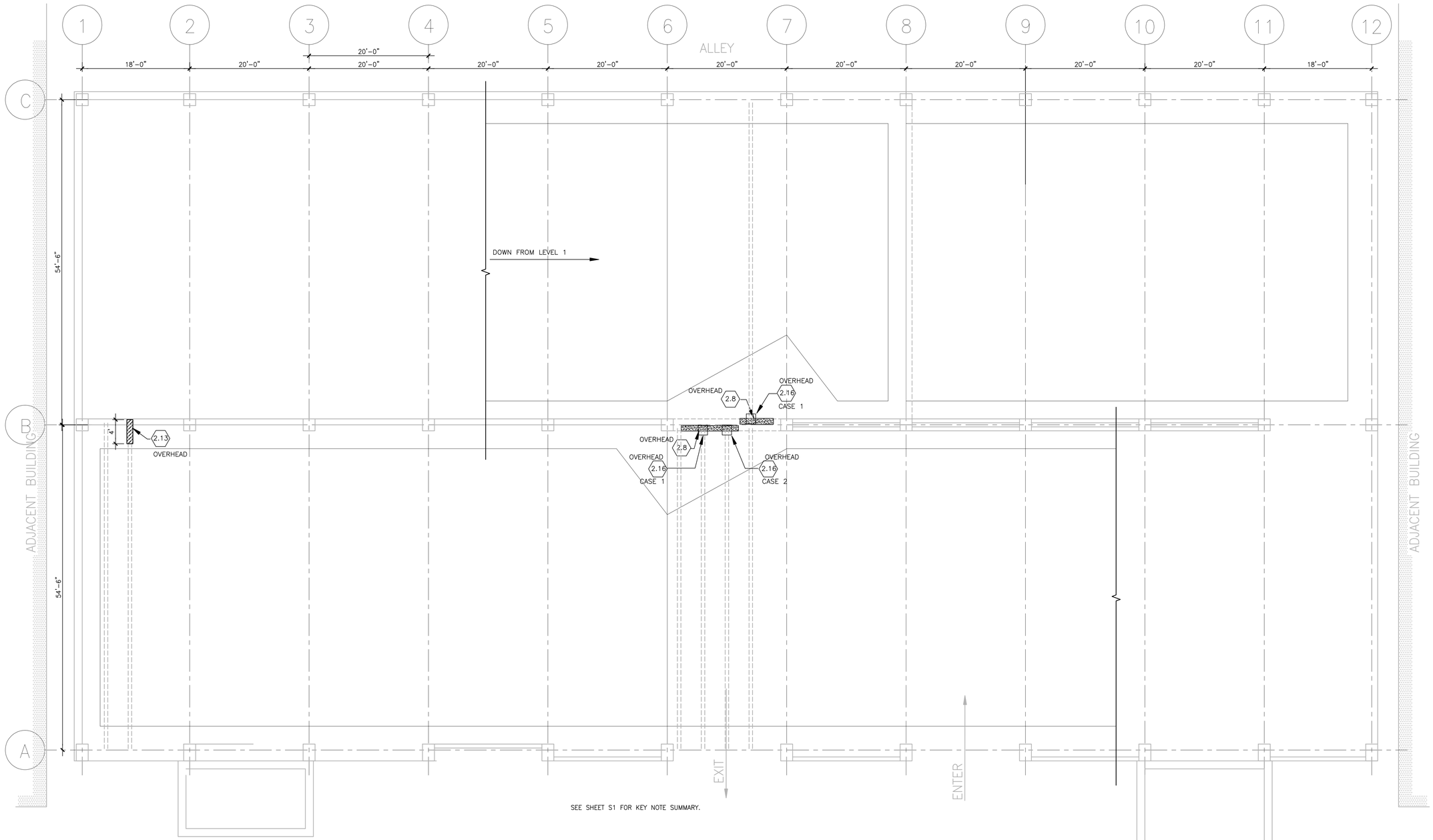

STREET LEVEL
NO SCALE

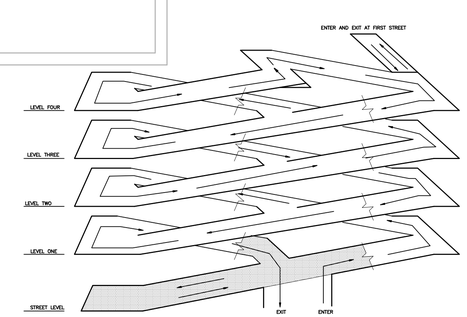

EXPANDED VIEW

REVISION	DESCRIPTION	DATE

DATE	10-5-16
DRAWN	MD
CHECKED	MD

I HEREBY CERTIFY THAT THIS PLAN, SPECIFICATION OR REPORT WAS PREPARED BY ME OR UNDER MY DIRECT SUPERVISION AND THAT I AM A REGISTERED PROFESSIONAL ENGINEER UNDER THE LAWS OF THE STATE OF MINNESOTA.
DATE 10-5-16
26604
REG. NO. SIGNATURE

CITY OF DULUTH
HART DISTRICT PARKING RAMP
115 EAST SUPERIOR STREET
DULUTH, MINNESOTA

HART DISTRICT PARKING RAMP
2016-2017 STRUCTURAL REHAB

PALANISAMI & ASSOC., INC.
CONSULTING ENGINEERS
5661 International Parkway
Minnetonka, Minnesota 55343
P: 763-533-9403 | F: 763-533-9586
306 W. Superior Street, Suite 604
Duluth, MN 55802
P: 218 720-7534

PAI JOB NUMBER:
16142

SHEET NUMBER
S2

Copyright © 2010 By Palanisami & Assoc., Inc.

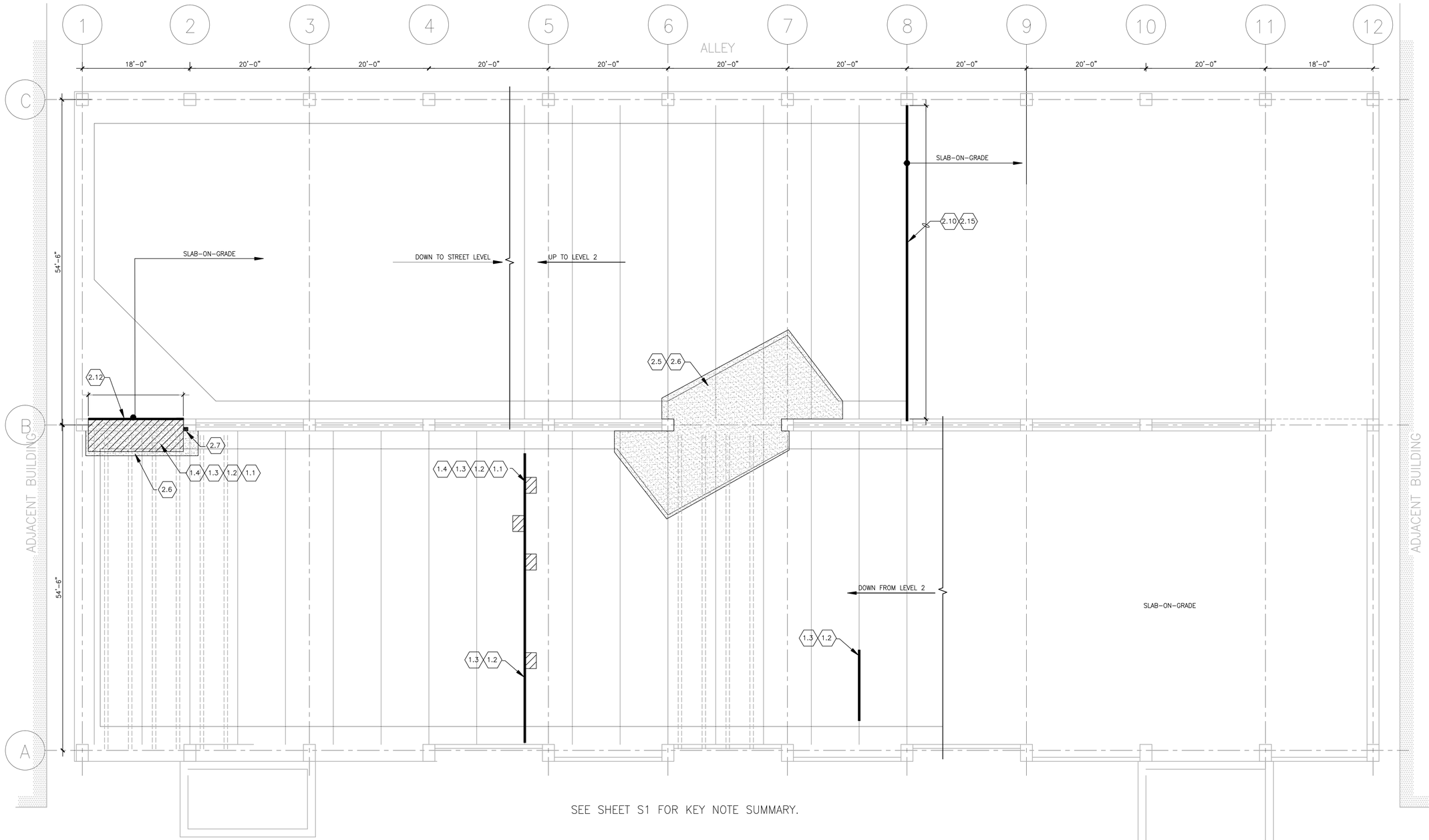

FIRST LEVEL
NO SCALE

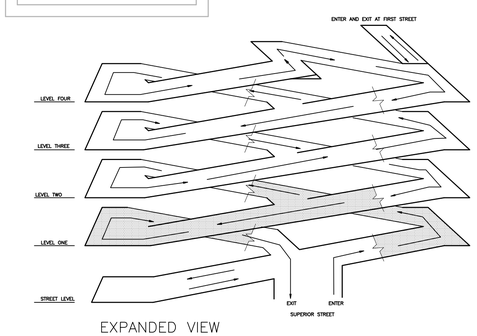

EXPANDED VIEW

REVISION DESCRIPTION	DATE

DATE	10-5-16
DRAWN	MD
CHECKED	MD

I HEREBY CERTIFY THAT THIS PLAN, SPECIFICATION OR REPORT WAS PREPARED BY ME OR UNDER MY DIRECT SUPERVISION AND THAT I AM A REGISTERED PROFESSIONAL ENGINEER UNDER THE LAWS OF THE STATE OF MINNESOTA. DATE 10-5-16
REG. NO. 26604 SIGNATURE

CITY OF DULUTH
HART DISTRICT PARKING RAMP
115 EAST SUPERIOR STREET
DULUTH, MINNESOTA

HART DISTRICT PARKING RAMP
2016-2017 STRUCTURAL REHAB

PALANISAMI & ASSOC., INC.
CONSULTING ENGINEERS
5661 International Parkway
Minnetonka, Minnesota 55343
P: 763-533-9403 | F: 763-533-9586
Superior Street
306 W. Superior Street, Suite 604
Duluth, MN 55802
P: 218 720-7304

PAI JOB NUMBER:
16142

SHEET NUMBER
S3

Copyright © 2010 By Palanisami & Assoc., Inc.

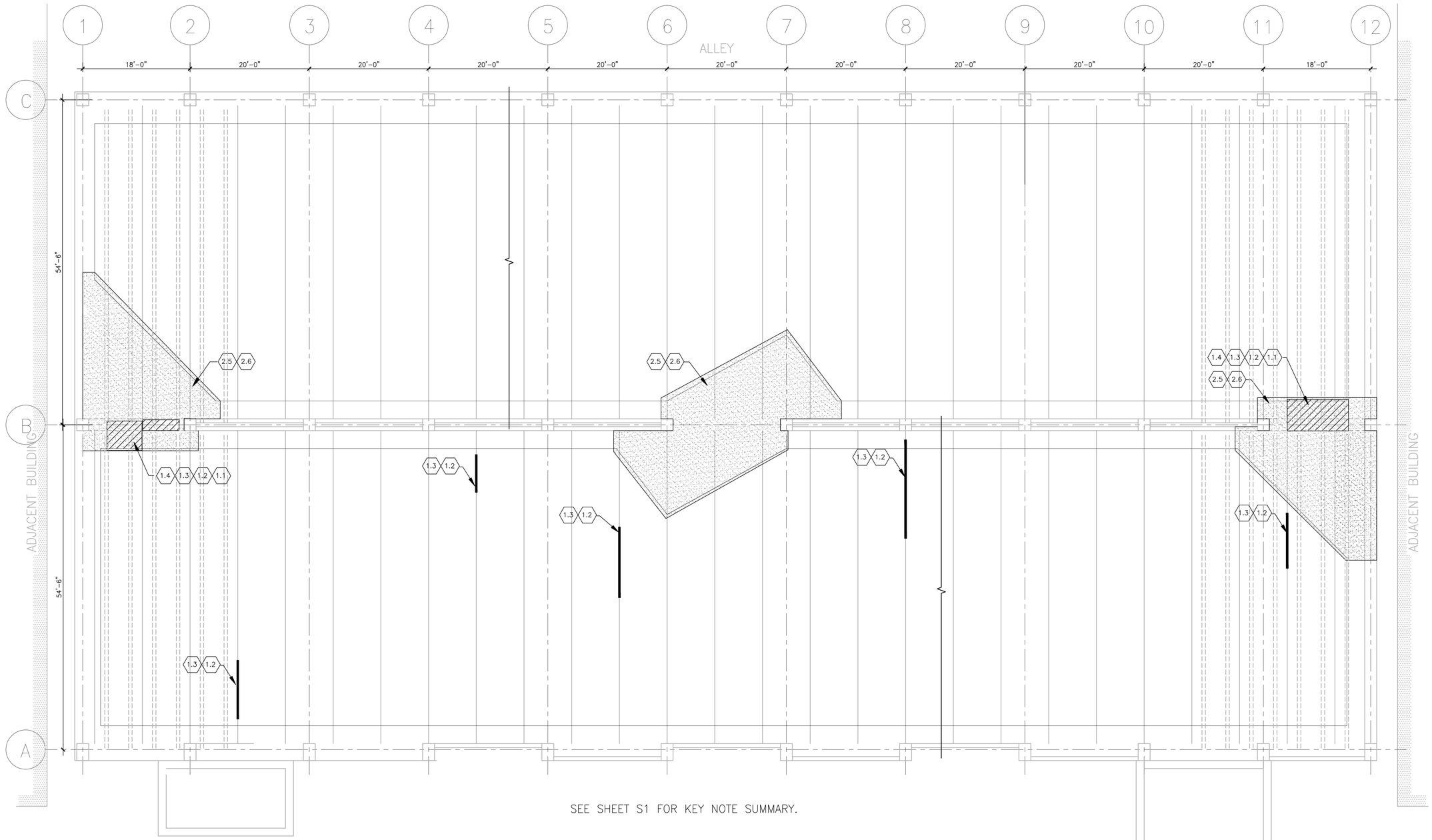

SEE SHEET S1 FOR KEY NOTE SUMMARY.

SECOND LEVEL

NO SCALE

PLAN NORTH

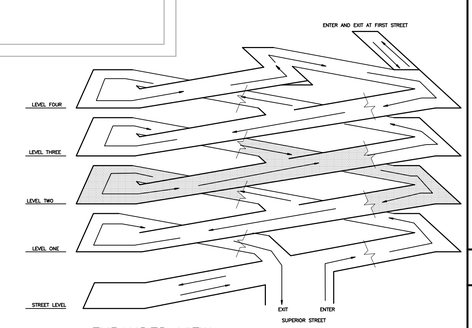

EXPANDED VIEW

REVISION	DESCRIPTION	DATE

DATE	10-5-16	
DRAWN	MD	
CHECKED	MD	

I HEREBY CERTIFY THAT THIS PLAN, SPECIFICATION OR REPORT WAS PREPARED BY ME OR UNDER MY DIRECT SUPERVISION AND THAT I AM A REGISTERED PROFESSIONAL ENGINEER UNDER THE LAWS OF THE STATE OF MINNESOTA. DATE 10-5-16

26604 REG. NO. SIGNATURE

CITY OF DULUTH
HART DISTRICT PARKING RAMP
115 EAST SUPERIOR STREET
DULUTH, MINNESOTA

HART DISTRICT PARKING RAMP
2016-2017 STRUCTURAL REHAB

PALANISAMI & ASSOC., INC.
CONSULTING ENGINEERS
5661 International Parkway
Minnetonka, Minnesota 55343
P: 763-533-9403 | F: 763-533-9586
306 W. Superior Street, Suite 604
Duluth, MN 55802
P: 218 720-7354

PAI JOB NUMBER:
16142

SHEET NUMBER
S4

Copyright © 2010 By Palanisami & Assoc., Inc.

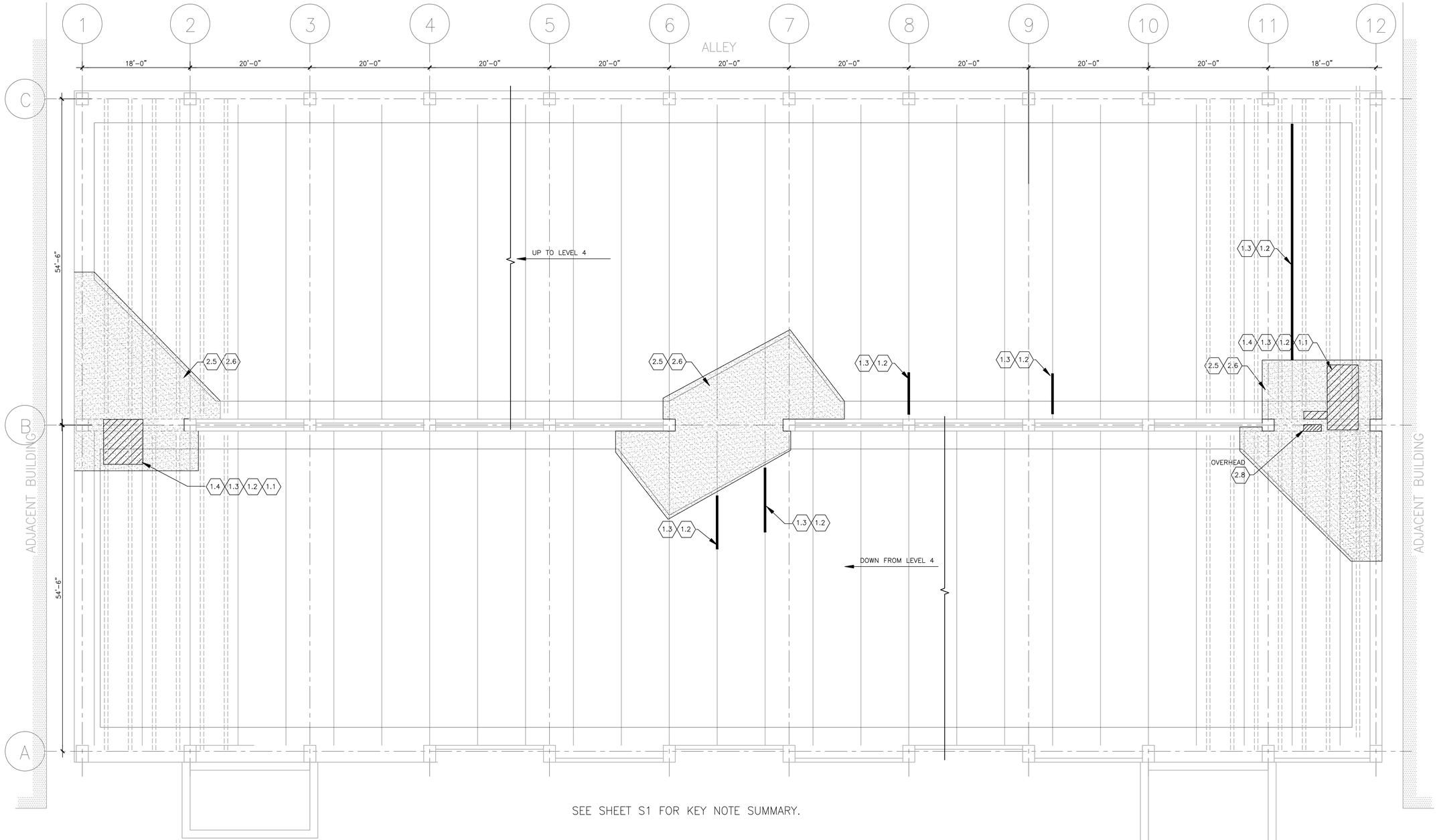

SEE SHEET S1 FOR KEY NOTE SUMMARY.

THIRD LEVEL

NO SCALE

PLAN NORTH

EAST SUPERIOR STREET

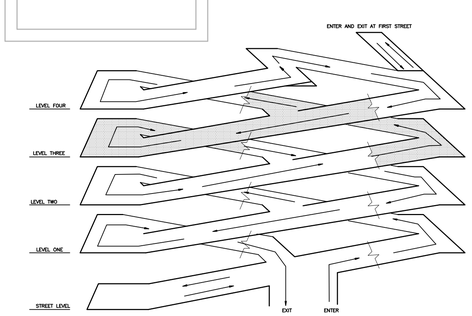

EXPANDED VIEW

REVISION	DESCRIPTION	DATE

DATE	10-5-16	
DRAWN	MD	
CHECKED	MD	

I HEREBY CERTIFY THAT THIS PLAN, SPECIFICATION OR REPORT WAS PREPARED BY ME OR UNDER MY DIRECT SUPERVISION AND THAT I AM A REGISTERED PROFESSIONAL ENGINEER UNDER THE LAWS OF THE STATE OF MINNESOTA. DATE 10-5-16

26604 REG. NO. SIGNATURE

CITY OF DULUTH
HART DISTRICT PARKING RAMP
115 EAST SUPERIOR STREET
DULUTH, MINNESOTA

HART DISTRICT PARKING RAMP
2016-2017 STRUCTURAL REHAB

PALANISAMI & ASSOC., INC.
CONSULTING ENGINEERS
5661 International Parkway
Minnetonka, Minnesota 55343
P: 763-533-9403 | F: 763-533-9586
306 W. Superior Street, Suite 604
Duluth, MN 55802
P: 218 920-7304

PAI JOB NUMBER:
16142

SHEET NUMBER
S5

Copyright © 2010 By Palanisami & Assoc., Inc.

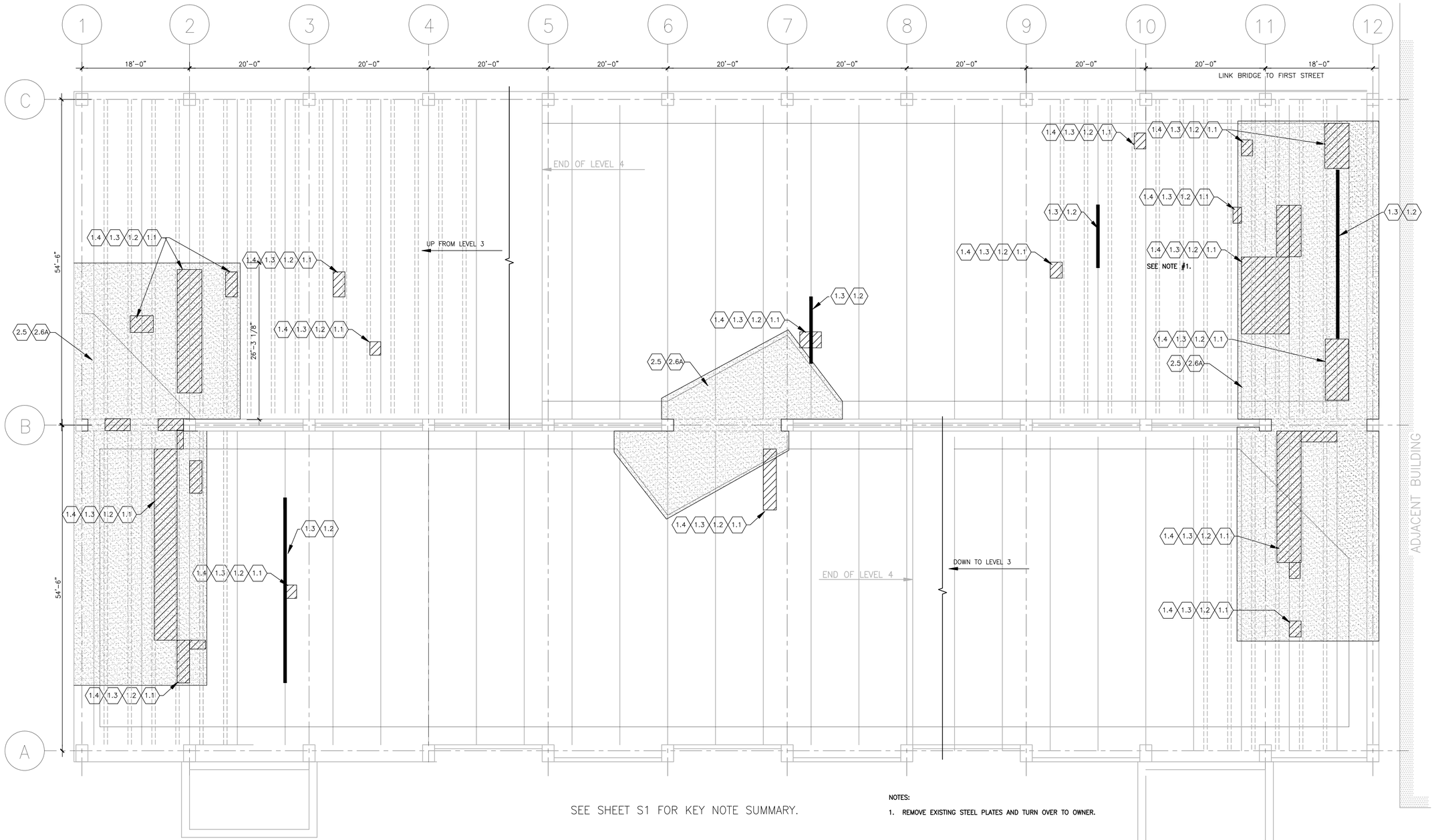

SEE SHEET S1 FOR KEY NOTE SUMMARY.

NOTES:

1. REMOVE EXISTING STEEL PLATES AND TURN OVER TO OWNER.

FOURTH (TOP) LEVEL

NO SCALE

PLAN NORTH

EAST SUPERIOR STREET

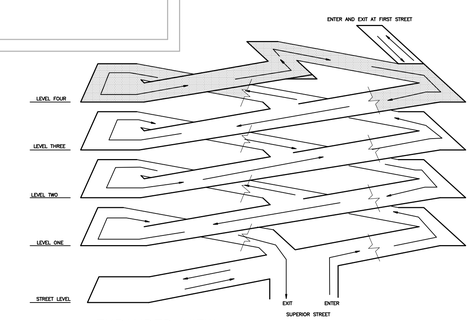

EXPANDED VIEW

REVISION DESCRIPTION	DATE

DATE	10-5-16
DRAWN	MD
CHECKED	MD

I HEREBY CERTIFY THAT THIS PLAN, SPECIFICATION OR REPORT WAS PREPARED BY ME OR UNDER MY DIRECT SUPERVISION AND THAT I AM A REGISTERED PROFESSIONAL ENGINEER UNDER THE LAWS OF THE STATE OF MINNESOTA. DATE 10-5-16

26604 REG. NO. SIGNATURE

CITY OF DULUTH
HART DISTRICT PARKING RAMP
115 EAST SUPERIOR STREET
DULUTH, MINNESOTA

HART DISTRICT PARKING RAMP
2016-2017 STRUCTURAL REHAB

PALANISAMI & ASSOC., INC.
CONSULTING ENGINEERS
5661 International Parkway
Minnetonka, Minnesota 55343
P: 763-533-9403 | F: 763-533-9586
www.palanisami.com
306 W. Superior Street, Suite 604
Duluth, MN 55802
P: 218 720-7354

PAI JOB NUMBER:
16142

SHEET NUMBER
S6

Copyright © 2010 By Palanisami & Assoc., Inc.

NOTES:

1. PROTECT EXISTING CONDUIT BELOW. TEMPORARILY SUPPORT CONDUITS DURING CONSTRUCTION. PROVIDE NEW PERMANENT CONDUIT HANGERS OF SAME TYPE AND CONFIGURATION AS EXISTING.
2. REMOVAL AND RE-INSTALLATION OF EMBEDDED GATE CONTROL LOOPS IS NOT IN CONTRACT AND SHALL BE BY CITY'S PARKING EQUIPMENT PROVIDER. CONTRACTOR SHALL COORDINATE WITH INTERSTATE PARKING FOR RE-INSTALLATION OF LOOPS.
3. PROTECT ALL CURBS, SIDEWALKS, STEEL SIGN-HEADROON CLEARANCE BAR POSTS, PARKING EQUIPMENT AND GATES, J-BARRIER, AND ADJACENT PROPERTIES THROUGHOUT THE WORK.

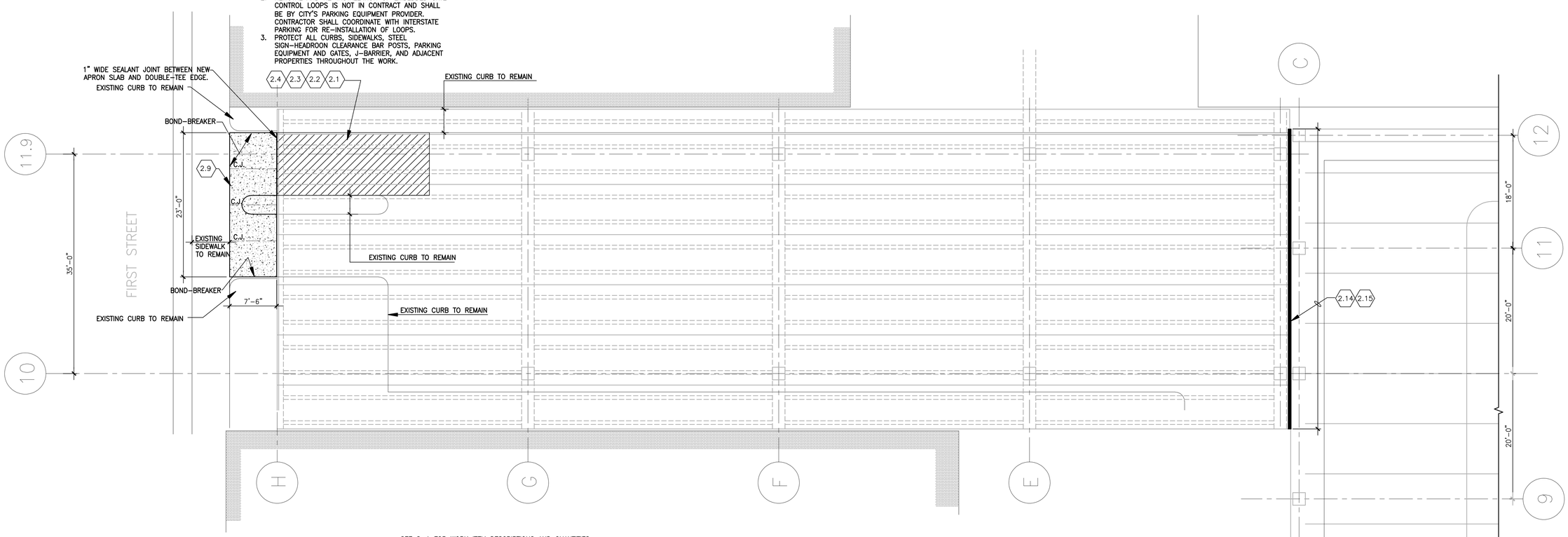

SEE S-1 FOR WORK ITEM DESCRIPTIONS AND QUANTITIES.

LINK BRIDGE to FIRST STREET PLAN

NO SCALE

PLAN NORTH

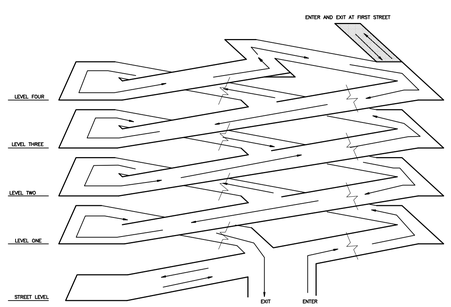

EXPANDED VIEW

REVISION	DESCRIPTION	DATE

DATE	10-5-16	
DRAWN	MD	
CHECKED	MD	

I HEREBY CERTIFY THAT THIS PLAN, SPECIFICATION OR REPORT WAS PREPARED BY ME OR UNDER MY DIRECT SUPERVISION AND THAT I AM A REGISTERED PROFESSIONAL ENGINEER UNDER THE LAWS OF THE STATE OF MINNESOTA. DATE 10-5-16

26604 REG. NO. SIGNATURE

CITY OF DULUTH
HART DISTRICT PARKING RAMP
115 EAST SUPERIOR STREET
DULUTH, MINNESOTA

HART DISTRICT PARKING RAMP
2016-2017 STRUCTURAL REHAB

PALANISAMI & ASSOC., INC.
CONSULTING ENGINEERS
5461 International Parkway
Minnetonka, Minnesota 55343
P: 763-533-9403 | F: 763-533-9586
Superior Street Gym
306 W. Superior Street, Suite 604
Duluth, MN 55802
P: 218-302-2534

PAI JOB NUMBER:
16142

SHEET NUMBER
S7

Copyright © 2010 By Palanisami & Assoc., Inc.

1. REMOVE EXISTING JOINT SEALANT.
2. PREPARE JOINT SURFACE BY GRINDING, SANDBLASTING OR OTHER METHOD TO BARE CONCRETE. REMOVE ALL EXISTING SEALANT RESIDUE FROM JOINT SURFACE.
3. REMOVE ALL DUST AND DEBRIS FROM JOINT.
4. INSTALL BACKER ROD IN JOINT.
5. APPLY PRIMER TO JOINT SURFACE. ALL JOINTS MUST BE PRIMED.
5. INSTALL BOND-BREAKER TAPE AT ALL FLANGE-TO-FLANGE CONNECTIONS.
5. INSTALL NEW SEALANT EVENLY AND RECESSED.
6. DO NOT OVERFILL JOINT.

AT LOCATIONS WHERE TEE FLANGES ARE SPALLED AT EDGE:

1. REMOVE ALL SPALLED CONCRETE TO SOUND SURFACE.
2. SAW-CUT 1/2" DEEP AT EDGE OF SPALL.
3. FILL SPALLED AREA WITH SEALANT.
4. SEE 1/S-7 FOR TYPICAL NOTES.
5. THIS CONDITION SHALL BE INCLUDED IN UNIT PRICE FOR WORK ITEM 1.1. THE BIDDER SHALL VISIT THE SITE AND ASSESS THE CONDITION PRIOR TO THE BID. NO ADDED COST SHALL BE INCURRED TO THE OWNER FOR THIS CONDITION AFTER THE BID.

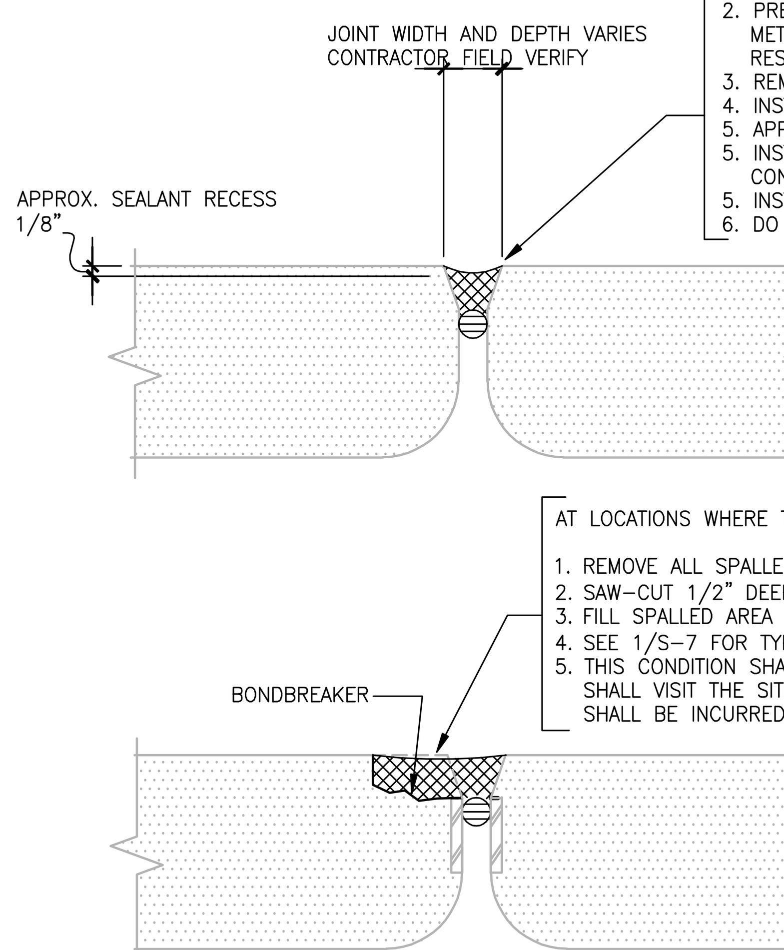

1/S8 TEE FLANGE-TO-FLANGE JOINT SEALANT
SCALE: none
AT NEW PATCHES

AT LOCATIONS WHERE EXISTING FLANGE-to-FLANGE CONNECTION WELDS ARE BROKEN:

1. SANDBLAST or GRIND EXISTING STEEL TO REMOVE SURFACE CORROSION.
2. INSTALL NEW STEEL SLUG MINIMUM 3" LONG IF REQUIRED.
3. WELD NEW OR EXISTING SLUG TO EMBED PLATES.
4. COAT NEW WELDS, PLATES AND SLUG WITH SPECIFIED BAR COATING.
4. SEAL JOINT PER DETAILS 1/S7, 1A/S7.

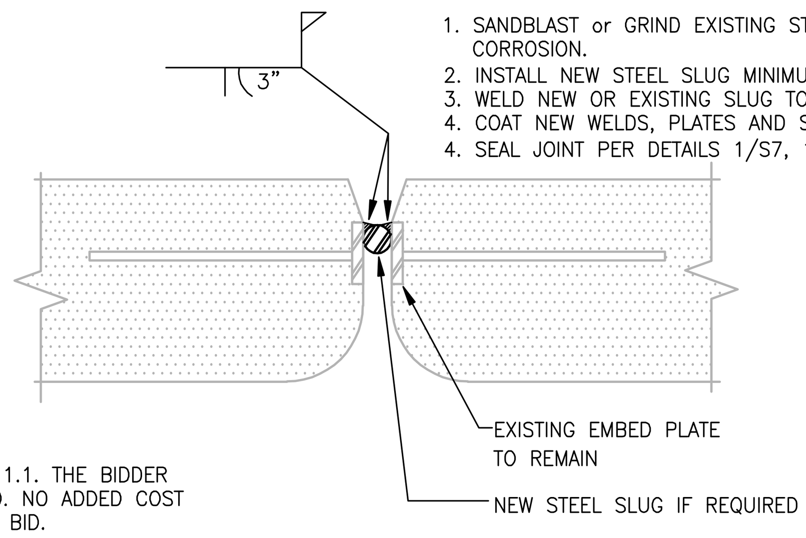

2/S8 TEE FLANGE-TO-FLANGE CONNECTION REPAIR
SCALE: N.T.S.

CONSTRUCTION SEQUENCE:

1. SHORE ALL DOUBLE-TEE STEMS BEARING ON BEAM LEDGE.
2. FIELD VERIFY THE DETERIORATED AREA. CHIP AND REMOVE ALL DELAMINATED CONCRETE FULL LENGTH OF BEAM UNDERSIDE AND LEDGE TO SOUND CONCRETE.
3. SANDBLAST ALL EXPOSED EXISTING REBAR, EMBEDDED STEEL SHAPES AND CONCRETE. CUT AND REMOVE ALL LONGITUDINAL BARS AND ANY EXISTING REBAR CORRODED BEYOND 20% OF AREA.
4. INSTALL NEW EPOXY-COATED REBAR IF NECESSARY.
5. INSTALL TAPCON SCREWS.
6. FORM and POUR NEW CONCRETE LEDGE.
7. REMOVE SHORING.

NOTE: ALL NEW REBAR SHALL BE EPOXY-COATED.

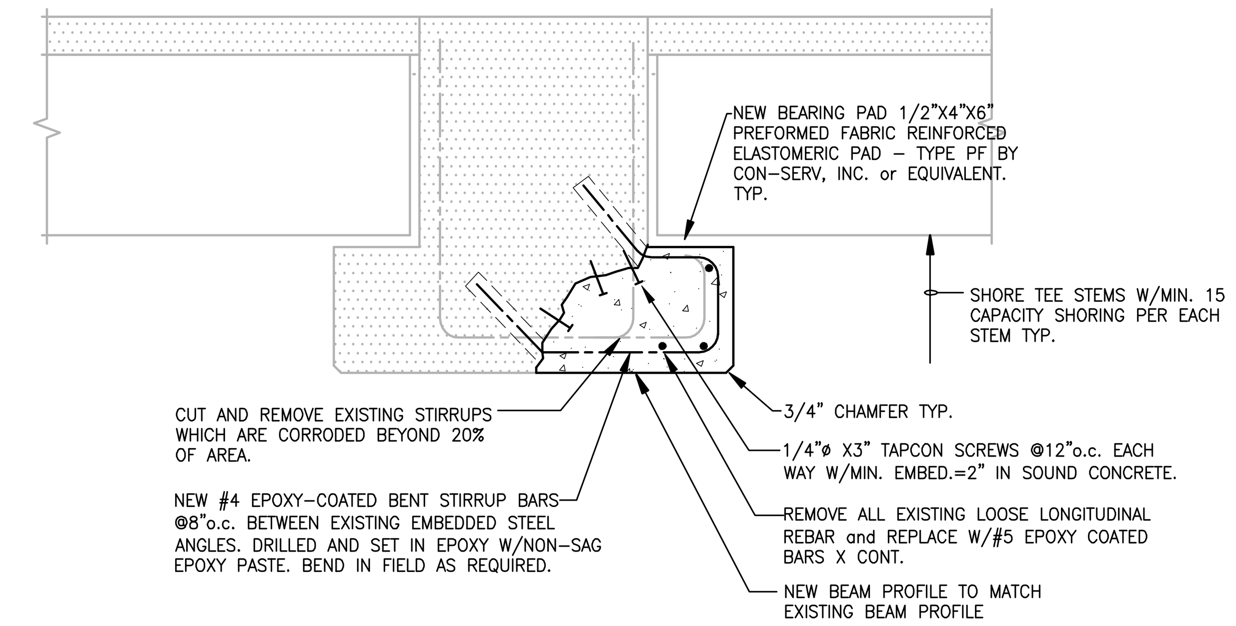

PAINT NEW CONCRETE PER SECT. 099900.

9/S8 SECTION – BEAM LEDGE REPAIR
SCALE: none

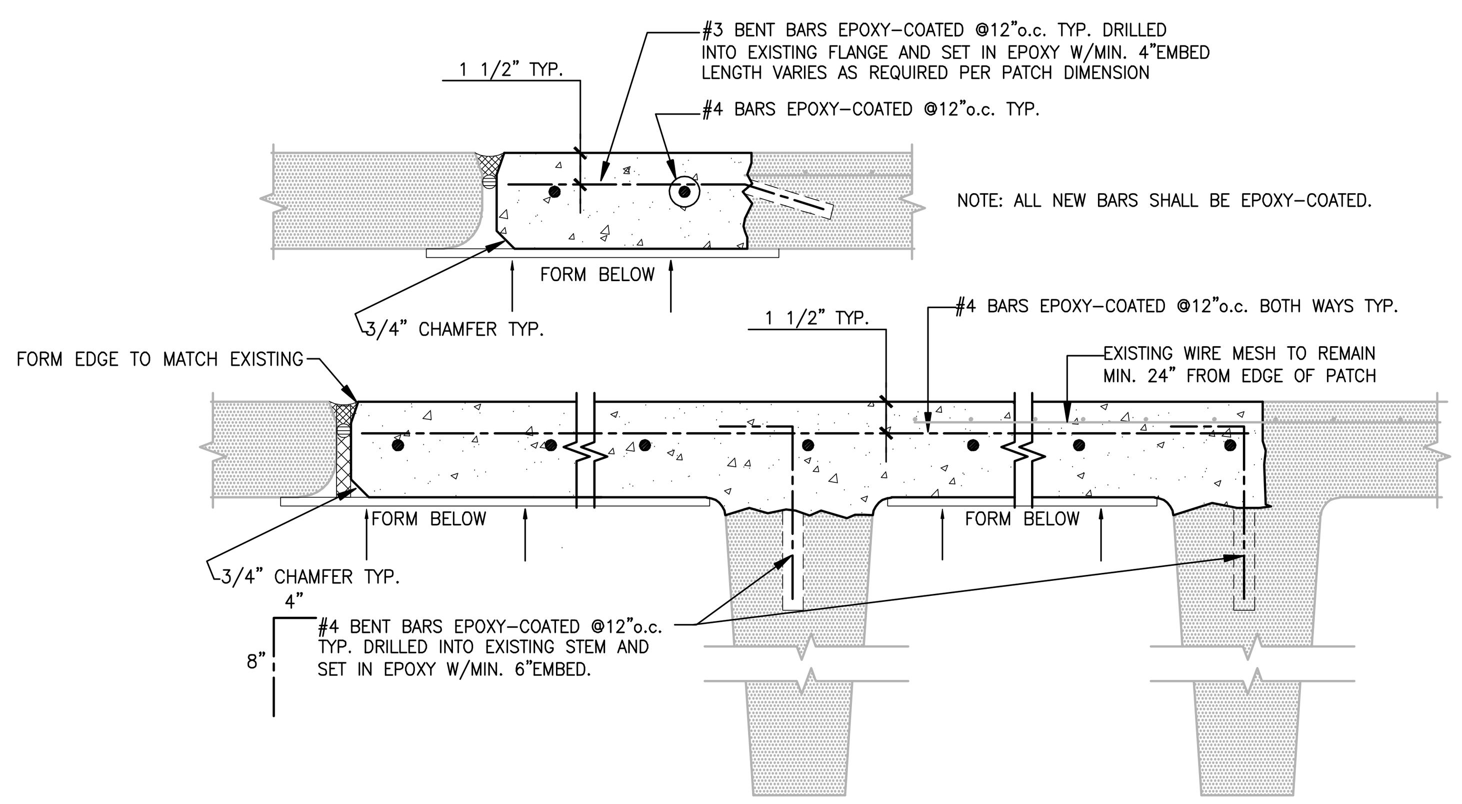

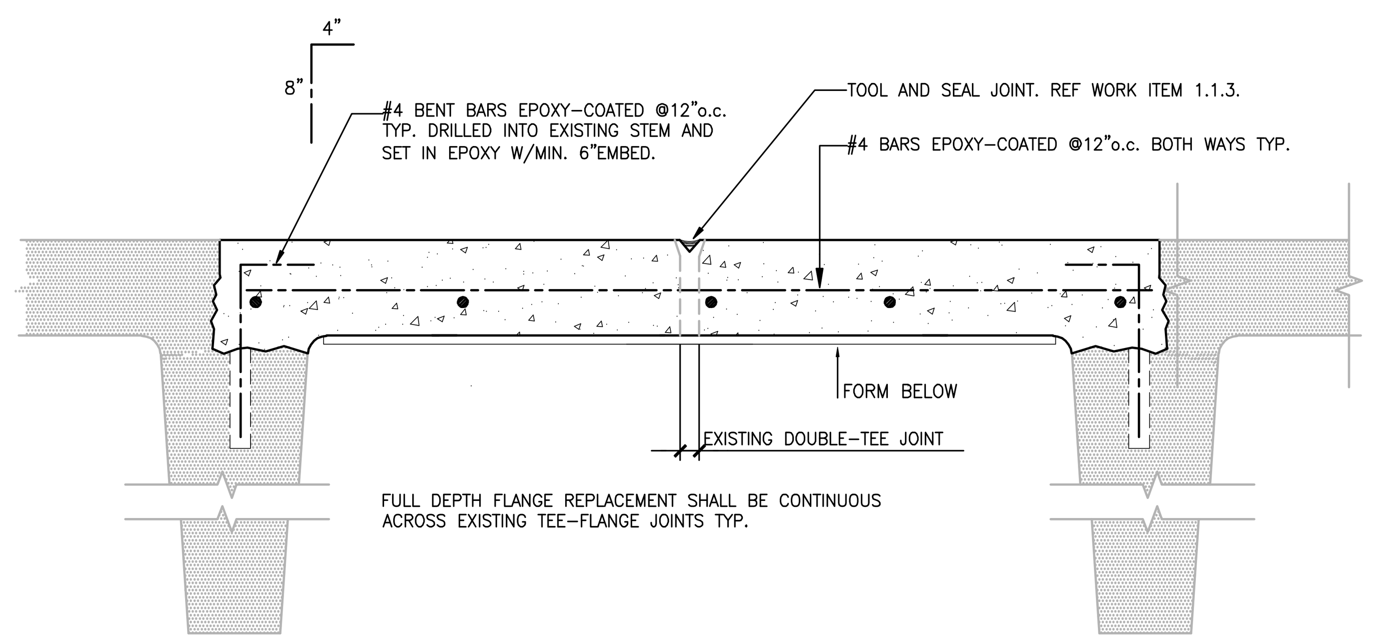

1. VERIFY DELAMINATED AREA BY VISUAL OBSERVATION AND SOUNDING.
2. SAW-CUT EDGES MIN. 1/2" DEEP ALL AROUND PATCH AREA TO ACHIEVE UNIFORM STRAIGHT EDGES TYP.
2. CHIP AND REMOVE ALL LOOSE CONCRETE AT DELAMINATED AREA FULL DEPTH. DO NOT DAMAGE EXISTING REBAR OR WWF.
4. REMOVE ALL CORROSION FROM EXISTING REBAR AND WIRE MESH AND REMAINING LOOSE CONCRETE BY SANDBLASTING.
5. COAT SANDBLASTED REBAR WITH SPECIFIED BAR COATING. COAT BARS COMPLETELY AROUND.
6. IF LOSS OF AREA OF EXISTING REBAR OR WIRE MESH IS GREATER THAN 20%, REMOVE EXISTING BAR AND REPLACE WITH EQUAL SIZE EPOXY-COATED BAR. IF ENTIRE BAR IS ABLE TO BE REMOVED WITHOUT EXTENDING REPAIR INTO SOUND CONCRETE, REMOVE EXISTING AND REPLACE WITH EQUAL SIZE EPOXY-COATED BAR OR 6X6-W2.1XW2.1 EPOXY-COATED WWF AS APPLICABLE. SUPPLEMENT WITH ADDED BARS AND/OR MESH AS DIRECTED BY ENGINEER. SECURE ALL NEW AND EXISTING BARS IN PLACE WITH PLASTIC COATED TIES AS NECESSARY.
7. COAT CUT ENDS OF ALL NEW EPOXY-COATED BARS WITH SPECIFIED BAR COATING.
8. WET THE SURFACE TO ACHIEVE SATURATED-SURFACE-DRY CONDITION AT THE TIME OF NEW CONCRETE POUR. REMOVE ALL STANDING WATER.
9. APPLY CEMENT SLURRY WITH BROOM TO ALL EXISTING CONCRETE SURFACES.
10. FORM BELOW AND POUR SPECIFIED CONCRETE.
11. TOOL ALL PATCHES EDGES. BEVEL AND TOOL EDGE AT JOINT TO ACHIEVE UNIFORM JOINT PROFILE TO MATCH EXISTING.
12. APPLY LIGHT BROOM FINISH.
13. WET CURE THE PATCH MINIMUM 5 DAYS.
14. APPLY SEALANT TO ALL PATCH EDGES.
15. REMOVE ALL FORMWORK AND FOAM AT JOINTS.

5/S8 FULL DEPTH PATCH
SCALE: none

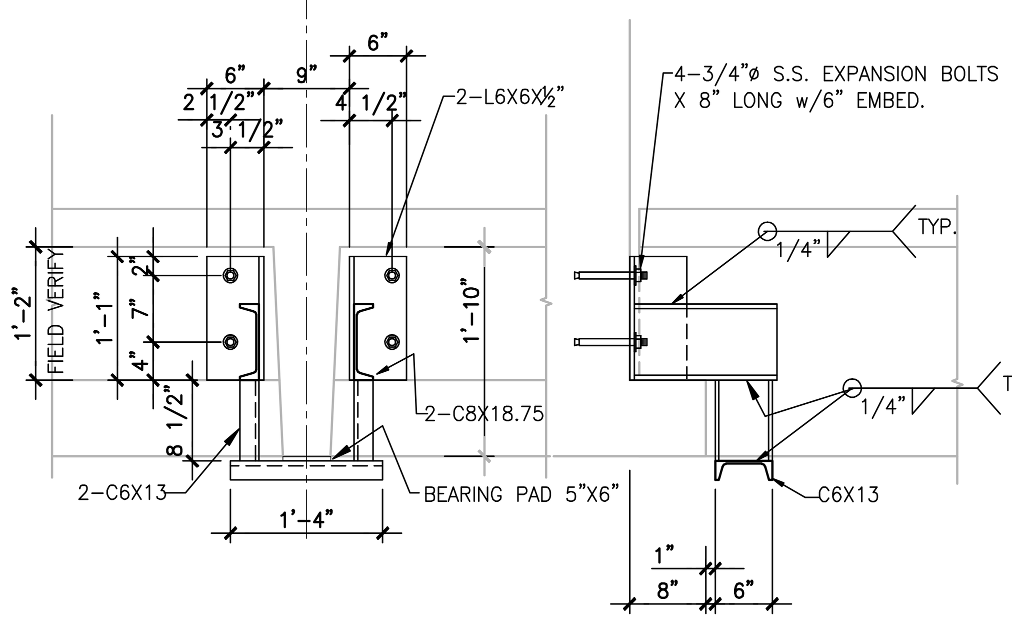

NOTE:

1. ASSEMBLY IS SHOP WELDED AND HOT-DIPPED GALVANIZED AFTER FABRICATION.
2. CONTRACTOR FIELD VERIFY ALL DIMS RELATED TO EXISTING TEE STEM AND LEDGE.

9/S8 SUPPLEMENTAL TEE-STEM BRACKET CASE 1
SCALE: none

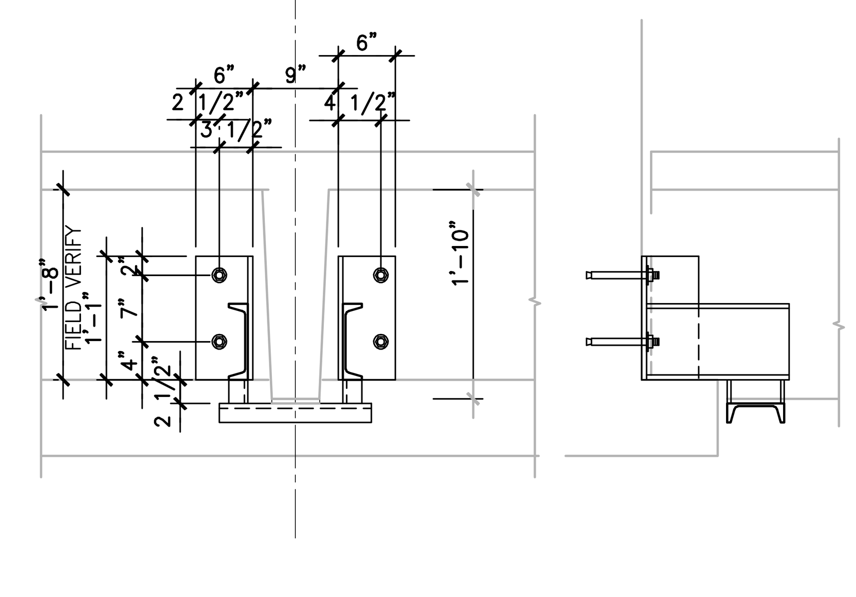

9/S8 SUPPLEMENTAL TEE-STEM BRACKET CASE 2
SCALE: none

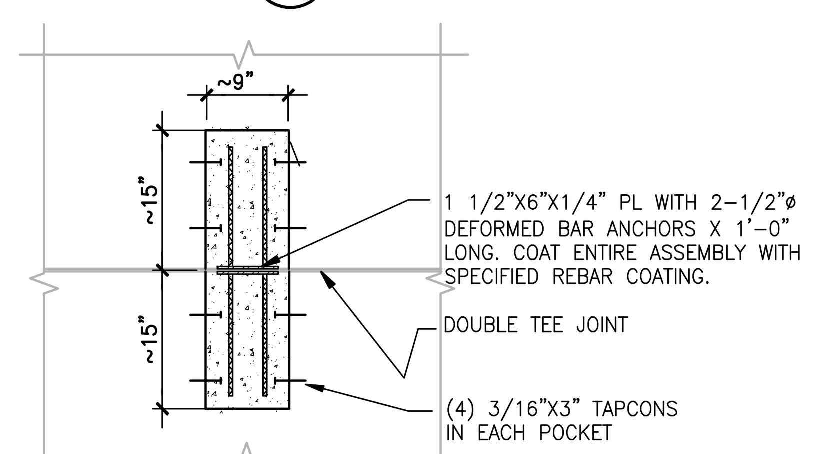

NOTES:

1. SAW CUT 9" X 15" X 2 1/2" MINIMUM POCKET. REMOVE ENTIRE EXISTING FLANGE-TO-FLANGE CONNECTION EMBED.
2. WELD NEW SLUG PER DETAIL 2/S6.
3. COAT ENTIRE ASSEMBLY WITH SPECIFIED REBAR COATING.

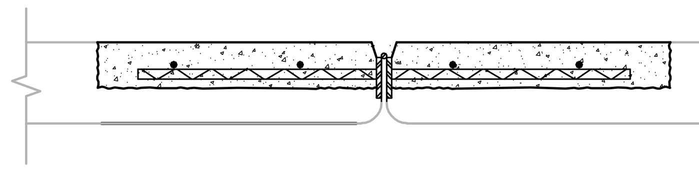

6/S8 DETAIL – REPLACEMENT OF TEE-TO-TEE CONNECTION EMBED
SCALE: none

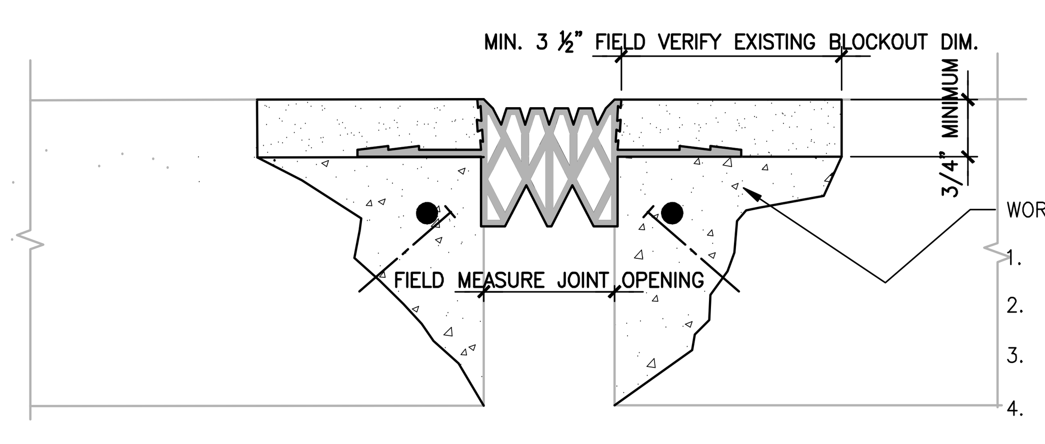

WORK ITEM 2.15
1. CHIP OUT DELAMINATED CONCRETE AT BLOCK-OUT AND JOINT FACE.
2. SANDBLAST SURFACE TO REMOVE ALL LAITANCE, LOOSE CONCRETE, AND DEBRIS.
3. INSTALL 2 ROWS 1/4"ø TAPCON SCREWS AT 12" o.c.
4. ADD #3 LONGITUDINAL CONTINUOUS EPOXY-COATED BAR AT PATCHES EXCEEDING 3" DEPTH TYP.

1. REMOVE EXISTING JOINT ENTIRELY.
2. SANDBLAST BLOCK-OUT TO REMOVE ALL LAITANCE, LOOSE CONCRETE, AND DEBRIS.
3. FIELD MEASURE JOINT OPENING. CHOOSE JOINT SIZE BASED ON CURRENT OPENING WIDTH AND EXPECTED THERMAL MOVEMENT AS SPECIFIED BY THE ENGINEER. SUBMIT JOINT TO ENGINEER FOR APPROVAL.
4. PATCH BLOCK-OUT AND SLAB-EDGE AS REQUIRED PER WORK ITEM 2.15.
5. INSTALL NEW JOINT FOLLOWING ALL MANUFACTURER'S SPECIFICATIONS.
6. RECESS GLAND. PROPERLY SIZED GLAND SHALL NOT PROJECT ABOVE HEADER.
7. AS APPLICABLE, BUTT JOINT TO COLUMN OR WALL FACE. APPLY COVE SEALANT (LOW MODULUS HYBRID SEALANT, MASTERSEAL NP 150 BY BASF OR EQUIV.) BETWEEN JOINT AND COLUMN FACE FULL WIDTH OF JOINT.
8. AS APPLICABLE, TURN WING FLANGE UP VERTICAL WALL SURFACE AND FASTEN WITH 1/4"X2" ALUMINUM TERM. BAR W/STAINLESS STEEL DRIVE-PIN ANCHORS AT 16"o.c. TYP.

7/S8 NEW EXPANSION JOINT
SCALE: none

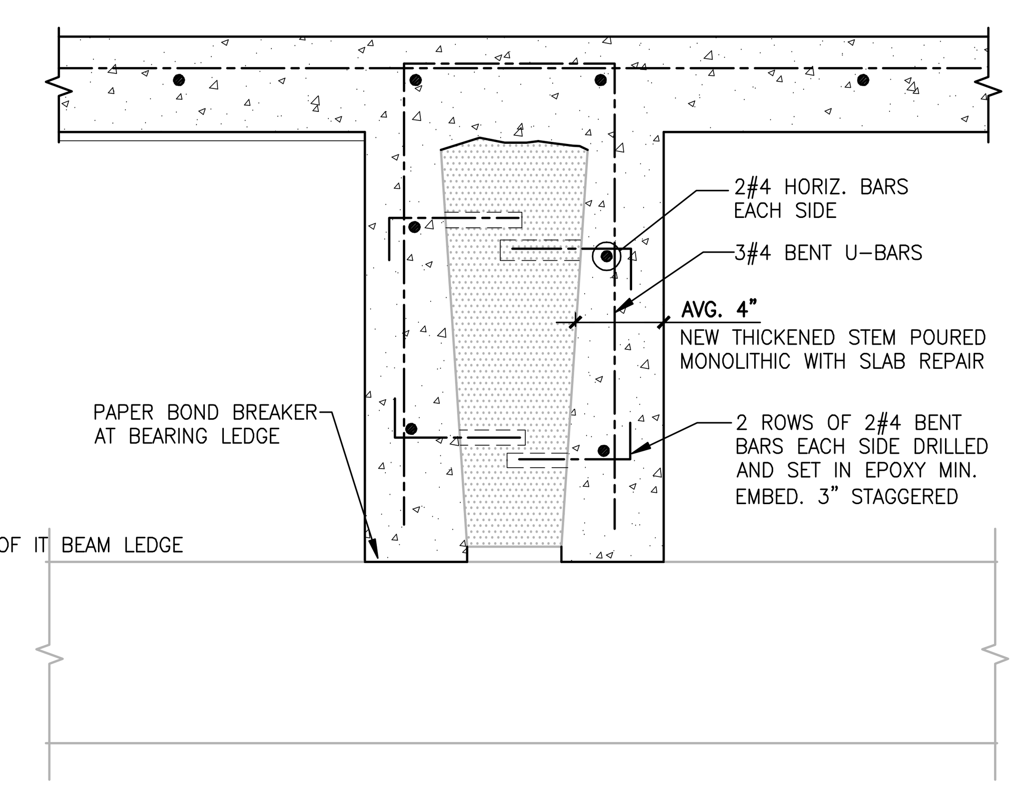

8/S8 SECTION– TEE STEM REPAIR
SCALE: NONE

REVISION DESCRIPTION	
DATE	10-5-16
DRAWN	MD
CHECKED	MD

I HEREBY CERTIFY THAT THIS PLAN, SPECIFICATION OR REPORT WAS PREPARED BY ME OR UNDER MY DIRECT SUPERVISION AND THAT I AM A REGISTERED PROFESSIONAL ENGINEER UNDER THE LAWS OF THE STATE OF MINNESOTA DATE 10-5-16
26604 REG. NO. SIGNATURE

CITY OF DULUTH
HART DISTRICT PARKING RAMP
115 EAST SUPERIOR STREET
DULUTH, MINNESOTA

HART DISTRICT PARKING RAMP
2016-2017 STRUCTURAL REHAB

PALANISAMI & ASSOC., INC.
CONSULTING ENGINEERS
5661 International Parkway
Minneapolis, Minnesota 55428
P: 763-533-9403 | F: 763-533-9586
eng@palanisami.com
306 W. Superior Street Suite 604
Duluth, MN 55802
P: 218 820-7534

PAI JOB NUMBER: 16142
SHEET NUMBER
S8

Copyright © 2010 By Palanisami & Assoc., Inc.