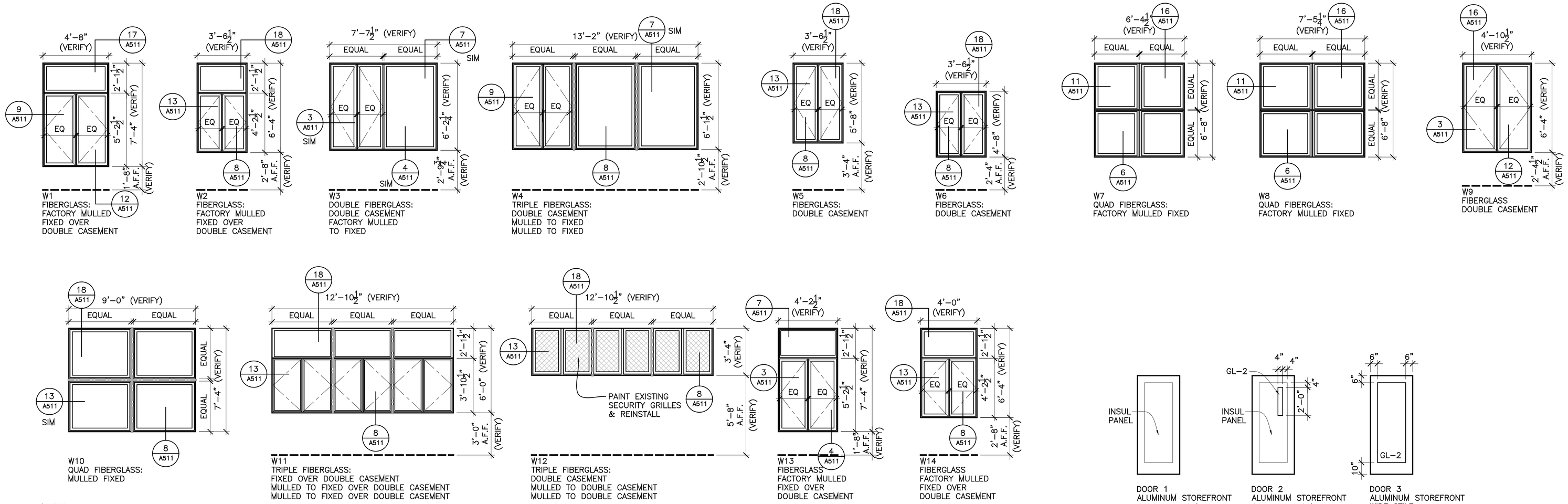

NOTES:

1. CONTRACTOR SHALL FIELD VERIFY ACTUAL EXISTING ROUGH OPENING DIMENSIONS BEFORE ORDERING WINDOW UNITS.
2. WINDOW UNITS TO BE INSTALLED PER MANUFACTURER'S SPECIFICATIONS.
3. FIELD–ASSEMBLED REINFORCED ½" STEEL MULL INDICATED AT LOCATIONS MARKED THUS: SEE DETAIL 14/A511.
4. FIELD–ASSEMBLED ½" MARVIN 'MRF' MULL REINFORCEMENT INDICATED AT LOCATIONS MARKED THUS. CONTACT MANUFACTURER FOR INFORMATION.

WINDOW TYPES
1/4" = 1'–0"

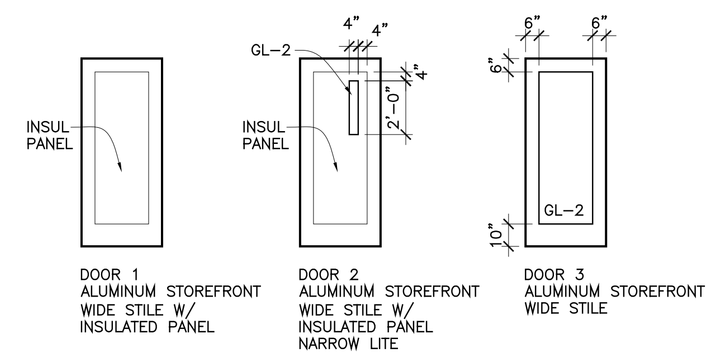

DOOR TYPES
1/4" = 1'–0"

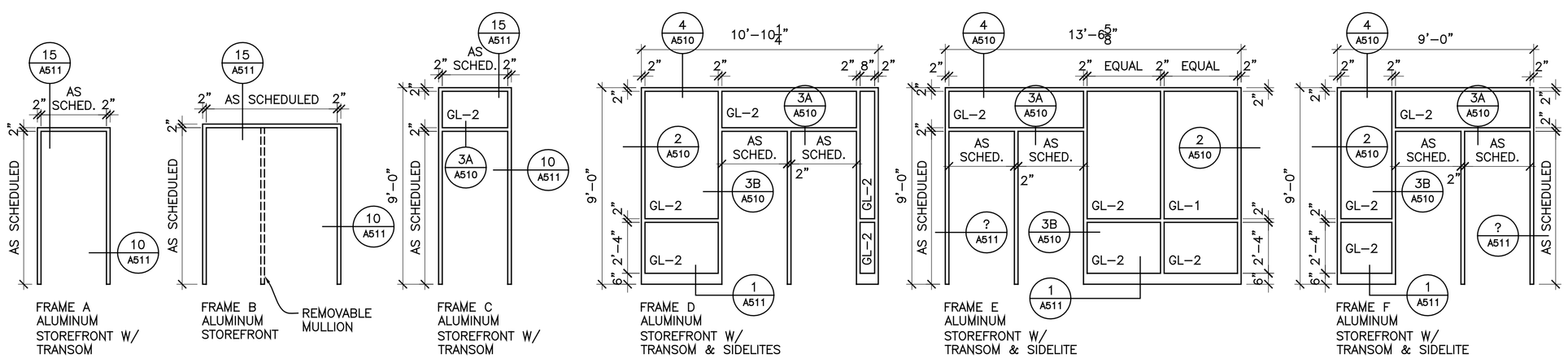

FRAME TYPES
1/4" = 1'–0"

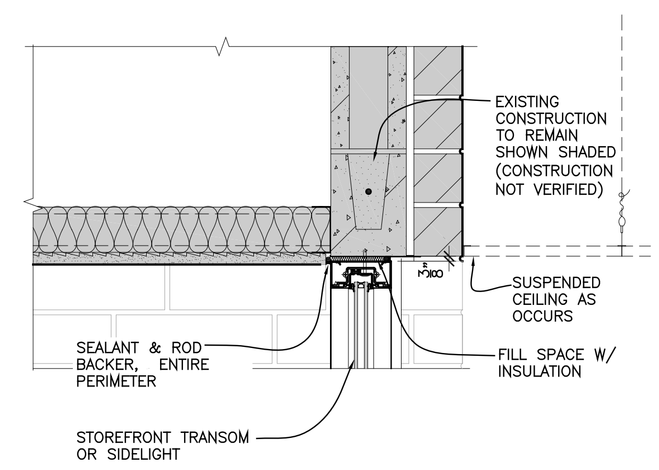

4 HEAD CONDITION AT STOREFRONT
1 1/2" = 1'–0"

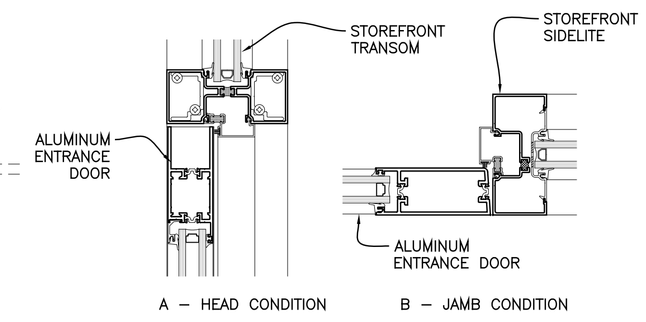

3 DOOR HEAD & JAMB AT STOREFRONT
3" = 1'–0"

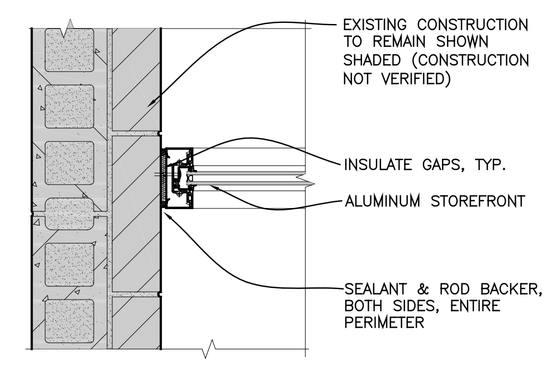

2 JAMB CONDITION AT STOREFRONT
1 1/2" = 1'–0"

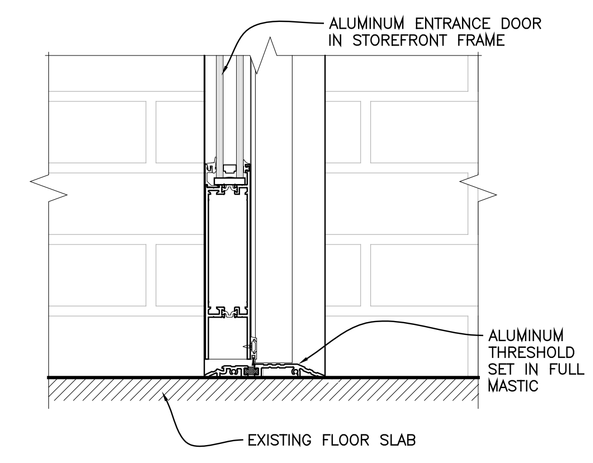

1 SILL AT ALUMINUM ENTRANCE DOOR
3" = 1'–0"

DOOR SCHEDULE

DOOR NO.	DOOR SIZE	DOOR MAT'L	DOOR TYPE	FRAME MAT'L	FRAME TYPE	DETAILS HEAD	DETAILS JAMB	DETAILS SILL	HDWE GROUP	REMARKS *
LEVEL 1										
000	3'–0" X 7'–0"	AL	2	AL	A	15/A511	10/A511	1/A510	–	–
001	(PR) 2'–6" X 7'–0" 3'–4" X 7'–0"	AL	1	AL	B	15/A511	10/A511	1/A510	–	REMOVABLE MULLION
010	3'–0" X 7'–0"	AL	2	AL	A	15/A511	10/A511	1/A510	–	–
013	(PR) 3'–0" X 7'–0"	AL	2	AL	F	3A/A510	3B/A510	1/A510	–	–
016	(PR) 3'–0" X 7'–0"	AL	3	AL	E	3A/A510	3B/A510	1/A510	–	–
LEVEL 3										
100	(PR) 3'–0" X 7'–0"	AL	3	AL	D	3A/A510	3B/A510	1/A510	–	–
116	3'–4" X 7'–0"	AL	2	AL	C	3A/A510	10/A511	1/A510	–	–

DULUTH MINNESOTA

CITY OF DULUTH
Facilities Department
1532 West Michigan Street
Duluth, Minnesota
City of Duluth PN 13-003

Central Hillside Community Center Ext. Door & Window Replacement 12 East 4th Street

CONSTRUCTION DOCUMENTS

BIDDING SET

NO.	DATE	ISSUE RECORD
0	06/21/13	ISSUED FOR CONSTRUCTION

I HEREBY CERTIFY THAT THIS PLAN, SPECIFICATION, OR REPORT WAS PREPARED BY ME OR UNDER MY DIRECT SUPERVISION AND THAT I AM A DULY LICENSED ARCHITECT UNDER THE LAWS OF THE STATE OF MINNESOTA

SIGNATURE: Kimberly A. Meldahl
PRINTED NAME: Kimberly A. Meldahl
LIC. NO.: 48047 DATE: 06/21/13

TKDA
11 East Superior Street, Suite 340
Duluth, MN 55802
218.724.8578
tkda.com

DESIGNED	DRAWN	CHECKED
KSM	KSM	RES

DOOR FRAME & WINDOW TYPES & SCHEDULE

A510

15245.001

BAR IS ONE INCH ON ORIGINAL DRAWING. IF NOT ONE INCH ON THIS DRAWING ADJUST SCALES ACCORDINGLY.

DATE PLOTTED: Jun 24, 2013 - 7:59am
DRAWING PATH: W:\Projects\Duluth_City\15245001_Central Hillside Community Center\arch\dwgs\00CRNT\CENTRAL HILLSIDE COMMUNITY CENTER WINDOW & DOORA510 DOOR FRAME & WINDOW TYPES & SCHEDULE.dwg