RIDGEVIEW ROAD INFRASTRUCTURE

148th FIGHTER WING MINNESOTA AIR NATIONAL GUARD

DULUTH IAP, MINNESOTA

ABBREVIATIONS

A		**D**		**H**		**P**		**T**	
AB	Abrasive	D	Depth	HC	Hollow Core	PC	Portland Cement	T	Tread, Toilet
AC	Acoustic	DBL	Double	HD	Hand Dryer	PBD	Particle Board	TB	Towel Bar
ACBD	Acoustic Board	DEMO	Demolition	HDBD	Hardboard	PERF	Perforated	TD	Towel Dispenser
ACT	Acoustical Ceiling Tile	DET	Detail	HDW	Hardware	PL	Plate	TEL	Telephone
ADDM	Addendum	DF	Drinking Fountain	HDWD	Hardwood	PLAS	Plaster	TEMP	Tempered
ADJ	Adjacent	DIA	Diameter	HNDRL	Handrail	PLAM	Plastic Laminate	TER	Terrazzo
ADJ	Adjoining	DIM	Dimension	HM	Hollow Metal	PLYWD	Plywood	TKBD	Tack Board
ADJ	Adjustable	DISP	Disperser	HORIZ	Horizontal	PREFIN	Prefinished	TAG	Tongue and Groove
AFF	Above Finished Floor	DN	Down	HT	Height	PTD	Paper Towel Dispenser	TPD	Toilet Paper Dispenser
AHU	Air Handling Unit	DR	Door			PTH	Paper Towel Holder	TYP	Typical
ALT	Alternate	DR	Drain			PT	Paint		
ALUM	Aluminum	DS	Down Spout						
AP	Access Panel	DT	Drain Tile						
APPROX	Approximate	DW	Dishwasher	**I, J, K**				**U**	
ARCH	Architect	DWG	Drawing	ID	Inside Diameter	**Q**		UNEX	Unexcavated
AWT	Acoustical Wall Treatment			INSUL	Insulation	QT	Quarry Tile	UNFIN	Unfinished
				INT	Interior			UNO	Unless Noted Otherwise
				JAN	Janitor			UR	Urinal
				JST	Joist				
				JT	Joint				
B		**E**				**R**		**V**	
BB	Bulletin Board	E	East			R	Riser, Radius, Range	VB	Vinyl Base
BD	Board	EA	Each			RAD	Radiator	VCT	Vinyl Composition Tile
BITUM	Bituminous	EF	Each Face			RB	Resilient Base	VERT	Vertical
BLDG	Building	EFIS	Exterior Finish Insulation System			RD	Roof Drain	VIF	Verify In Field
BLK	Block	EJ	Expansion Joint			REC	Recessed	VWC	Vinyl Wall Covering
BLKG	Blocking	EL	Elevation			REF	Refrigerator		
BM	Bench Mark, Beam	ELEC	Electrical			REINF	Reinforced		
BMU	Bituminous Masonry Unit	ELEV	Elevator			REQD	Required		
BOT	Bottom	ENCL	Enclosure			RESIL	Resilient		
BRG	Bearing	EQ	Equal			RM	Room		
BUR	Built-Up Roofing	EW	Each Way			RO	Rough Opening		
		EWC	Elec. Water Cooler			RS	Rough Sawn		
		EXP	Expansion, Exposed			RTF	Rubber Tile Flooring		
		EXPMATL	Expansion Material						
		EXT	Exterior						
		EXIST	Existing						
C		**F**		**L**		**S**		**W, X, Y, Z**	
CAB	Cabinet			LAV	Lavatory	S	South	W	West
CB	Catch Basin			LF	Linear Feet (Foot)	SAT	Suspended Acoustical Tile	W/	With
CI	Cast Iron			LINO	Linoleum	SC	Solid Core	W/O	Without
CJ	Control Joint			LKR	Locker	SCHED	Schedule	WC	Water Closet
CT	Ceramic Tile			LOC	Location, Locate	SECT	Section	WD	Wood
CEM	Cement	FD	Floor Drain			SD	Soap Dispenser	WDW	Window
CEMPLAS	Cement Plaster	FDTN	Foundation			SGD	Sliding Glass Door	WGL	Wire Glass
CHBD	Chalk Board	FE	Fire Extinguisher			SG	Structural Glazed Tile	WH	Water Heater
CG	Corner Guard	FEC	Fire Extinguisher Cabinet			SHTHG	Sheathing	WWM	Welded Wire Mesh
CL	Center Line	FIN	Finish			SIM	Similar	WI	Wrought Iron
CLG	Ceiling	FLR	Floor			SND	Sanitary Napkin Disperser		
CLR	Clear	FP	Fireproofing			SPEC	Specification		
CMU	Concrete Masonry Unit	FR	Frame			SQ FT	Square Foot		
COR/CR	Contracting Officer Rep)	FT	Foot			SS	Stainless Steel		
COL	Column	FTG	Footing			STL	Steel		
COMP	Composition	FWC	Fabric Wall Covering			STOR	Storage		
CONC	Concrete					STRUCT	Structural		
CONF	Conference					SUSP	Suspended		
CONT	Continuous					SV	Sheet Vinyl		
CONTR	Contractor								
CP	Carpet								
CSG	Casing								
CUH	Cabinet Unit Heater								

N			
N	North		
NA	Not Applicable		
NIC	Not In Contract		
NTS	Not To Scale		
NO	Number		
O			
OC	On Center		
OD	Outside Diameter		
OFF	Office		
OPNG	Opening		
OPP	Opposite		
OH	Overhead		
ORIG	Original		

SYMBOL CHARACTERS

@	At
∠	Angle
℄	Channel
℄	Center Line
⊥	Perpendicular
∥	Parallel
'	Feet
"	Inches
#	Number
⌧	Smoke
⌑	Square
Ø	Round, Diameter

PROJECT GENERAL NOTES

1) THE GENERAL CONTRACTOR, ASSOCIATED SUBCONTRACTORS, AND ALL OF THEIR SUBORDINATES (REGARDLESS OF THE TRADE INVOLVED) SHALL FAMILIARIZE THEMSELVES WITH ALL INFORMATION LOCATED WITHIN THE COMPLETE CONSTRUCTION DOCUMENT SET (ALL DRAWINGS AND SPECIFICATIONS) PRIOR TO CONSTRUCTION.

2) ALL WORK SHALL BE PERFORMED IN STRICT CONFORMANCE WITH LAWS, ORDINANCES, RULES AND REGULATIONS OF GOVERNMENT AUTHORITIES HAVING JURISDICTIONS.

3) BEFORE COMMENCEMENT OF WORK, THE CONTRACTORS AND ASSOCIATED SUBCONTRACTORS SHALL VERIFY ALL DIMENSIONS, CONDITIONS SHOWN IN THE CONTRACT DOCUMENTS, AND EXISTING CONDITIONS PRIOR TO BIDDING. ANY DEVIATIONS, DISCREPANCIES AND OR CONFLICTS SHALL BE REPORTED IN WRITING.

4) DO NOT SCALE. DIMENSIONS GOVERN, LARGE SCALE DETAILS GOVERN OVER SMALL SCALE.

5) REFERENCES IN THE SPECIFICATIONS TO EQUIPMENT, MATERIAL, ARTICLES OR PROCESSES BY BRAND NAME, TRADE NAME, MAKE OR CATALOG NUMBER, IS ALL BE REGARDED AS ESTABLISHING A STANDARD OF QUALITY AND SHALL NOT BE CONSTRUED AS LIMITING COMPETITION. THE CONTRACTOR MAY AT ITS OPINION, USE ANY EQUIPMENT, MATERIAL, ARTICLE, OR PROCESS THAT, IN THE JUDGEMENT OF THE CONTRACTING OFFICER, IS EQUAL TO THAT NAMED IN THE SPECIFICATIONS, UNLESS OTHERWISE SPECIFICALLY PROVIDED IN THIS CONTRACT.

6) REPACE DAMAGED SOD/SOIL DUE TO CONSTRUCTION RELATED ACTIVITES WITH BLACK DIRT AND NEW SOD TO ACHIEVE A UNIFORM SURFACE AND APPEARANCE.

SHEET INDEX

SHEET NO	SHEET NAME
G0.01	PROJECT TITLE SHEET
C1.00	SITE REMOVALS & EROSION CONTROL PLAN
C2.00	SITE FENCING, GRADING, & UTILITIES PLAN
C3.00	SITE LAYOUT & SURFACING PLAN
C4.00	SITE NOTES & DETAILS
C4.01	LIFT GATE DETAILS
A2.01	TRAFFIC CHECK HOUSE
S1.00	GENERAL NOTES
S2.00	FOUNDATION PLAN & DETAILS
E0.01	ELECTRICAL SYMBOLS, ABBREVIATIONS, AND SCHEDULES
E1.01	ELECTRICAL SITE PLAN
E1.02	ELECTRICAL SITE PLAN
E1.03	TRAFFIC CHECK HOUSE ELECTRICAL SITE PLAN
E2.01	ELECTRICAL BUILDING PLANS
E7.01	ELECTRICAL DETAILS
E8.01	ELECTRICAL SCHEDULES
E9.01	ELECTRICAL DIAGRAMS

CONTACTS

CONTRACTING OFFICER'S REP.
148th FIGHTER WING
MINNESOTA AIR NATIONAL GUARD
OFFICE OF THE BASE CIVIL ENGINEER
PHONE: (218) 788-7290; FAX: (218) 788-7338
CONTACT: MAJ. RYAN KASPARI
BASE CIVIL ENGINEER
EMAIL: RYAN.R.KASPARI.MIL@MAIL.MIL

PROJECT MANAGER, ARCHITECT
LHB, INC.
21 WEST SUPERIOR STREET, SUITE 500
DULUTH, MN 55802
PHONE: (218) 727-6446
CONTACT: CYNTHIA POIRIER
E-MAIL: CYNTHIA.POIRIER@LHBCORP.COM

STRUCTURAL ENGINEER
LHB, INC.
21 WEST SUPERIOR STREET, SUITE 500
DULUTH, MN 55802
PHONE: (218) 727-6446
CONTACT: JENNIFER BABCOCK
E-MAIL: JENNIFER.BABCOCK@LHBCORP.COM

CIVIL ENGINEER
LHB, INC.
21 WEST SUPERIOR STREET, SUITE 500
DULUTH, MN 55802
PHONE: (218) 727-6446
E-MAIL: DAN.SHAW@LHBCORP.COM
CONTACT: DAN SHAW

ELECTRICAL ENGINEER
LHB, INC.
21 WEST SUPERIOR STREET, SUITE 500
DULUTH, MN 55802
PHONE: (218) 727-6446
CONTACT: MICHAEL BILBEN, Proj. Elec. Engineer
E-MAIL: MICHAEL.BILBEN@LHBCORP.COM

MATERIALS

- FACE BRICK
- CAST-IN-PLACE CONCRETE
- CONCRETE BLOCK
- CONCRETE BLOCK (LARGE SCALE)
- WOOD STUD PARTITION
- METAL STUD PARTITION
- BATT INSULATION
- EXTERIOR RIGID INSULATION
- RIGID INSULATION (LARGE SCALE)
- PLYWOOD
- WOOD BLOCKING
- FINISH WOOD
- GYPSUM BOARD OR PLASTER
- METAL-LARGE SCALE
- STONE
- EXISTING (DETAILS/SECTIONS)

PROJECT GENERAL NOTES

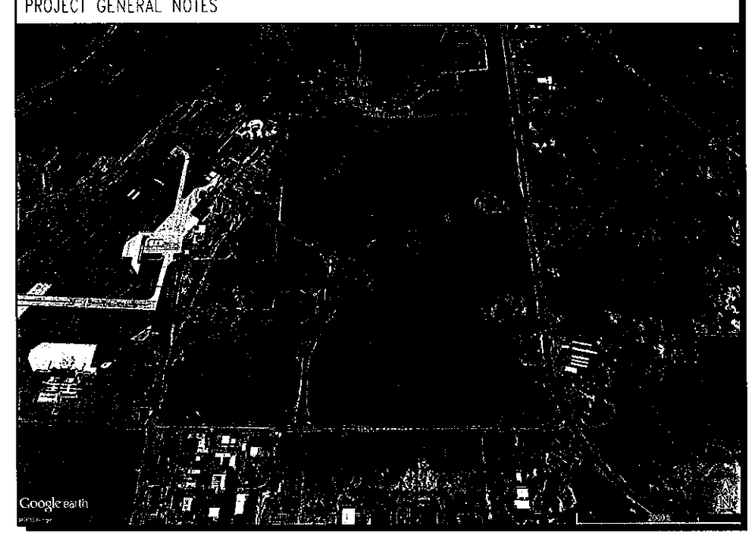

LHB
PERFORMANCE DRIVEN DESIGN.
LHBcorp.com
21 W. Superior St., Ste 500 | Duluth, MN 55802 | 218.727.6446

CLIENT:
148th FIGHTER WING
MINNESOTA AIR NATIONAL GUARD

DULUTH IAP, MINNESOTA

THIS SQUARE APPEARS 1/2"x1/2" ON FULL SIZE SHEETS

NO	DATE	ISSUED FOR
	8/13/15	BID
	8/13/15	TYPE B3 FINAL SUBMITTAL

NO	DATE	REVISION

I HEREBY CERTIFY that this plan, specification or report was prepared by me or under my direct supervision and that I am a duly Licensed Architect under the laws of the State of Minnesota.

Signature: Cynthia Poirier

Typed or Printed Name: CYNTHIA POIRIER

Date: 8-13-15 Reg. No.: 22021

COPYRIGHT 2014 BY LHB, INC. ALL RIGHTS RESERVED.

PROJECT NAME:
RIDGEVIEW ROAD INFRASTRUCTURE

FMKM062039B

DRAWING TITLE:
PROJECT TITLE SHEET

FILE: Q:\12Proj\120094\BCD Drawings\E\120094 Ridgeview Entry Road E13 Central.rvt
DRAWN BY: DJB
CHECKED BY: CIP
PROJ. NO.: 120094
DRAWING NO: **G0.01**

C:\Users\djb\Documents\120094 Ridgeview Entry Road A14 Central_Immander.rvt
8/7/2015 3:18:28 PM

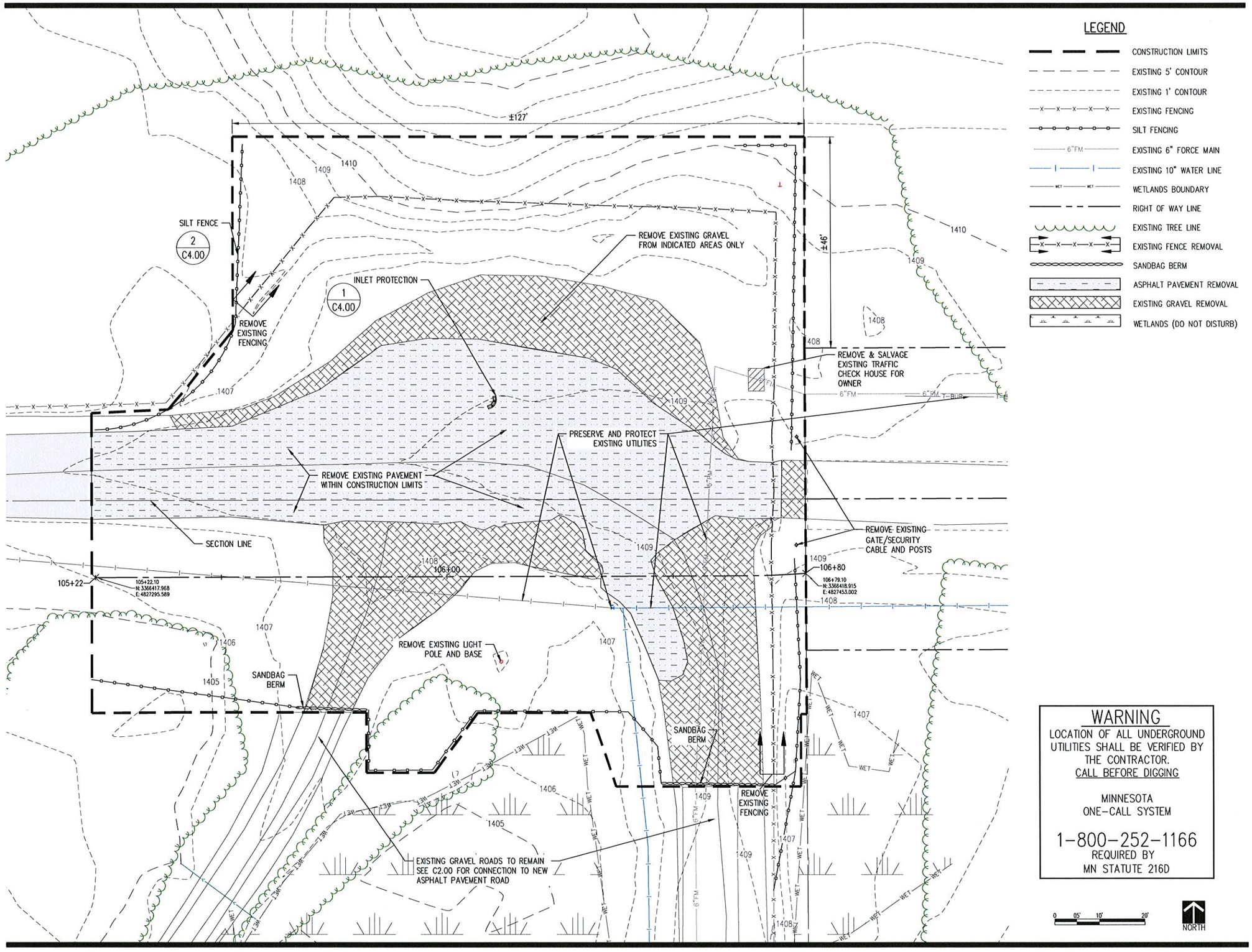

LEGEND

- CONSTRUCTION LIMITS
- EXISTING 5' CONTOUR
- EXISTING 1' CONTOUR
- EXISTING FENCING
- SILT FENCING
- EXISTING 6" FORCE MAIN
- EXISTING 10" WATER LINE
- WETLANDS BOUNDARY
- RIGHT OF WAY LINE
- EXISTING TREE LINE
- EXISTING FENCE REMOVAL
- SANDBAG BERM
- ASPHALT PAVEMENT REMOVAL
- EXISTING GRAVEL REMOVAL
- WETLANDS (DO NOT DISTURB)

WARNING

LOCATION OF ALL UNDERGROUND UTILITIES SHALL BE VERIFIED BY THE CONTRACTOR.
CALL BEFORE DIGGING

MINNESOTA
ONE-CALL SYSTEM

1-800-252-1166
REQUIRED BY
MN STATUTE 216D

LHB
PERFORMANCE DRIVEN DESIGN.
LHBcorp.com
21 W. Superior St., Ste 500 | Duluth, MN 55802 | 218.727.8446

CLIENT:
148th FIGHTER WING
MINNESOTA AIR
NATIONAL GUARD

DULUTH IAP, MINNESOTA

THIS SQUARE APPEARS 1/2"x1/2" ON FULL SIZE SHEETS

NO	DATE	ISSUED FOR

NO	DATE	REVISION
	8/13/15	BID
	8/13/15	TYPE B3 FINAL SUBMITTAL

I HEREBY CERTIFY that this plan, specification or report was prepared by me or under my direct supervision and that I am a duly Licensed Professional Engineer under the laws of the State of Minnesota.

SIGNATURE: Daniel G Shaw

TYPED OR PRINTED NAME: DANIEL G. SHAW

DATE: 8/13/15 REG. NO.: 41423

COPYRIGHT 2014 BY LHB, INC. ALL RIGHTS RESERVED.

PROJECT NAME:
RIDGEVIEW ROAD INFRASTRUCTURE

FMKM062039B

DRAWING TITLE:
SITE REMOVALS & EROSION CONTROL PLAN

FILE:
DRAWN BY: DRP
CHECKED BY: DGS
PROJ. NO: 120094
DRAWING NO.

C1.00

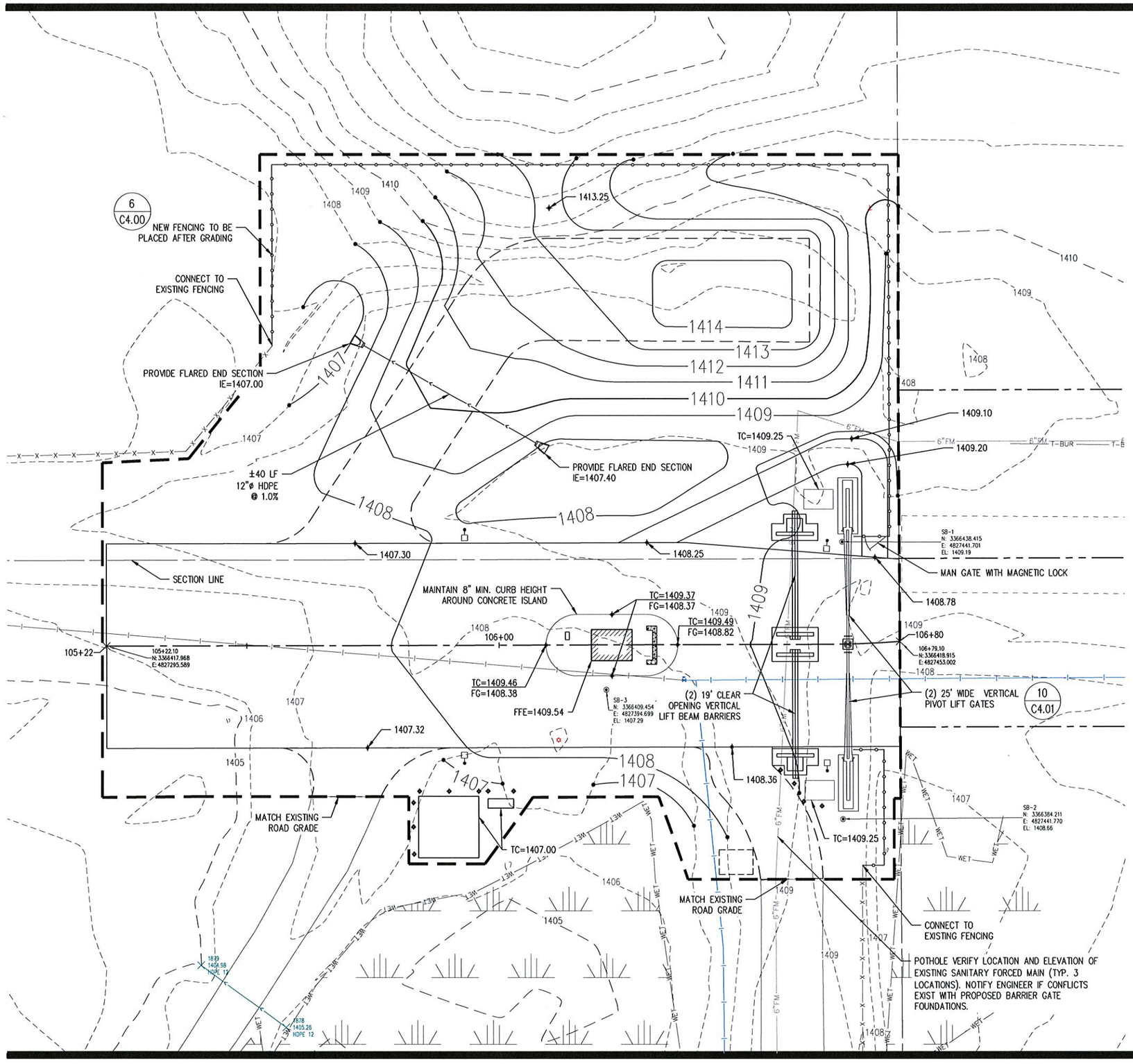

LEGEND

- CONSTRUCTION LIMITS
- 1410 — EXISTING 5' CONTOUR
- 1409 — EXISTING 1' CONTOUR
- 1410 — PROPOSED 5' CONTOUR
- 1409 — PROPOSED 1' CONTOUR
- PROPOSED CULVERT
- EXISTING FENCING
- PROPOSED FENCING
- 6"FM — EXISTING 6" FORCE MAIN
- EXISTING 10" WATER LINE
- WET — WETLANDS BOUNDARY
- RIGHT OF WAY LINE
- SECTION LINE
- ROADWAY ALIGNMENT
- WETLANDS (DO NOT DISTURB)

WARNING

LOCATION OF ALL UNDERGROUND UTILITIES SHALL BE VERIFIED BY THE CONTRACTOR.
CALL BEFORE DIGGING

MINNESOTA ONE-CALL SYSTEM
1-800-252-1166
REQUIRED BY MN STATUTE 216D

LHB
PERFORMANCE DRIVEN DESIGN.
LHBcorp.com
21 W. Superior St., Ste 500 | Duluth, MN 55802 | 218.727.8446

CLIENT:
148th FIGHTER WING
MINNESOTA AIR NATIONAL GUARD

DULUTH IAP, MINNESOTA

THIS SQUARE APPEARS 1/2"x1/2" ON FULL SIZE SHEETS

NO	DATE	ISSUED FOR
	8/13/15	BID
	8/13/15	TYPE B3 FINAL SUBMITTAL

NO	DATE	REVISION

I HEREBY CERTIFY that this plan, specification or report was prepared by me or under my direct supervision and that I am a duly Licensed Professional Engineer under the laws of the State of Minnesota.

SIGNATURE: Daniel G. Shaw

TYPED OR PRINTED NAME: DANIEL G. SHAW

DATE: 8/13/15 REG. NO.: 41423

COPYRIGHT 2014 BY LHB, INC. ALL RIGHTS RESERVED.

PROJECT NAME:
RIDGEVIEW ROAD INFRASTRUCTURE

FMKM062039B

DRAWING TITLE:
SITE FENCING, GRADING, & UTILITIES PLAN

FILE:
DRAWN BY: DRP
CHECKED BY: DGS
PROJ. NO: 120094
DRAWING NO: C2.00

PLAN KEY NOTES:

1. ASPHALT PAVING SHOWN ON THIS PLAN WILL BE CONSTRUCTED BY OTHERS UNDER SEPARATE CONTRACT.
2. ALL PAVEMENT STRIPING SHOWN ON THIS PLAN SHALL BE COMPLETED BY THIS CONTRACTOR FOLLOWING COMPLETION OF PAVEMENT WORK BY OTHERS.
3. CONTRACTOR SHALL TOP-DRESS GRAVEL SURFACING TO MATCH GRADE OF BITUMINOUS PAVING FOLLOWING COMPLETION OF PAVING OPERATIONS.

LEGEND

- GRAVEL ROADWAYS
- CONCRETE SURFACING
- 6" TOPSOIL AND SEEDING
- BITUMINOUS PAVEMENT (N.I.C.)

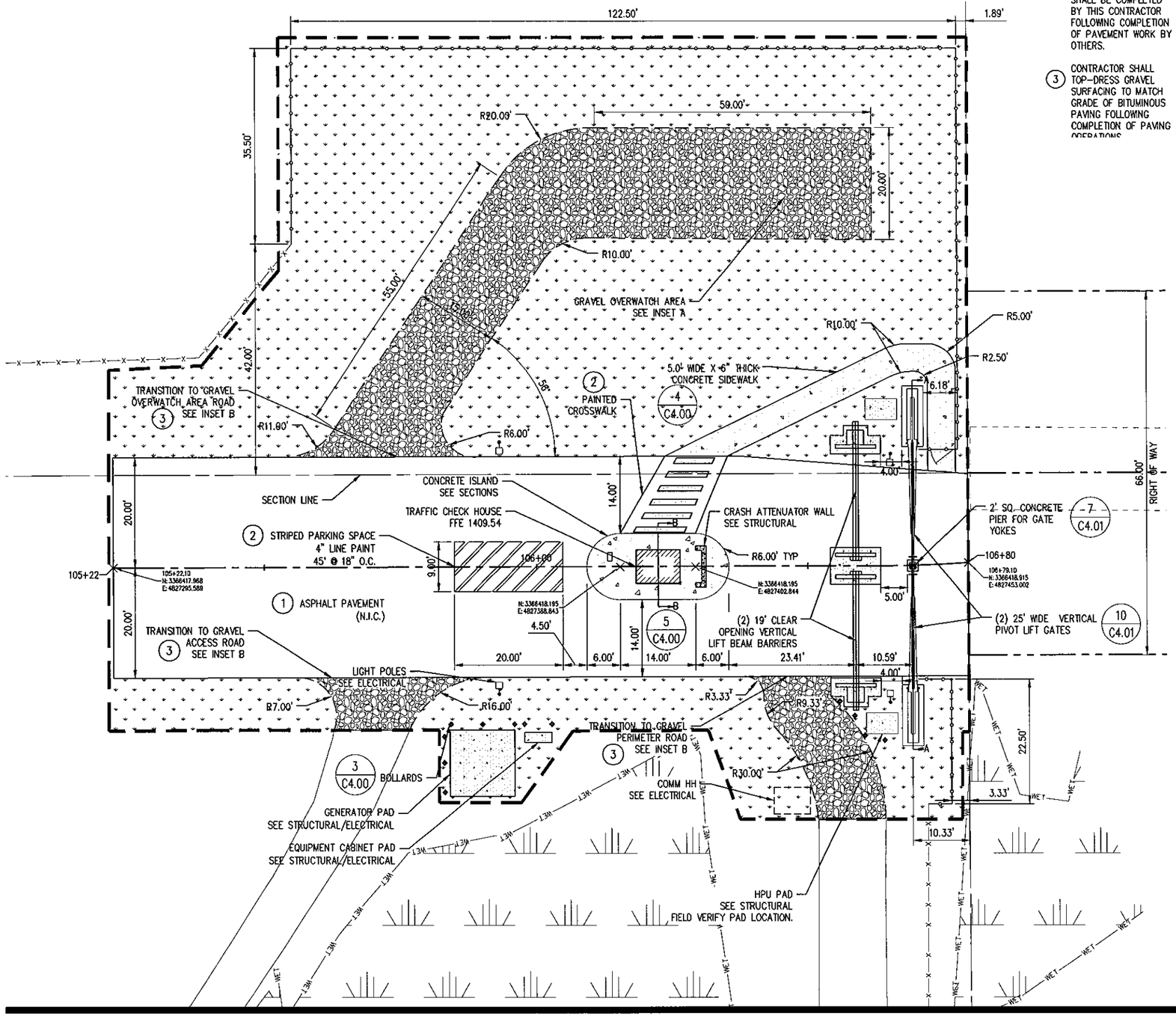

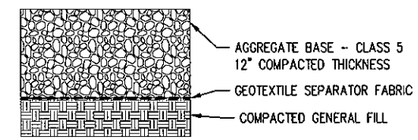

INSET A – GRAVEL ROAD SECTION
NOT TO SCALE

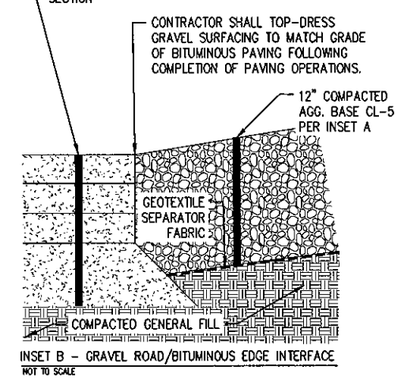

INSET B – GRAVEL ROAD/BITUMINOUS EDGE INTERFACE
NOT TO SCALE

WARNING

LOCATION OF ALL UNDERGROUND UTILITIES SHALL BE VERIFIED BY THE CONTRACTOR.
CALL BEFORE DIGGING

MINNESOTA
ONE-CALL SYSTEM

1-800-252-1166
REQUIRED BY
MN STATUTE 216D

0 05' 10' 20'

NORTH

LHB
PERFORMANCE DRIVEN DESIGN.
LHBcorp.com
21 W. Superior St, Ste 500 | Duluth, MN 55802 | 218.727.8446

CLIENT:
148th FIGHTER WING
MINNESOTA AIR
NATIONAL GUARD

DULUTH IAP, MINNESOTA

THIS SQUARE APPEARS 1/2"x1/2" ON FULL SIZE SHEETS

NO	DATE	ISSUED FOR

NO	DATE	REVISION
	8/13/15	BID
	8/13/15	TYPE B3 FINAL SUBMITTAL

I HEREBY CERTIFY that this plan, specification or report was prepared by me or under my direct supervision and that I am a duly Licensed Professional Engineer under the laws of the State of Minnesota.

SIGNATURE: Daniel G. Shaw

TYPED OR PRINTED NAME: DANIEL G. SHAW

DATE: 8/13/15 REG. NO.: 41423

COPYRIGHT 2014 BY LHB, INC. ALL RIGHTS RESERVED.

PROJECT NAME:
RIDGEVIEW ROAD
INFRASTRUCTURE

FMKM062039B

DRAWING TITLE:
SITE LAYOUT &
SURFACING PLAN

FILE:
DRAWN BY: DRP
CHECKED BY: DGS
PROJ. NO: 120094
DRAWING NO:

C3.00

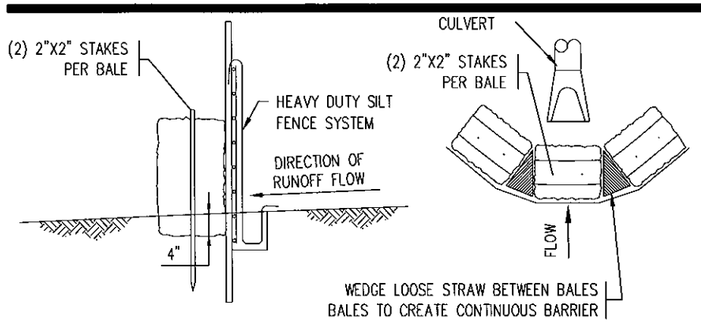

1 INLET PROTECTION DETAIL
NOT TO SCALE

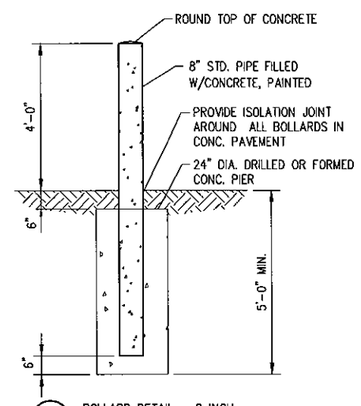

3 BOLLARD DETAIL – 8 INCH
NOT TO SCALE

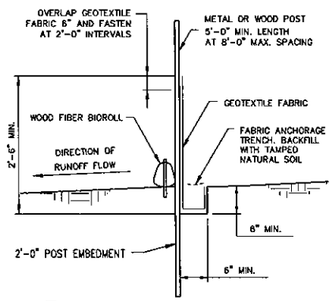

2 SILT FENCE DETAIL
NOT TO SCALE

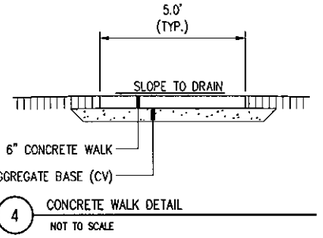

4 CONCRETE WALK DETAIL
NOT TO SCALE

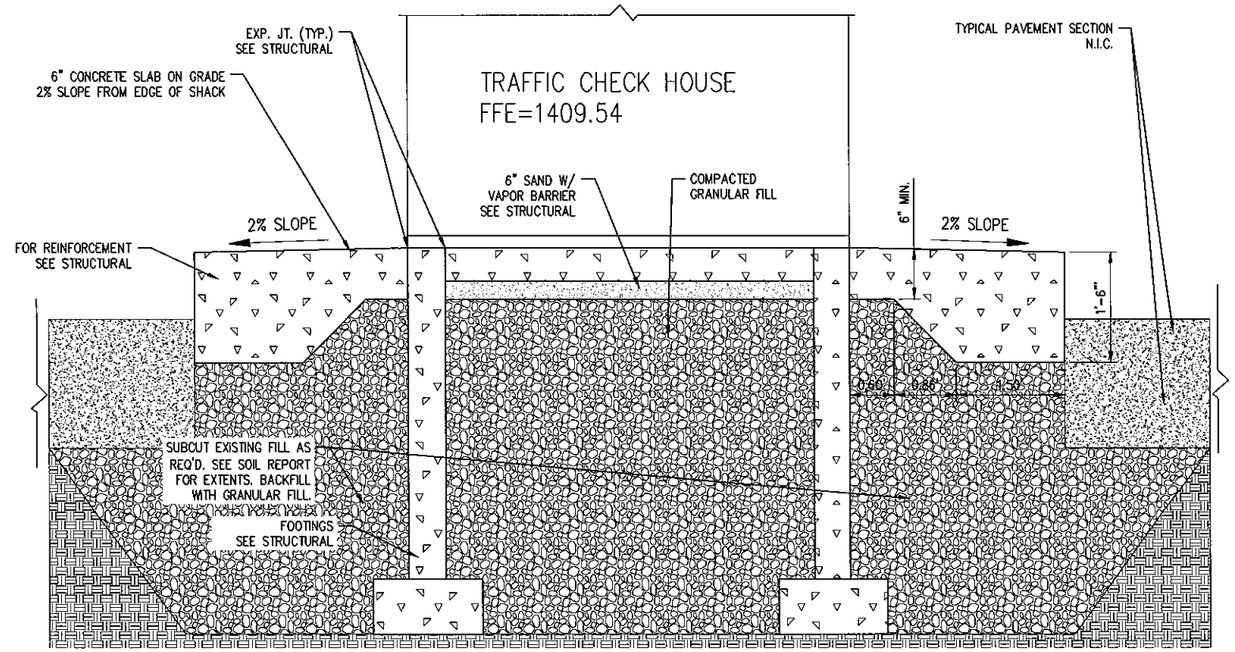

5 SECTION B-B
NOT TO SCALE

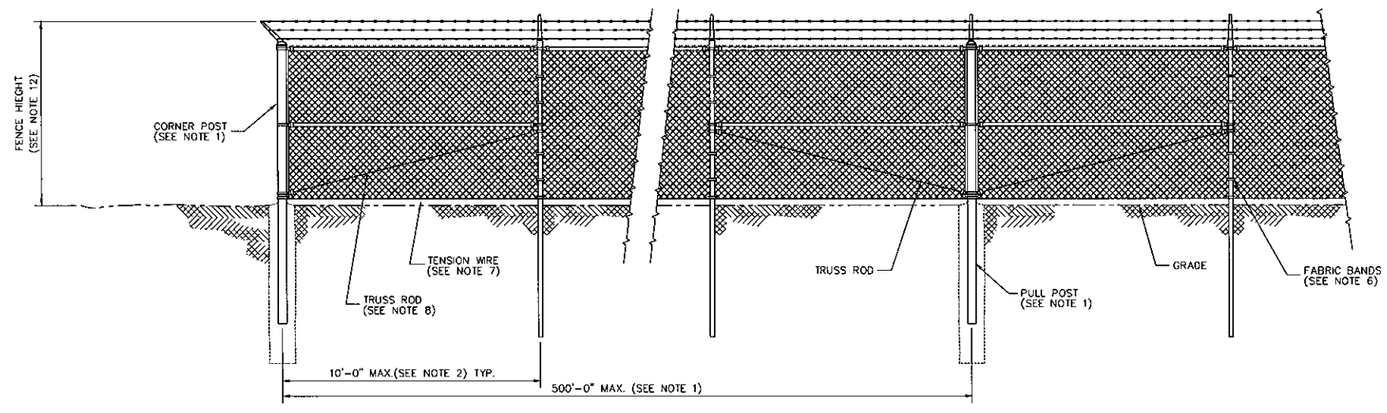

6 SECURITY FENCE DETAIL
NOT TO SCALE

1.POSTS: ALL END,CORNER,GATE AND PULL POSTS SHALL BE 3" O.D. 11'-0" LONG GALVANIZED PIPE (SCH.40) AND SHALL CONFORM TO THE LATEST ASTM DESIGNATION. POSTS SHALL BE SET 4'-6" IN A 6' DEEP, 12" O.D. CONCRETE FOOTING. PULL POSTSPACING SHALL NOT EXCEED 500'.

GATE POSTS:

WIDTH	PIPE DIA.	PIPE LENGTH
SWINGING GATE LESS THAN 7'	3"	11'-0"
7' TO 13'-0"	4"	11'-0"
13'-0" TO 18'-0"	6"	11'-0"
OVER 18'-0"	8"	11'-0"
ROLLING GATE POST ALL	4"	11'-0"

2.LINE POSTS: SHALL BE 2.0 OZ. GALVANIZED COATED C-SECTION (1.875"X 1.625", 2.30 #/FT.) OR 2 1/2" SCH. 40 PIPE (3.65 #/FT.) DRIVE SET – DRIVEN A MINIMUN OF 5' DEEP CONCRETE SET – CONCRETE SHALL BE 10" DIA. (MIN.) X 3'-6" DEEP.

3.BARBED WIRE: SHALL BE THREE 12 1/2 GAUGE GALVANIZED COATED STRANDED LINE WIRE. BARBS TO BE 14 GAUGE GALVANIZED IN A 4 POINT PATTERN ON 5" CENTERS.

4.BARBED ARMS: GALVANIZED 45° ARMS TO CARRY THREE STRANDS OF BARBED WIRE. TOP WIRE TO BE APPROXIMATELY 12" ABOVE FABRIC AND 12" OUT FROM FENCE LINE.

5.FABRIC: FABRIC SHALL BE 9 GAUGE 1.2 OZ GALVANIZED COATED CHAIN LINK WITH 2" MESH AND SHALL CONFORM TO THE LATEST ASTM DESIGNATION. TOP OF FABRIC BARBED, BOTTOM KNUCKLED.

6.FABRIC BANDS: BANDS SPACED 14" O.C. ON POSTS AND TIE WIRED EVERY 18" MINIMUM O.C. ON RAILS.

7.TENSION WIRE: 7 GAUGE GALVANIZED COATED SECURED WITH HOG RINGS EVERY 18" , BOTTOM ONLY.

8.TOP RAIL & BRACES: SHALL BE 2.0 OZ. GALVANIZED COATED C-SECTION (1.625" X 1.25" 1.35 #/FT.) OR 1 5/8" SCH. 40 PIPE (2.27 #/FT.). BRACE ASSEMBLY INCLUDES A 3/8" TRUSS ROD.

9.FITTINGS: ALL FITTINGS SHALL BE GALVANIZED STEEL PER ASTM A-123 OR A-153 (WHICHEVER IS APPLICABLE). ALL BOLTED FITTINGS TO BE INSTALLED SO AS TO PREVENT TAMPERING FROM OUTSIDE THE FENCED AREA.

10.GATES: GATE FRAMES SHALL BE 2" GALVANIZED PIPE WELDED AT EACH CORNER WITH ADDITIONAL HORIZONTAL & VERTICAL MEMBERS TO INSURE PROPER GATE OPERATION AND FOR ATTACHMENT OF FABRIC, HARDWARE AND ACCESSORIES. WELDED JOINTS SHALL BE WIRE BRUSHED CLEAN AND PRIMED WITH A COAT OF ZINC OXIDE. FINISH COAT SHALL BE ALUMUNUM PAINT 65% BY WEIGHT OF PURE ALUMINUM FLAKES. REFER TO ELECTRICAL SPECIFICATIONS FOR MAGNETIC GATE LOCK REQUIREMENTS

THE PED. GATE SHALL HAVE A 270° SWING. SWINGING GATES SHALL HAVE A CENTER PLUNGER ROD WITH DOUBLE LATCH & HAVE A 270° SWING. CONTRACTOR SHALL PROVIDE A SHOP DRAWING FOR THE PEDESTRIAN GATE.

11.GATE WIDTH: PEDESTRIAN GATES TO BE 4'-0" WIDE UNLESS SPECIFIED.

12.HEIGHT: FENCE TO STAND 7'-0" ABOVE GRADE WHEN ERECTED (INCLUDING BARBED WIRE).

LHB
PERFORMANCE DRIVEN DESIGN.
LHBcorp.com
21 W. Superior St., Ste 500 | Duluth, MN 55802 | 218.727.8446

CLIENT:
148th FIGHTER WING
MINNESOTA AIR NATIONAL GUARD

DULUTH IAP, MINNESOTA

THIS SQUARE APPEARS 1/2"x1/2" ON FULL SIZE SHEETS

NO	DATE	ISSUED FOR

NO	DATE	REVISION
	8/13/15	BID
	8/13/15	TYPE B3 FINAL SUBMITTAL

I HEREBY CERTIFY that this plan, specification or report was prepared by me or under my direct supervision and that I am a duly Licensed Professional Engineer under the laws of the State of Minnesota.

SIGNATURE: Daniel G. Shaw

TYPED OR PRINTED NAME: DANIEL G. SHAW

DATE: 8/13/15 REG. NO.: 41423

COPYRIGHT 2014 BY LHB, INC. ALL RIGHTS RESERVED.

PROJECT NAME:
RIDGEVIEW ROAD INFRASTRUCTURE

FMKM062039B

DRAWING TITLE:
Site Notes & Details

FILE:
DRAWN BY: DRP
CHECKED BY: DGS
PROJ. NO: 120094
DRAWING NO: C4.00

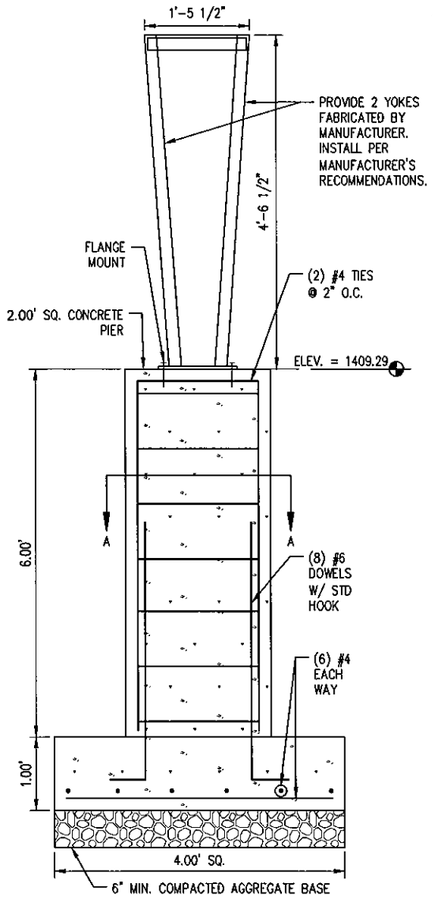

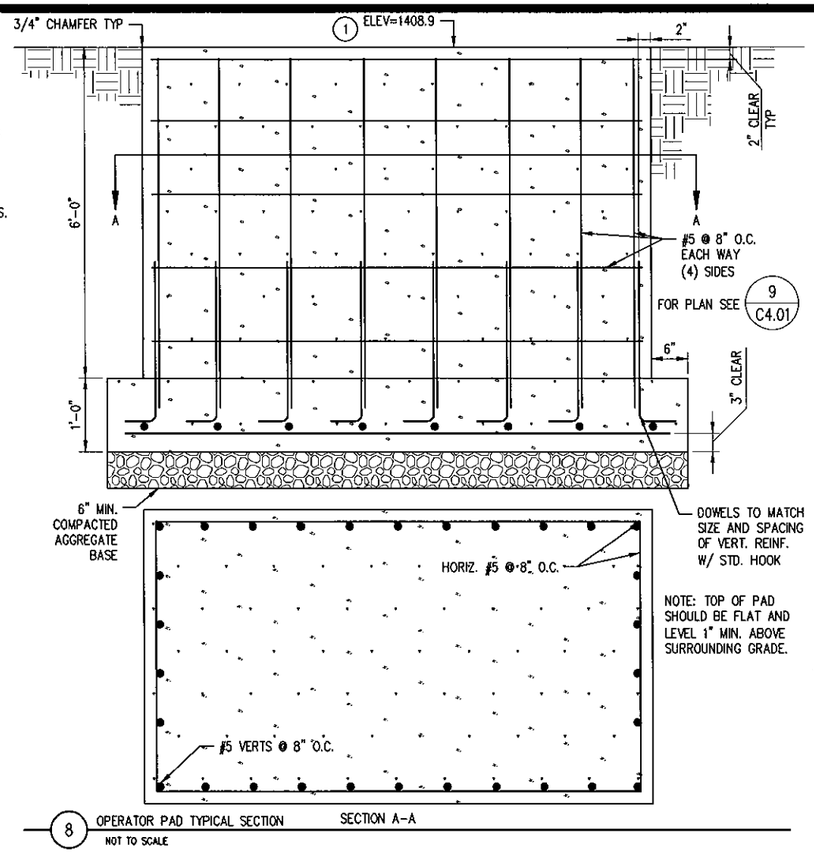

8 OPERATOR PAD TYPICAL SECTION
NOT TO SCALE

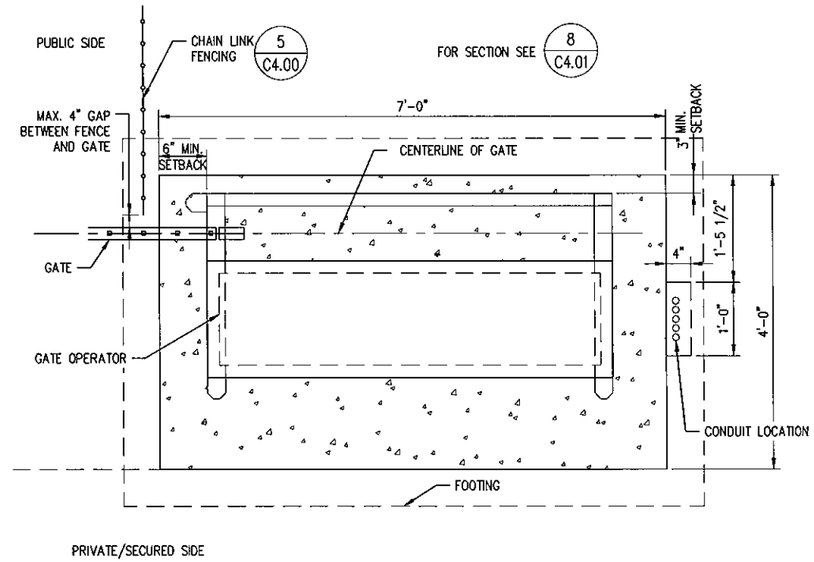

9 RIGHT OPERATOR PAD PLAN
NOT TO SCALE

NOTE: RIGHT/LEFT CONVENTION IS BASED ON VIEW FROM SECURE SIDE OF GATE

KEYNOTES:
1. CONTRACTOR SHALL ENSURE A MAXIMUM GAP OF NO MORE THAN 4" BETWEEN CLOSED FENCE GATES. THIS SHALL BE ACCOMPLISHED BY MAKING REASONABLE ADJUSTMENTS TO GATE OPERATOR FOUNDATION ELEVATIONS AND LOCATIONS. CONTRACTOR SHALL ALSO ENSURE A MAXIMUM GAP OF NO MORE THAN 8" BETWEEN THE BOTTOM OF CLOSED FENCE GATES AND PAVEMENT.

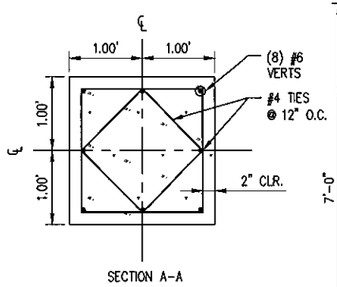

7 GATE YOKE DETAIL
NOT TO SCALE

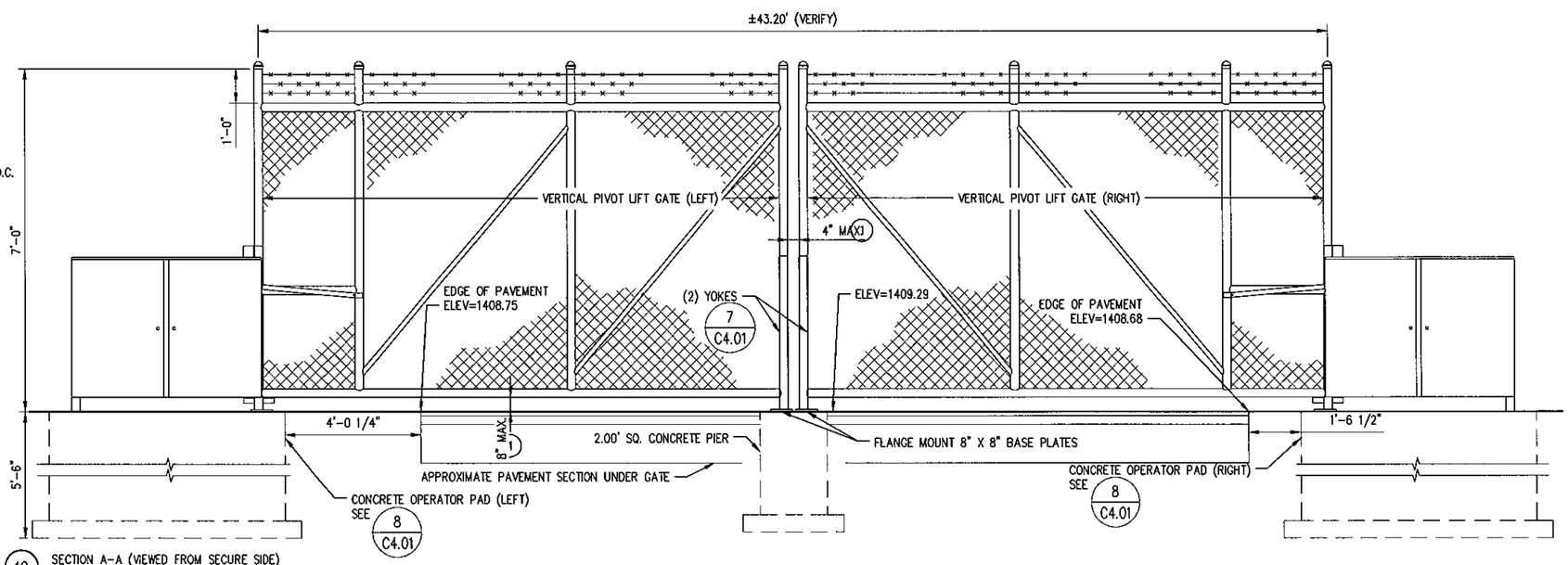

10 SECTION A-A (VIEWED FROM SECURE SIDE)
NOT TO SCALE

LHB
PERFORMANCE DRIVEN DESIGN.
LHBcorp.com
21 W. Superior St., Ste 500 | Duluth, MN 55802 | 218.727.8446

CLIENT:
148th FIGHTER WING
MINNESOTA AIR NATIONAL GUARD

DULUTH IAP, MINNESOTA

THIS SQUARE APPEARS 1/2"x1/2" ON FULL SIZE SHEETS

NO	DATE	ISSUED FOR
	8/13/15	BID
	8/13/15	TYPE B3 FINAL SUBMITTAL

NO	DATE	REVISION

I HEREBY CERTIFY that this plan, specification or report was prepared by me or under my direct supervision and that I am a duly Licensed Professional Engineer under the laws of the State of Minnesota.

SIGNATURE: Daniel G Shaw

TYPED OR PRINTED NAME: DANIEL G. SHAW

DATE: 8/13/15 REG. NO.: 41423

COPYRIGHT 2014 BY LHB, INC. ALL RIGHTS RESERVED.

PROJECT NAME:
RIDGEVIEW ROAD INFRASTRUCTURE

FMKM062039B

DRAWING TITLE:
LIFT GATE DETAILS

FILE:
DRAWN BY: DRP
CHECKED BY: DGS
PROJ. NO: 120054
DRAWING NO:

C4.01

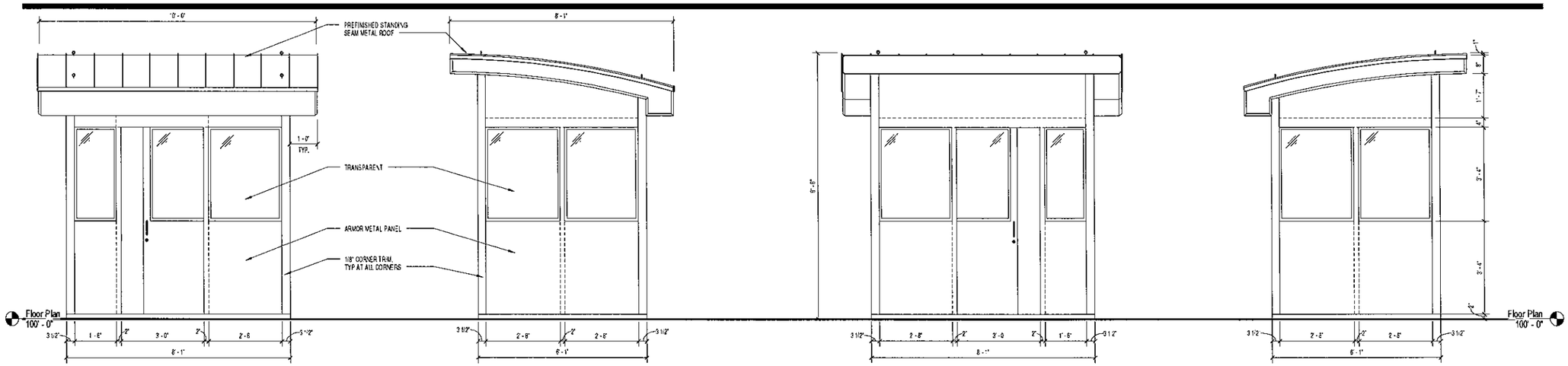

2 South Elevation 1/2" = 1'-0"

3 West Elevation 1/2" = 1'-0"

4 North Elevation 1/2" = 1'-0"

5 East Elevation 1/2" = 1'-0"

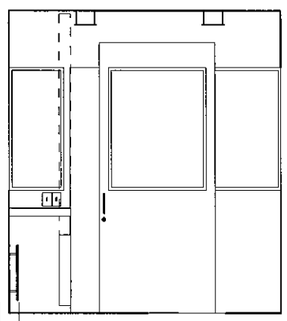

6 Interior Elevation - South 1/2" = 1'-0"

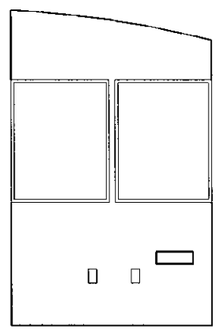

9 Interior Elevation - West 1/2" = 1'-0"

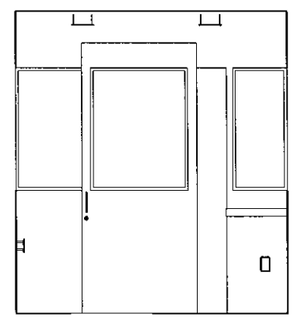

10 Interior Elevation - North 1/2" = 1'-0"

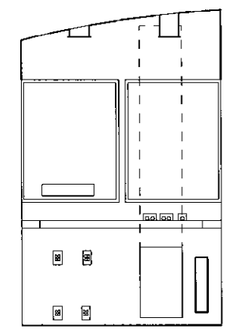

11 Interior Elevation - East 1/2" = 1'-0"

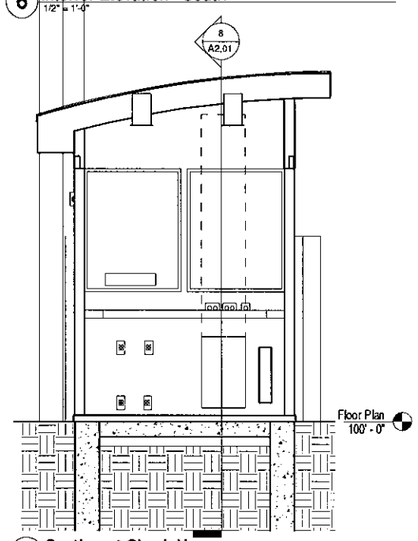

7 Section at Check House 1/2" = 1'-0"

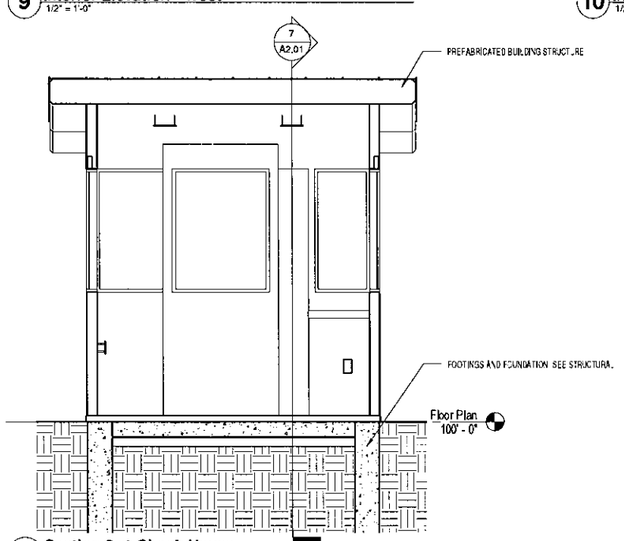

8 Section 2 at Check House 1/2" = 1'-0"

*DESIGNED TO MEET:
-UL DESIGN 752 LEVEL 5 CONSTRUCTION
*SEE SPECIFICATION

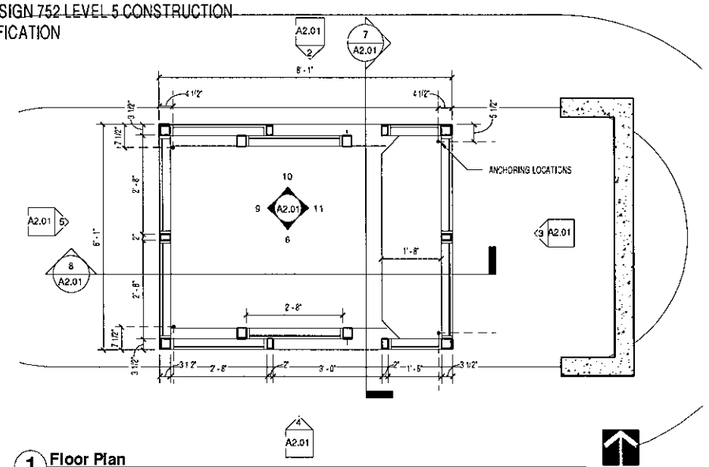

1 Floor Plan 1/2" = 1'-0"

C:\Users\dgs\Documents\120094 Ridgeview Entry Road A14 Central_bmander.rvt
8/6/2015 3:18:21 PM

LHB
PERFORMANCE DRIVEN DESIGN.
LHBcorp.com
21 W. Superior St., Ste 500 | Duluth, MN 55802 | 218.727.8446

CLIENT
148th FIGHTER WING
MINNESOTA AIR NATIONAL GUARD

DULUTH IAP, MINNESOTA

THIS SQUARE APPEARS 1'2"x1'2" ON FULL SIZE SHEETS

NO	DATE	ISSUED FOR
	8/13/15	BID
	8/13/15	TYPE B3 FINAL SUBMITTAL

NO	DATE	REVISION

I HEREBY CERTIFY that this plan, specification or report was prepared by me or under my direct supervision and that I am a duly Licensed Architect under the laws of the State of Minnesota.

Signature: Craig Schneider
Typed or Printed Name: CRAIG SCHNEIDER
Date: 8.13.'14 Reg. No.: 20160

COPYRIGHT 2014 BY LHB INC. ALL RIGHTS RESERVED.

PROJECT NAME
RIDGEVIEW ROAD INFRASTRUCTURE

FMKM062039B

DRAWING TITLE:
TRAFFIC CHECK HOUSE

FILE: Q:\12Proj\120094 EDG Drawings\E\120094 Ridgeview Entry Road E13 Central.rvt
DRAWN BY: D.B
CHECKED BY: CIP
PROJ. NO: 120094
DRAWING NO: A2.01

GENERAL DESIGN AND CONSTRUCTION NOTES

A. BUILDING CODE

1. 2015 MINNESOTA STATE BUILDING CODE (MSBC).
2. 2012 INTERNATIONAL BUILDING CODE (IBC).
3. UFC 4-010-01, DoD MINIMUM ANTI-TERRORISM STDS, DATED 9 FEBRUARY, 2012.
4. ANG DESIGN POLICY ETL 01-1-1, 2004.

B. DESIGN LOADS

1. FLOOR LIVE LOAD:

	UNIFORM (PSF)	CONCENTRATED (LB)
OFFICES:	50*	2000
BUILDING ROOF COLLATERAL LOAD:	10	

* ADD 15 PSF PARTITION LOADING FOR OFFICES.

2. ROOF LIVE LOAD: 20 PSF
3. ROOF SNOW LOAD: 60 PSF GROUND SNOW PLUS SNOW ACCUMULATION PER IBC AND ASCE 7-10. SECTIONS 7.5, 7.6, AND 7.7.
   a. FLAT ROOF SNOW LOAD, Pf = 55.4 PSF
   b. SNOW EXPOSURE FACTOR, Ce = 1.0
   c. SNOW IMPORTANCE FACTOR, Is = 1.1
   d. THERMAL FACTOR, Ct = 1.2
4. WIND LOAD. 120 MPH ULTIMATE (3 SEC. GUST), EXPOSURE C, INTERNAL PRESSURE COEFFICIENT +/-0.18

COMPONENTS AND CLADDING WIND PRESSURES

TRIBUTARY AREA	0-10 FT²	10-50 FT²	>50 FT²
ROOF NEGATIVE:			
AREA 1:	35.1 PSF	33.0 PSF	32.1 PSF
AREA 2:	58.9 PSF	44.3 PSF	38.1 PSF
AREA 3:	88.6 PSF	53.3 PSF	38.1 PSF
ROOF POSITIVE:	16.0 PSF	16.0 PSF	16.0 PSF

TRIBUTARY AREA	0-10 FT²	10-100 FT²	>100 FT²
WALLS NEGATIVE:			
AREA 4:	34.8 PSF	30.1 PSF	26.8 PSF
AREA 5:	42.8 PSF	33.4 PSF	26.8 PSF
WALLS POSITIVE:			
AREA 4 & 5:	32.1 PSF	27.1 PSF	24.1 PSF

a. REFER TO WIND PRESSURE DIAGRAM FOR ZONES.
b. DIMENSION "a" = 3.0 FT.

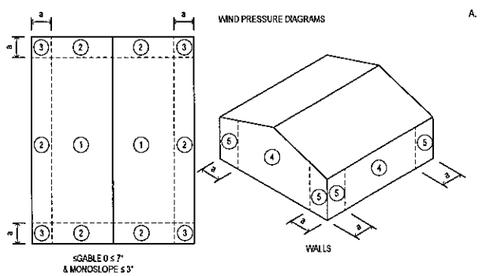

WIND PRESSURE DIAGRAMS

WALLS

≤GABLE 0 ≤ 7°
& MONOSLOPE ≤ 3°

5. EARTHQUAKE DESIGN DATA: NOT APPLICABLE (MSBC).
6. LOADS PROVIDED ON DRAWINGS ARE UNFACTORED ALLOWABLE STRESS DESIGN LOADS. 1.33 ALLOWABLE STRESS INCREASE FOR SHORT-TERM LOADING IS NOT ALLOWED.

GENERAL CONSTRUCTION NOTES

A. FOOTINGS AND FOUNDATION

1. SOIL DESIGN NET ALLOWABLE BEARING CAPACITY IS 2500 PSF IN ACCORDANCE WITH THE GEOTECHNICAL REPORT NO. 07-05347 DATED JANUARY 17, 2014 BY AMERICAN ENGINEERING TESTING, INC. NOTIFY ENGINEER OF RECORD OF ANY POOR SOIL CONDITIONS ENCOUNTERED.
2. BOTH SIDES OF FOUNDATION WALLS SHALL BE BACKFILLED SIMULTANEOUSLY SO AS TO PREVENT OVERTURNING OR LATERAL MOVEMENT OF WALLS. BACKFILLING OF BASEMENT WALLS SHALL NOT COMMENCE UNTIL FLOOR SYSTEMS TOP AND BOTTOM ARE IN PLACE, CURED 7 DAYS, AND ALL NECESSARY BRACING HAS BEEN INSTALLED.
3. FOUNDATIONS SHALL BEAR ON UNDISTURBED, UNFROZEN SUBGRADE, EXCEPT WHERE COMPACTED SUBGRADE OR FILL IS OTHERWISE SPECIFIED, OR FOUNDATIONS BEAR ON ROCK.
4. SEE DRAWINGS FOR DRAIN TILE LOCATIONS.
5. PROVIDE STANDARD 90 DEGREE HOOK DOWELS BETWEEN FOUNDATIONS AND WALLS EQUAL TO THE SIZE AND SPACING OF THE VERTICAL REINFORCING UNLESS SPECIFICALLY NOTED OTHERWISE.
6. RIGID INSULATION SHALL BE EXTRUDED POLYSTYRENE MEETING ASTM C578-08, TYPE IV, 25 PSI MINIMUM COMPRESSIVE RESISTANCE. MANUFACTURED FOR USE BELOW GRADE. PLACE ALL RIGID INSULATION IN TWO EQUAL THICKNESS LAYERS AND STAGGER JOINTS.
7. DRAIN TILE SHALL BE MINIMUM 4" PERFORATED PVC OR CORRUGATED POLYETHYLENE DRAINAGE PIPE SURROUNDED WITH DRAINAGE FILL CONFORMING TO MnDOT 3149.2H COARSE FILTER AGGREGATE AND GEOTEXTILE FABRIC. SEE CIVIL DRAWINGS FOR DRAIN TILE ROUTING.
8. SEE CIVIL, MECHANICAL, AND ELECTRICAL DRAWINGS FOR ALL UNDERSLAB UTILITIES, WATER MAINS, ETC.

B. CONSTRUCTION NOTES

1. ALL DIMENSIONS INVOLVING COORDINATION OF NEW WORK WITH EXISTING CONSTRUCTION SHALL BE FIELD-CHECKED BY THE CONTRACTOR AND FURNISHED TO THE SUBCONTRACTORS PRIOR TO FABRICATION OF ANY WORK. THE VERIFIED DIMENSIONS SHALL APPEAR AND BE NOTED ON THE SHOP DRAWINGS SUBMITTED.
2. THE CONTRACTOR IS RESPONSIBLE FOR THE PROTECTION OF EXISTING BUILDINGS, UTILITIES, STREETS, ETC. DURING CONSTRUCTION. CONTRACTOR IS RESPONSIBLE FOR DESIGN AND INSTALLATION OF ALL NECESSARY TEMPORARY BRACING.
3. ANY HOLES CUT IN NEW OR EXISTING CONSTRUCTION THAT ARE NOT DETAILED ON THE STRUCTURAL DRAWINGS SHALL BE REVIEWED WITH THE STRUCTURAL ENGINEER. COORDINATE ALL HOLES AND PENETRATIONS WITH OTHER DISCIPLINES.
4. THE STRUCTURE SHALL BE ADEQUATELY BRACED AND SHORED DURING CONSTRUCTION AGAINST WIND, ERECTION AND OTHER LOADS. STRUCTURAL MEMBERS ARE DESIGNED FOR IN-PLACE LOADS BASED ON FINAL SUPPORT CONDITIONS.
5. THE CONTRACTOR SHALL NOTIFY THE ENGINEER IMMEDIATELY OF DISCREPANCIES FOUND BETWEEN CONSTRUCTION DOCUMENTS AND ACTUAL FIELD CONDITIONS.
6. CONTRACTOR SHALL SUBMIT PLANS FOR WINTER CONSTRUCTION, IF APPLICABLE, TO BE REVIEWED BY THE ARCHITECT AND STRUCTURAL ENGINEER OF RECORD. THE PLANS SHALL INCORPORATE MEANS AND METHODS TO PREVENT DETRIMENTAL FROST PENETRATION AND FREEZING OF CONCRETE AND MORTAR.

C. QUALITY ASSURANCE AND CONTROL

1. SEE PROJECT "SPECIAL STRUCTURAL TESTING AND INSPECTION SUMMARY SCHEDULE".
2. SUBMITTALS:
   a. CONCRETE MIX DESIGN FOR EACH TYPE OF CONCRETE.
   b. PRODUCT DATA FOR CONCRETE ADMIXTURES.
   c. SHOP DRAWINGS FOR CONCRETE REINFORCING.
   d. SHOP DRAWINGS FOR STRUCTURAL STEEL.
   e. WELDER CERTIFICATION.

D. USE OF DRAWINGS

1. DETAILS NOTED TYPICAL APPLY TO ALL SIMILAR CONDITIONS, WHERE NO SPECIFIC DETAILS ARE SHOWN, CONSTRUCTION SHALL CONFORM TO SIMILAR WORK ELSEWHERE ON THE PROJECT.
2. WHERE DISCREPANCIES OCCUR WITHIN THE CONTRACT DOCUMENTS, THE MOST COSTLY REQUIREMENT IS TO BE MET.

CAST-IN-PLACE CONCRETE

A. MATERIAL PROPERTIES

1. CONCRETE PROPERTIES:

	f'c (PSI) 28 DAYS	EXPOSURE CLASS	MAX. SLUMP INCHES	MAX AGGR.	ENTR. AIR (%)	MAX. W/C
FOOTINGS:	4,000	F0	4	3/4"	0	0.45
PIERS, WALLS, GRADE BEAMS:	4,500	F2	4	3/4"	0	0.45
INT. SLAB ON GRADE (NW):	4,000	F0	4	3/4"	0	0.45
STOOPS, APRONS:	4,500	F3	4	3/4"	6 ± 1.5	0.45

* USE 6%±1.5% ENTRAINED AIR IF EXTERIOR CONCRETE.
** USE WELL-GRADED AGGREGATE AND LOW CEMENT CONTENT IN MIX.

2. REINFORCING PROPERTIES:

	FY (PSI)	ASTM
ALL BARS UNLESS NOTED OTHERWISE:	60,000	A615
TIES & STIRRUPS:	60,000	A615
WELDED WIRE FABRIC (SMOOTH, SHEETS):	65,000	A185
SYNTHETIC FIBERS (SEE NOTE 3):	1.5 LB/CY (MIN.)	

3. SYNTHETIC FIBERS, WHERE NOTED ON PLANS, SHALL BE CAPROLAN RC (NYLON), FIBERMESH 150 OF 300 (POLYPROPYLENE) OR APPROVED SIMILAR PRODUCT.
4. CHAIRS AND BOLSTERS SHALL BE PLASTIC OR EPOXY COATED.
5. IF CONCRETE SUPPORT BLOCKS ARE USED, THEIR STRENGTH SHALL BE EQUAL OR GREATER THAN THAT OF THE CONCRETE BEING PLACED.
6. THE FOLLOWING MATERIALS SHALL NOT EXCEED THE FOLLOWING PERCENT OF TOTAL CEMENTITIOUS MATERIAL BY WEIGHT:

   FLY ASH: .....15% SLABS, 25% ELSEWHERE
   GROUND GRANULATED
   BLAST FURNACE SLAG: ..... 15% IN SLABS, 50% ELSEWHERE
   FLY ASH AND SLAG COMBINED: 15% IN SLABS, 50% ELSEWHERE
   SOLUBLE CHLORIDE: 0.1%

7. CONCRETE COMPONENTS SHALL MEET THE FOLLOWING ASTM:

   PORTLAND CEMENT: .....C150, TYPE I OR III
   FINE AND COARSE AGGREGATES: C33
   FLYASH: .....C618, CLASS C OR F
   GROUND GRANULATED BLAST
   FURNACE SLAG ..... ASTM C989, GRADE 100 OR 120
   AIR ENTRAINING ADMIXTURES: C260
   OTHER CHEMICAL ADMIXTURES: .....C494, TYPE A-G
   WATER, CLEAN & NOT DETRIMENTAL TO CONCRETE .....N/A

B. FORMWORK

1. SHALL COMPLY WITH ACI 347-R, 301, AND 318.
2. FORM MATERIALS SHALL BE OF A MATERIAL AS TO PROVIDE A SMOOTH, STAIN FREE FINAL APPEARANCE & MINIMUM NUMBER OF JOINTS. PROVIDE MATERIAL WITH SUFFICIENT STRENGTH TO RESIST BOWS OR DEFLECTION.

C. CONCRETE NOTES

1. PERFORM WORK IN ACCORDANCE WITH ACI 301 AND ACI 318, AND ACI 347-R.
2. THE FOLLOWING MINIMUM CONCRETE COVER SHALL BE PROVIDED FOR REINFORCEMENT:

	MINIMUM COVER (IN.)
CONCRETE CAST AGAINST & PERMANENTLY EXPOSED TO EARTH:	3
CONCRETE EXPOSED TO EARTH OR WEATHER:	
#5 THRU #11 BARS:	2
#5 & SMALLER BARS:	1 1/2
CONCRETE NOT EXPOSED TO WEATHER OR IN CONTACT WITH GROUND:	
SLABS AND WALLS:	3/4
BEAMS AND COLUMNS:	1 1/2

3. PROVIDE A 3/4" CHAMFER ON ALL EXPOSED CONCRETE CORNERS.
4. PROVIDE LAP SPLICES AT ALL CORNERS AND INTERSECTIONS, SAME SIZE AND SPACING AS HORIZONTAL REINFORCING.
5. ALL HORIZONTAL WALL REINFORCING SHALL RUN CONTINUOUS THROUGH PIERS.
6. PROVIDE SUPPORTS AND SPACERS FOR ALL REINFORCING, INCLUDING WWF.
7. SEE ARCHITECTURAL PLANS FOR DEPRESSED AND SLOPED AREAS IN FLOORS NOT SHOWN ON STRUCTURAL DRAWINGS.
8. ALL CONCRETE SHOWN SHALL BE REINFORCED. PLANS, SECTIONS AND DETAILS SHOWN WITHOUT REINFORCEMENT ARE INTENDED TO SHOW DIMENSIONS AND DETAILS OF CONSTRUCTION ONLY. REINFORCEMENT OF THESE SECTIONS SHALL BE PROVIDED IN ACCORDANCE WITH THE DETAILS SHOWING REINFORCEMENT.
9. LAP ALL SPLICES 40 BAR DIAMETERS UNLESS NOTED OTHERWISE.
10. COORDINATE GROUNDING REQUIREMENTS BETWEEN FOUNDATION CONSTRUCTION AND ELECTRICAL WORK.
11. PROVIDE EXTRA REINFORCING ON EACH FACE AROUND ALL OPENINGS 24" OR LARGER IN ALL SLABS & WALLS EQUAL TO (2) #5 BARS ON ALL FOUR SIDES AND EXTEND 2 FEET BEYOND OPENINGS.
12. PROVIDE ISOLATION JOINTS AROUND COLUMNS, PIERS AND WALLS AT SLAB ON GRADE. SEE DETAIL 7/S2.00.
13. PROVIDE 6X6 - W2.9XW2.9 WWF FOR ALL SLABS ON GRADE U.N.O.
14. CONCRETE SLABS ON GRADE SHALL BE HAVE 15 MIL. POLY VAPOR RETARDER UNDER ALL SLABS. INSTALL THE VAPOR RETARDER DIRECTLY BELOW THE SLAB. ALL HOLES OR PENETRATIONS IN VAPOR RETARDER SHALL BE SEALED.
15. CONSOLIDATE ALL CONCRETE, INCLUDING SLABS, BY VIBRATING.
16. MIX DESIGNS SHALL INCORPORATE ADMIXTURES AS APPROPRIATE FOR ENVIRONMENTAL CONDITIONS.
17. ALL REINFORCING SHALL BE DETAILED, FABRICATED & PLACED IN ACCORDANCE WITH CRSI "MANUAL OF STANDARD PRACTICE".
18. CONCRETE SLABS SHALL NOT DEVIATE MORE THAN 1/8" IN FLATNESS IN ANY DIRECTION WHEN CHECKED WITH A 10 FOOT STRAIGHTEDGE.
19. SAWCUT OF ALL CONTROL JOINTS WITHIN 8 HOURS OF PLACEMENT. CONSTRUCTION AND CONTROL JOINTS SHALL BE AS INDICATED ON THE DRAWINGS. SEE DETAIL 6/S2.00

LHB
PERFORMANCE DRIVEN DESIGN.
LHBcorp.com
21 W. Superior St., Ste 500 | Duluth, MN 55802 | 218.727.8446

CLIENT:
148th FIGHTER WING
MINNESOTA AIR NATIONAL GUARD

DULUTH IAP, MINNESOTA

THIS SQUARE APPEARS 1/2"x1/2" ON FULL SIZE SHEETS

NO	DATE	ISSUED FOR
2	8/13/15	BID
1	8/13/15	TYPE B3 FINAL SUBMITTAL

NO	DATE	REVISION

I HEREBY CERTIFY that this plan, specification or report was prepared by me or under my direct supervision and that I am a duly Licensed Professional Engineer under the laws of the State of Minnesota.

Signature: Jennifer M. Babcock
Typed or Printed Name: JENNIFER M. BABCOCK
Date: 8/13/15 Reg. No.: 40768

COPYRIGHT 2014 BY LHB, INC. ALL RIGHTS RESERVED.

PROJECT NAME:
RIDGEVIEW ROAD INFRASTRUCTURE

FMKM062039B

DRAWING TITLE:
GENERAL NOTES

FILE: Q:\12Proj\120094\600 Drawings\E\120094 Ridgeview Entry Road E13 Central.rvt
DRAWN BY: MAS
CHECKED BY: JMB
PROJ. NO 120094
DRAWING NO. **S1.00**

C:\Users\jbb\Documents\120094 Ridgeview Entry Road S14 Central_MASCHILE.rvt
8/14/2015 6:54:31 AM

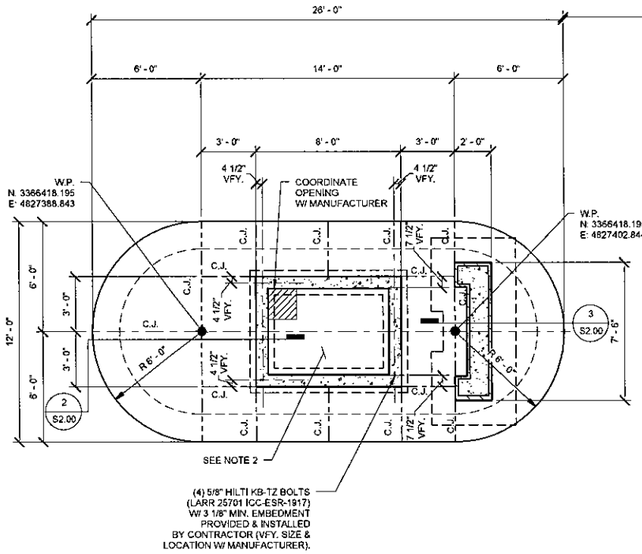

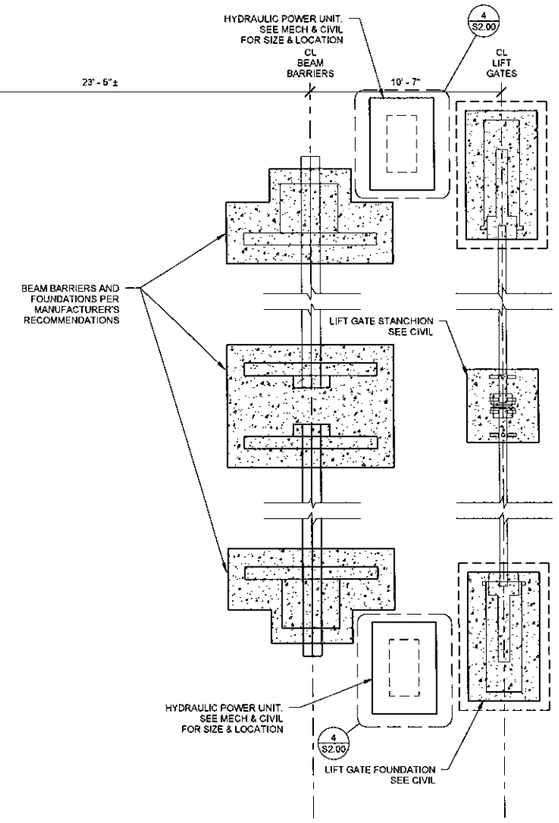

*NOTE(S):

1. SEE DETAIL 6/S2.00 FOR TYP. SLAB CONTROL JOINT (C.J.).
2. 5" SLAB ON GRADE R/W 6X6-W2.9XW2.9 WWF OVER 15 MIL. POLY VAPOR RETARDER. 6" MIN. SAND CUSHION. FFE = [100'-0"] = 1409.54 U.N.O.
3. CJ = CONTROL JOINT, SEE DETAIL 6/S2.00.

NORTH

1 FOUNDATION PLAN
1/4" = 1'-0"

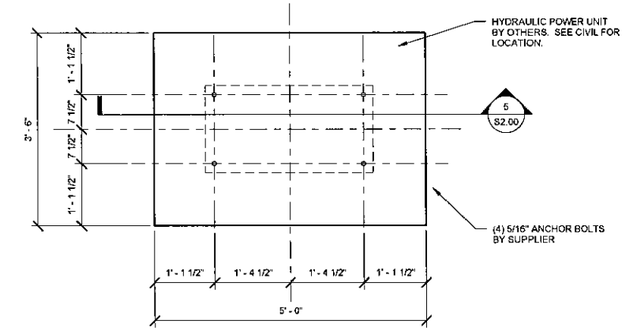

4 PLAN - HYDRAULIC POWER UNIT
3/4" = 1'-0"

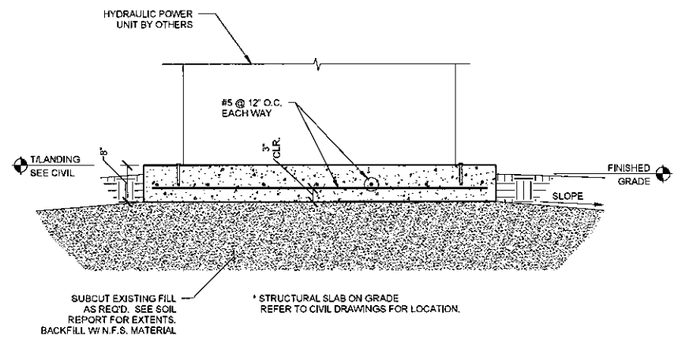

5 SECTION - HYDRAULIC POWER UNIT
3/4" = 1'-0"

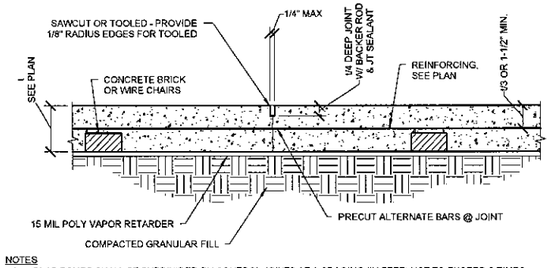

NOTES

1. SLAB POURS SHALL BE SUBDIVIDED BY CONTROL JOINTS AT A SPACING (IN FEET) NOT TO EXCEED 3 TIMES THE SLAB THICKNESS (IN INCHES) OR 20 FEET IN ANY ONE DIRECTION UNLESS NOTED ON THE PLANS.
2. CONSTRUCTION JOINTS AND CONTROL JOINTS MAY BE INTERCHANGED TO SUIT CONCRETE POUR SEQUENCE.
3. EXACT LOCATION OF CONTROL JOINTS SHALL BE ESTABLISHED PRIOR TO CUTTING OR REINFORCEMENT AND PLACING OF CONCRETE.
4. SAWING OF CONTROL JOINTS SHALL BEGIN AS SOON AS CONCRETE SURFACE HAS HARDENED SUFFICIENTLY TO PERMIT SAWING WITHOUT EXCESSIVE RAVELING AND BEFORE RANDOM SHRINKAGE CRACKS CAN FORM IN THE CONCRETE SLAB. AT WALLS OR OTHER PLACES WHERE THE SAW CANNOT ACCESS, TOOLED OR FORMED JOINTS SHALL BE PROVIDED TO JOIN THE SAW CUT JOINT AND COMPLETE THE CONTROL JOINT. CONTROL JOINTS SHALL EXTEND THROUGH CURBS CAST MONOLITHICALLY WITH THE SLAB.
5. SEE GENERAL NOTES FOR JOINT SEALANT DESCRIPTION.

6 TYPICAL SLAB CONTROL JOINT
1 1/2" = 1'-0"

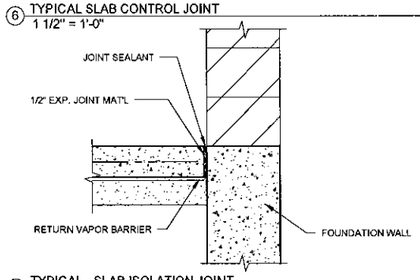

7 TYPICAL - SLAB ISOLATION JOINT
1" = 1'-0"

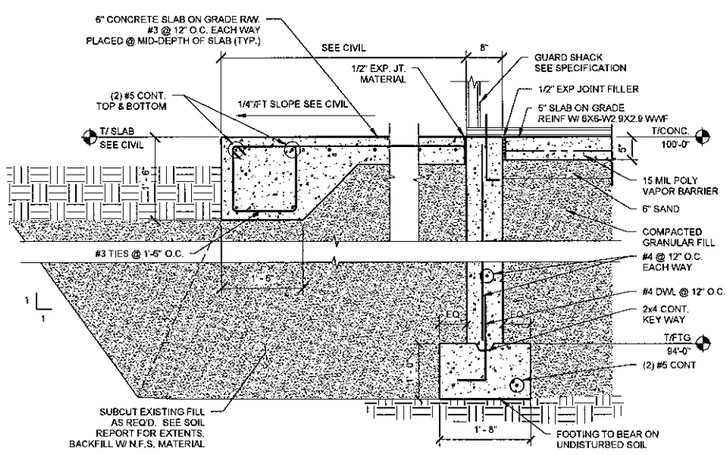

2 EXTERIOR FTG
3/4" = 1'-0"

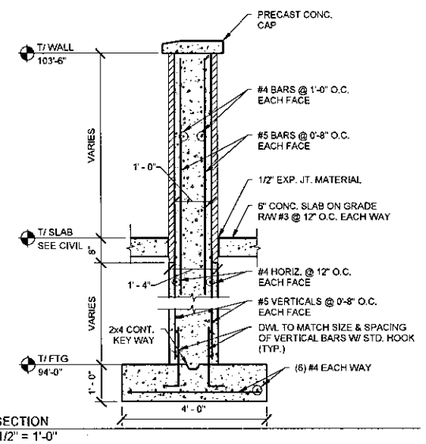

3 SECTION
1/2" = 1'-0"

PERFORMANCE DRIVEN DESIGN.
LHBcorp.com
21 W. Superior St., Ste 500 | Duluth, MN 55802 | 218.727.8446

CLIENT:
148th FIGHTER WING
MINNESOTA AIR NATIONAL GUARD

DULUTH IAP, MINNESOTA

THIS SQUARE APPEARS 1/2"x1/2" ON FULL SIZE SHEETS

NO	DATE	ISSUED FOR
2	8/13/15	BID
1	8/13/15	TYPE B3 FINAL SUBMITTAL

NO	DATE	REVISION

I HEREBY CERTIFY that this plan, specification or report was prepared by me or under my direct supervision and that I am a duly Licensed Professional Engineer under the laws of the State of Minnesota.

Signature: Jennifer M. Babcock
Typed or Printed Name: JENNIFER M. BABCOCK
Date: 8/13/15 Reg. No.: 40766

COPYRIGHT 2014 BY LHB, INC. ALL RIGHTS RESERVED.

PROJECT NAME:
RIDGEVIEW ROAD INFRASTRUCTURE

FMKM062039B

DRAWING TITLE:
FOUNDATION PLAN & DETAILS

FILE: Q:\12Proj\120094\600 Drawings\E\120094 Ridgeview Entry Road E13 Central.rvt
DRAWN BY: MAS
CHECKED BY: JMB
PROJ. NO. 120094
DRAWING NO. S2.00

C:\Users\dja\Documents\120094 Ridgeview Entry Road S14 Central_MASCHILE.rvt
8/14/2015 6:04:39 AM

ELECTRICAL SYMBOL LEGEND

HT AFF	SYMBOL	DESCRIPTION
AS NOTED		SURFACE INCANDESCENT LIGHT (TYPE DENOTED)
AS NOTED		SURFACE H.I.D. LIGHT (TYPE DENOTED)
AS NOTED		WALL MOUNTED FLOODLIGHT (TYPE DENOTED)
		RECESSED LIGHT (TYPE DENOTED)
PER SCHED		POLE MOUNTED LIGHT (TYPE DENOTED)
		SURFACE FLUORESCENT LIGHT (TYPE DENOTED)
		SUSPENDED OR PENDANT LIGHT (TYPE DENOTED)
		RECESSED FLUORESCENT LIGHT (TYPE DENOTED)
		FLUORESCENT STRIP LIGHT (TYPE DENOTED)
96"		EMERGENCY BATTERY LIGHT (TYPE DENOTED)
		EXIT SIGN (TYPE DENOTED)
AS NOTED		LIGHT FIXTURE WITH EMERGENCY BALLAST
		LIGHT ON CORD REEL (TYPE DENOTED)
AS NOTED		LIGHTING CHANNEL WIRE (TYPE DENOTED)
48"		SINGLE POLE SW.
48"		2 POLE SINGLE THROW SW.
48"		3-WAY SW.
48"		KEYED SW.
48"		SW. W/PILOT
48"		SEPARATE PILOT LIGHT
48"		DIMMER SWITCH
48"		OCCUPANCY SENSOR SWITCH
48"		VACANCY SENSOR SWITCH
48"		TIMER SWITCH
48"		MOTOR HORSEPOWER RATED SWITCH
48"		PUSH BUTTON
18"		SINGLE RECEPT.
18"		DUPLEX RECEPT.
18"		ISOLATED GROUND DUPLEX RECEPT
18"		RECEPT ON EMERGENCY CKT (DUPLEX SHOWN)
18"		FOURPLEX RECEPT.
18"		FOURPLEX RECEPTACLE ON EMERGENCY CIRCUIT
18"		ISOLATED GROUND FOURPLEX RECEPT.
18"		240 VOLT RECEPT.
		EQUIPMENT PLUG
		GROUND ROD (PLAN VIEW)
		GROUND CONNECTION - EXOTHERMIC WELD
		UTILITY SERVICE POWER POLE (SITE)
AS NOTED		SPECIAL RECEPT. OR CONN. (SEE SCHEDULE)
		SPECIAL CONNECTION (SEE SCHEDULE)
AS NOTED		JUNCTION BOX
		PULL BOX
72"**		CIRCUIT BREAKER PANEL
72"**		POWER OR DISTRIBUTION PANEL
72"**		SPECIAL CABINET (TYPE DENOTED)
		TRANSFORMER (TYPE DENOTED)
		GENERATOR (KVA DENOTED)
		MOTOR (SEE SCHEDULE)

HT AFF	SYMBOL	DESCRIPTION
48"		MANUAL MTR. STR. (W/OVERLOADS)
72"**		MAG. MOTOR STARTER OR CONTACTOR
72"**		COMB. MOTOR STARTER (NON-FUSED)
72"**		COMB. MOTOR STARTER (FUSED)
72"**		SAFETY DISC. SW. (NON-FUSED)
72"**		SAFETY DISC. SW. (FUSED)
72"**		RELAY
72"**		ENCLOSED CIRCUIT BREAKER
		OCCUPANCY SENSOR - TYPE DENOTED
		LIGHT LEVEL SENSOR - TYPE DENOTED
AS NOTED		PHOTOCELL
48"		TIME CONTROL SWITCH (TIME SWITCH)
48"		THERMOSTAT
PER SCHED		BASEBOARD HEATER (TYPE DENOTED)
PER SCHED		WALL HEATER (TYPE DENOTED)
		DASHED SYMBOL INDICATES EXISTING
		HATCHED SYMBOL INDICATES REMOVED
		CONDUIT CONCEALED IN WALL OR OVERHEAD
		CONDUIT CONCEALED BELOW FLOOR
		CONDUIT EXPOSED
		SURFACE RACEWAY
		CONDUIT TRANSITION UP
		CONDUIT TRANSITION DOWN
		CONDUIT STUBBED OUT
		LOW VOLTAGE POWER WIRING
		EXISTING CONDUIT
		UNDERGROUND ELECTRICAL
		UNDERGROUND COMMUNICATIONS
		UNDERGROUND CATV OR CCTV
		GROUNDING CONDUCTOR
		BRANCH CIRCUIT HOME RUN
		CONDUIT SLEEVE (SIZE DENOTED)
18"		TELEPHONE OUTLET (TYPE DENOTED)
48"***		WALL TELEPHONE OUTLET (TYPE DENOTED)
18"		INFORMATION OUTLET (TYPE DENOTED)
48"		INTERCOM OUTLET LOCATION
		OUTLET IN FLOOR (MICROPHONE SHOWN)
84"		BELL
84"		BUZZER
		CHIME
84"		SPEAKER (WALL OR CEILING MT.)
84"		HORN TYPE SPEAKER
48"		VOLUME CONTROL
		KEYED NOTE (SEE SCHEDULE)
		INTRUSION DETECTION SYSTEM CONTROL PANEL
		DURESS PUSHBUTTON
		MAGNETIC LOCK
		CARD READER
		BALANCED MAGNETIC SWITCH

ALL DISTANCES ARE TO CENTER OF DEVICE OR EQUIPMENT UNLESS OTHERWISE NOTED. DEVICES INDICATED AT 48" MAY NOT BE INSTALLED WITH ANY OPERABLE PART HIGHER THAN 48". DEVICES MAY BE INSTALLED IN CONCRETE MASONRY UNITS WITH THE TOP OF THE DEVICE AT 48".

* DISTANCE ABOVE TOP OF DOOR FRAME ** DISTANCE TO TOP OF EQUIPMENT OR DEVICE *** DISTANCE TO HIGHEST OPERABLE PART OF EQUIPMENT

**** DISTANCE BELOW CEILING ***** DISTANCE TO BOTTOM OF DEVICE

PANELBOARD IDENTIFICATION

EQUIPMENT DESIGNATION	CODE
HIGH VOLTAGE 3Ø4W, 277/480	HP4
HIGH VOLTAGE 3Ø3W, 480	HP3
LOW VOLTAGE 3Ø4W, 120/208	LP4
LOW VOLTAGE 3Ø3W, 208	LP3
LOW VOLTAGE 1Ø3W, 120/240	LP2
LOW VOLTAGE 1Ø3W, 120/208	LP1

SYSTEMS DESIGNATION	CODE
NORMAL	N
EMERGENCY	E
POWER CONDITIONED	C
ELECTRONIC GRADE	EG
UNINTERRUPTIBLE POWER SOURCE	UPS

SYSTEM DESIGNATION — FLOOR OF STRUCTURE
EQUIPMENT DESIGNATION — PANEL NO.
LP4-102

GENERAL ELECTRICAL NOTES

A. ALL CONDUCTORS OPERATING AT 50 VOLTS OR GREATER SHALL BE IN RACEWAY. ALL RACEWAY WITHIN THE STRUCTURE ABOVE THE FLOOR SLAB SHALL BE METAL. RACEWAY BELOW THE FLOOR SLAB AND UNDERGROUND RACEWAY OUTSIDE THE STRUCTURE SHALL BE PVC

B. ALL LOW VOLTAGE CABLES OR CONDUCTORS OPERATING AT LESS THAN 50 VOLTS SHALL BE IN METAL RACEWAY.

C. COORDINATE LOCATIONS OF DEVICES WITH ARCHITECTURAL ELEVATIONS AND DETAILS. ARCHITECTURAL ELEVATIONS AND DETAILS TAKE PRECEDENCE OVER LOCATIONS SHOWN ON ELECTRICAL DRAWINGS

D. WHERE CONNECTED TO A 20A, BRANCH CIRCUIT SUPPLYING AN INDIVIDUAL RECEPTACLE (SIMPLEX OR DUPLEX). THE RECEPTACLE SHALL BE RATED AT 20A.

ELECTRICAL ABBREVIATIONS LIST

1P	1 POLE (1P, 2P, 4P, ETC.)	DCP	DOMESTIC WATER CIRCULATING PUMP	HT	HEIGHT	NEMA	NATIONAL ELECTRICAL MANUFACTURER'S ASSOCIATION	SV&BD	SWITCHBOARD
A	AMPERE	DEPT	DEPARTMENT	HTG	HEATING			SYM	SYMMETRICAL
AC	ABOVE COUNTER OR AIR CONDITIONER	DET	DETAIL	HTR	HEATER			SYS	SYSTEM
		DIA	DIAMETER	HV	HIGH VOLTAGE	NFDS	NON-FUSED SAFETY DISCONNECT SWITCH	TEL	TELEPHONE
ACLG	ABOVE CEILING	DISC	DISCONNECT	HVAC	HEATING, VENTILATING AND AIR CONDITIONING			TELDATA	TELEPHONE/DATA
ADO	AUTOMATIC DOOR OPENER	DIST	DISTRIBUTION			NIC	NOT IN CONTRACT	TERM	TERMINAL
AF	AMP FRAME	DN	DOWN	HWP	HYDRONIC WATER PUMP	NL	NIGHT LIGHT	TL	TWIST LOCK
AFF	ABOVE FINISHED FLOOR	DPR	DAMPER			NO	NORMALLY OPEN	TR	TAMPER RESISTANT
AFG	ABOVE FINISHED GRADE	DS	SAFETY DISCONNECT SWITCH	IC	INTERRUPTING CAPACITY	NPF	NORMAL POWER FACTOR	T-STAT	THERMOSTAT
AFI	ARC FAULT CIRCUIT INTERRUPTER	DT	DOUBLE THROW	IG	ISOLATED GROUND	NTS	NOT TO SCALE	TTC	TELEPHONE TERMINAL CABINET
		DWG	DRAWING	IMC	INTERMEDIATE METAL CONDUIT				
AHU	AIR HANDLING UNIT			INCAND	INCANDESCENT	OH	OVERHEAD	TV	TELEVISION
AL	ALUMINUM	EC	ELECTRICAL CONTRACTOR	IR	INFRARED	OL	OVERLOADS	TVTC	TELEVISION TERMINAL CABINET
ALT	ALTERNATE	ELEC	ELECTRIC, ELECTRICAL	IW	INTERLOCK WATH				
AMP	AMPERE	ELEV	ELEVATOR			PA	PUBLIC ADDRESS	TYP	TYPICAL
AMPL	AMPLIFIER	EM	EMERGENCY	JBOX	JUNCTION BOX	PB	PULL BOX OR PUSHBUTTON		
ANN/N	ANNUNCIATOR	EMS	ENERGY MANAGEMENT SYSTEM			PE	PNEUMATIC ELECTRIC	UC	UNDER COUNTER
APPROX	APPROXIMATELY	EMT	ELECTRICAL METALLIC TUBING	KV	KILOVOLT	PED	PEDESTAL	UE	UNDERGROUND ELECTRICAL
ACOUST	ACOUSTAT	EP	ELECTRIC PNEUMATIC	KVA	KILOVOLT-AMPERE	PF	POWER FACTOR	UG	UNDERGROUND
ARCH	ARCHITECT, ARCHITECTURAL	EQUIP	EQUIPMENT	KVAR	KILOVOLT-AMPERE REACTIVE	PH	PHASE	UH	UNIT HEATER
AS	AMP SWITCH	EWC	ELECTRIC WATER COOLER	KW	KILOWATT	PIV	POST INDICATING VALVE	UT	UNDERGROUND TELEPHONE
AT	AMP TRIP	EXIST	EXISTING	KWH	KILOWATT HOUR	PNL	PANEL	UTIL	UTILITY
ATS	AUTOMATIC TRANSFER SWITCH	EXH	EXHAUST			PP	POWER POLE	UV	UNIT VENTILATOR OR ULTRAVIOLET
AUTO	AUTOMATIC	EXP	EXPLOSION PROOF	LOC	LOCATE OR LOCATION	PR	PAIR		
AUX	AUXILIARY			LT	LIGHT	PRI	PRIMARY		
AV	AUDIO VISUAL	FA	FIRE ALARM	LTG	LIGHTING	PROJ	PROJECTION	V	VOLT
AWG	AMERICAN WIRE GAUGE	FABP	FIRE ALARM BOOSTER POWER SUPPLY PANEL	LV	LOW VOLTAGE	PRV	POWER ROOF VENTILATOR	VA	VOLT-AMPERES
						PT	POTENTIAL TRANSFORMER	VDT	VIDEO DISPLAY TERMINAL
BATT	BATTERY	FACP	FIRE ALARM CONTROL PANEL	MAX	MAXIMUM	PVC	POLYVINYL CHLORIDE (CONDUIT)	VERT	VERTICAL
BD	BOARD	FCU	FAN COIL UNIT	MAG S	MAGNETIC STARTER	PWR	POWER	VFD	VARIABLE FREQUENCY DRIVE
BLDG	BUILDING	FIXT	FIXTURE	MC	MOMENTARY CONTACT			VOL	VOLUME
BMS	BUILDING MANAGEMENT SYSTEM	FLR	FLOOR	MC	MECHANICAL CONTRACTOR	QUAN	QUANTITY	W	WATT
		FLUOR	FLUORESCENT	MCB	MAIN CIRCUIT BREAKER			W	WITH
		FU	FUSE	MCC	MOTOR CONTROL CENTER	RCPT	RECEPTACLE	WG	WIRE GUARD
C	CONDUIT	FUDS	FUSED SAFETY DISCONNECT SWITCH	MDC	MAIN DISTRIBUTION CENTER	REQD	REQUIRED	WH	WATER HEATER
CAB	CABINET			MDP	MAIN DISTRIBUTION PANEL	RM	ROOM	W/O	WITHOUT
CAT	CATALOG			MFR	MANUFACTURER	RSC	RIGID STEEL CONDUIT	WP	WEATHERPROOF
CATV	CABLE TELEVISION	GA	GAUGE	MFS	MAIN FUSED DISCONNECT SWITCH	RTU	ROOF TOP UNIT		
CB	CIRCUIT BREAKER	GAL	GALLON					XFMR	TRANSFORMER
CCTV	CLOSED CIRCUIT TELEVISION	GALV	GALVANIZED	MH	MANHOLE	SC	SURFACE CONDUIT	XFR	TRANSFER
CKT	CIRCUIT	GC	GENERAL CONTRACTOR	MIC	MICROPHONE	SEC	SECONDARY		
CLG	CEILING	GEN	GENERATOR	MIN	MINIMUM	SHT	SHEET		
COMB	COMBINATION	GFI	GROUND FAULT CIRCUIT INTERRUPTER	MISC	MISCELLANEOUS	SIM	SIMILAR		
CMPR	COMPRESSOR			M.O	MAIN LUGS ONLY	S/N	SOLID NEUTRAL		
CONN	CONNECTION	GFP	GROUND FAULT PROTECTOR	MWS	MANUAL MOTOR STARTER	SPEC	SPECIFICATION		
CONST	CONSTRUCTION	GND	GROUND	MOA	MULTI OUTLET ASSEMBLY	SPKR	SPEAKER		
CONT	CONTINUATION OR CONTINUOUS	GRS	GALVANIZED RIGID STEEL (CONDUIT)	MSP	MOTOR STARTER PANEL&CARD	SP	SPARE	∠	ANGLE
				MSSD	MAIN SWITCHBOARD	SR	SURFACE RACEWAY	@	AT
CONTR	CONTRACTOR	GYP BD	GYPSUM BOARD	MT	MOUNT	SS	STAINLESS STEEL	Δ	DELTA
CONV	CONVECTOR			MT.C	EMPTY CONDUIT	SSW	SELECTOR SWITCH	'	FEET
CP	CIRCULATING PUMP	HOA	HANDS-OFF-AUTOMATIC SWITCH	MTS	MANUAL TRANSFER SWITCH	S/S	STOP/START PUSH-BUTTONS	"	INCHES
CRT	CATHODE-RAY TUBE			MTR	MOTOR, MOTORIZED	STA	STATION	#	NUMBER
CT	CURRENT TRANSFORMER	HORIZ	HORIZONTAL			STD	STANDARD	Ø	PHASE
CTR	CENTER	HP	HORSEPOWER	N.C.	NORMALLY CLOSED	SURF	SURFACE MOUNTED	℄	CENTER LINE
CU	COPPER	HPF	HIGH POWER FACTOR	NEC	NATIONAL ELECTRICAL CODE	SW	SWITCH	L	PLATE

ELECTRICAL SYMBOL NOTES

A2 / 12b — THE LIGHTING FIXTURE TYPE IS INDICATED BY AN UPPER CASE LETTER. THE CIRCUIT DESIGNATION IS INDICATED BY A NUMBER. THE SWITCH DESIGNATION IS INDICATED BY A LOWER CASE LETTER.

EXAMPLE 1. LIGHTING FIXTURE TYPE "A" IS CONNECTED TO CIRCUIT 12 AND CONTROLLED BY SWITCH "b".

"P200A" / 3/N4 — EXAMPLE 2. THE FIXTURE TYPE SHOWN AS A NUMERATOR INDICATES ALL LIGHTING FIXTURES IN THE ROOM OR SPACE ARE THE SAME TYPE. THE CIRCUIT NUMBER AND SWITCH DESIGNATION SHOWN AS A DENOMINATOR INDICATES ALL LIGHTING FIXTURES IN THE ROOM OR SPACE ARE CONNECTED TO THE SAME CIRCUIT, CONTROLLED BY THE SAME SWITCHES, CENTER/OUTBOARD MULTILEVEL SWITCHING.

E / 14 — EXIT LIGHTS. STEM INDICATES WALL MOUNTING. NO STEM INDICATES CEILING MOUNTING. SHADED AREA INDICATES ILLUMINATED FACE(S). ARROW INDICATES DIRECTIONAL ARROW ON ILLUMINATED FACE(S). THE CIRCUIT DESIGNATION IS INDICATED BY A NUMBER. EXAMPLE: THE WALL MOUNTED EXIT LIGHT TYPE "E" WITH SINGLE FACE AND DIRECTIONAL ARROW IS CONNECTED TO CIRCUIT 14.

16c — DEVICES. THE CIRCUIT DESIGNATION IS INDICATED BY A NUMBER. THE SWITCH DESIGNATION IS INDICATED BY A LOWER CASE LETTER. EXAMPLE: SPLIT DUPLEX RECEPTACLE IS CONNECTED TO CIRCUIT 16 AND ONE RECEPTACLE OUTLET IS CONTROLLED BY SWITCH "c".

THE CONTROL DEVICE DESIGNATION IS INDICATED BY A LOWER CASE LETTER. EXAMPLE: SINGLE POLE SWITCH "d" TO CONTROL LIGHTING FIXTURES INDICATED BY "d".

D600 / d — WALL BOX DIMMER WITH SIZE AS INDICATED AT DEVICE. EXAMPLE: 600 WATT WALL BOX DIMMER TO CONTROL LIGHTING FIXTURES INDICATED BY "e". SEE SPECIFICATIONS FOR WATTAGE IF NOT INDICATED.

1 / 1,3,5 — SPECIAL CONNECTIONS. THE EQUIPMENT IS INDICATED BY A NUMBER IN A CIRCLE. SEE THE MOTOR AND EQUIPMENT SCHEDULE FOR THE LOAD DESCRIPTION AND TYPE OF CONNECTION. THE CIRCUIT DESIGNATION IS INDICATED BY A NUMBER(S) ADJACENT TO THE SYMBOL. EXAMPLE: EQUIPMENT NO. 1, 3 PHASE CONNECTION TO CIRCUITS 1, 3, 5.

SF-1 / 2,4,6 — MOTOR CONNECTIONS. THE MOTOR IS INDICATED BY A NUMBER WITHIN OR CHARACTERS ADJACENT TO THE MOTOR SYMBOL. SEE THE MOTOR AND EQUIPMENT SCHEDULE FOR THE MOTOR DESCRIPTION AND ELECTRICAL REQUIREMENTS. THE CIRCUIT DESIGNATION IS INDICATED BY A NUMBER(S) ADJACENT TO THE SYMBOL. EXAMPLE: MOTOR SF-1, 3 PHASE CONNECTION TO CIRCUITS 2, 4, 6

7,9 / H1 — ELECTRIC HEATER CONNECTIONS. THE HEATER TYPE IS INDICATED BY A NUMBER FOLLOWING THE UPPER CASE LETTER "H". SEE THE HEATER SCHEDULE FOR ELECTRICAL REQUIREMENTS. THE CIRCUIT DESIGNATION IS INDICATED BY A NUMBER(S) ADJACENT TO THE HEATER. EXAMPLE: ELECTRIC BASEBOARD HEATER TYPE "H1" CONNECTED TO CIRCUITS 7, 9.

T1 — TRANSFORMERS. THE TRANSFORMER TYPE IS INDICATED BY A NUMBER FOLLOWING THE UPPER CASE LETTER "T". SEE THE TRANSFORMER SCHEDULE OR THE SINGLE LINE DIAGRAM FOR THE TRANSFORMER DESCRIPTION AND REQUIREMENTS. EXAMPLE: TRANSFORMER TYPE "T1".

LPN-102 — PANELBOARDS. PANELBOARD DOORS MAY BE SHOWN TO INDICATE OPENING SIDE OF RECESSED PANELBOARDS. SEE PANELBOARD IDENTIFICATION FOR DESIGNATION CODES.

1 — SPECIAL NOTE. SEE THE SPECIAL NOTES ON THAT SHEET FOR THE NOTE NUMBER INDICATED IN THE HEXAGON.

CONDUIT SHOWN WITHOUT SLASH MARKS SHALL CONTAIN 2 # 12 CONDUCTORS IN 3/4" CONDUIT UNLESS SPECIFIC EQUIPMENT REQUIRES A DIFFERENT SIZE.

#10 — CONDUIT SHOWN WITH SLASH MARKS SHALL CONTAIN 1 # 12 CONDUCTOR PER SLASH MARK IN 3/4" CONDUIT UNLESS A CONDUCTOR AND CONDUIT SIZE IS SHOWN ADJACENT TO THE SLASH MARKS. SLASH MARK INDICATORS ARE: SHORT STRAIGHT=PHASE CONDUCTOR, LONG STRAIGHT=NEUTRAL CONDUCTOR, SHORT BENT ENDED=SWITCH LEGS, LONG STRAIGHT WITH A DOT=GROUND CONDUCTOR, CHEVRON=CATEGORY 6, HALF CHEVRON=CATEGORY 3, TWIST=SHIELDED TWISTED PAIR, CONCENTRIC CIRCLE AND DOT=COAX CABLE.

LPN-102 / 1,3,5 — HOME RUN TO BRANCH CIRCUIT PANELBOARD. THE PANELBOARD DESIGNATION IS SHOWN ADJACENT TO THE HOME RUN ARROW AS A NUMERATOR AND THE CIRCUIT DESIGNATION IS SHOWN AS THE DENOMINATOR. CIRCUIT BREAKER SIZES (AMPS/NUMBER OF POLES) ARE SHOWN IN THE PANELBOARD SCHEDULE WITH THE CORRESPONDING PANELBOARD AND CIRCUIT DESIGNATION. EXAMPLE: HOME RUN TO PANELBOARD LPN-102, CIRCUITS 1, 3, 5.

SYMBOL NOTATIONS: UPPER CASE LETTERS ADJACENT TO SYMBOLS INDICATE A UNIT TYPE. SEE APPROPRIATE SCHEDULE OR SPECIFICATIONS.

ELECTRICAL DRAWINGS

E0.01	ELECTRICAL SYMBOLS, ABBREVIATIONS, AND SCHEDULES
E1.01	ELECTRICAL SITE PLAN
E1.02	ELECTRICAL SITE PLAN
E1.03	TRAFFIC CHECK HOUSE ELECTRICAL SITE PLAN
E2.01	ELECTRICAL BUILDING PLANS
E7.01	ELECTRICAL DETAILS
E8.01	ELECTRICAL SCHEDULES
E9.01	ELECTRICAL DIAGRAMS

LHB
PERFORMANCE DRIVEN DESIGN.
LHBcorp.com
21 W. Superior St., Ste 500 | Duluth, MN 55802 | 218.727.8446

CLIENT:
148th FIGHTER WING
MINNESOTA AIR NATIONAL GUARD

DULUTH IAP, MINNESOTA

THIS SQUARE APPEARS 1/2"x1/2" ON FULL SIZE SHEETS

NO	DATE	ISSUED FOR
	8/13/15	BID
	8/13/15	TYPE B3 FINAL SUBMITTAL

NO	DATE	REVISION

I HEREBY CERTIFY that this plan, specification or report was prepared by me or under my direct supervision and that I am a duly Licensed Professional Engineer under the laws of the State of Minnesota.

Signature: Michael Bilben
Typed or Printed Name: MICHAEL STEVEN BILBEN
Date: 8/13/15 Reg. No.: 51324

COPYRIGHT 2015 BY LHB, INC. ALL RIGHTS RESERVED.

PROJECT NAME:
RIDGEVIEW ROAD INFRASTRUCTURE

FMKM062039B

DRAWING TITLE:
ELECTRICAL SYMBOLS, ABBREVIATIONS, AND SCHEDULES

FILE: Q:\12Proj\120094\600 Drawings\E-120094 Ridgeview Entry Road E14 Central.rvt
DRAWN BY: AML
CHECKED BY: LRH
PROJ. NO: 120094
DRAWING NO: **E0.01**

C:\Users\dgs\Documents\120094 Ridgeview Entry Road E14 Central_LRHemb.rvt
8/14/2015 1:56:45 PM

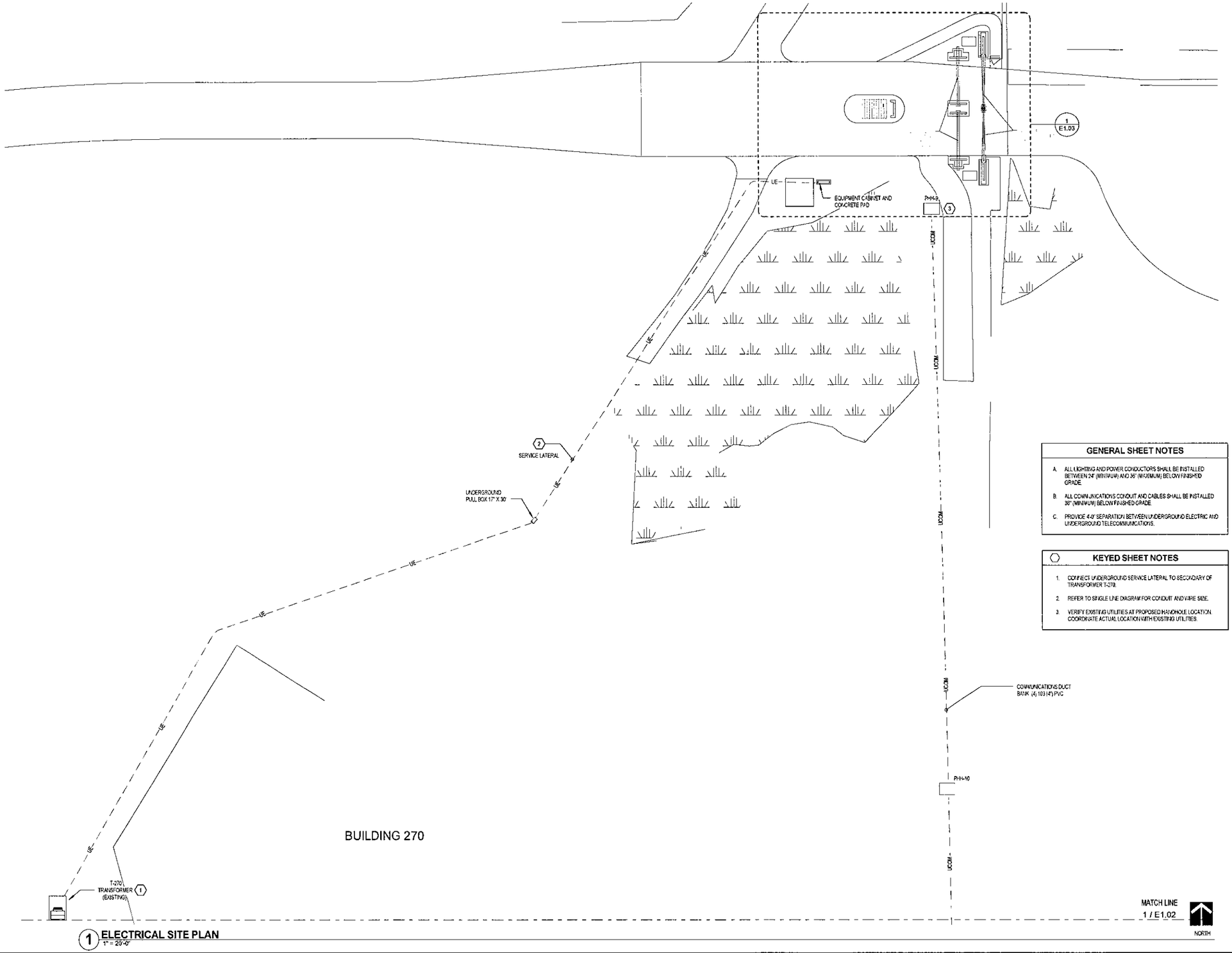

1 ELECTRICAL SITE PLAN
1" = 20'-0"

GENERAL SHEET NOTES

A. ALL LIGHTING AND POWER CONDUCTORS SHALL BE INSTALLED BETWEEN 24" (MINIMUM) AND 36" (MAXIMUM) BELOW FINISHED GRADE.

B. ALL COMMUNICATIONS CONDUIT AND CABLES SHALL BE INSTALLED 36" (MINIMUM) BELOW FINISHED GRADE.

C. PROVIDE 4'-0" SEPARATION BETWEEN UNDERGROUND ELECTRIC AND UNDERGROUND TELECOMMUNICATIONS.

KEYED SHEET NOTES

1. CONNECT UNDERGROUND SERVICE LATERAL TO SECONDARY OF TRANSFORMER T-270.
2. REFER TO SINGLE LINE DIAGRAM FOR CONDUIT AND WIRE SIZE.
3. VERIFY EXISTING UTILITIES AT PROPOSED HANDHOLE LOCATION. COORDINATE ACTUAL LOCATION WITH EXISTING UTILITIES.

LHB
PERFORMANCE DRIVEN DESIGN.
LHBcorp.com
21 W. Superior St., Ste 500 | Duluth, MN 55802 | 218.727.8446

CLIENT:
148th FIGHTER WING
MINNESOTA AIR NATIONAL GUARD

DULUTH IAP, MINNESOTA

THIS SQUARE APPEARS 1/2"x1/2" ON FULL SIZE SHEETS

NO	DATE	ISSUED FOR
	8/13/15	BID
	8/13/15	TYPE B3 FINAL SUBMITTAL

NO	DATE	REVISION

I HEREBY CERTIFY that this plan, specification or report was prepared by me or under my direct supervision and that I am a duly Licensed Professional Engineer under the laws of the State of Minnesota.

Signature: Michael Bilben

Typed or Printed Name: MICHAEL STEVEN BILBEN

Date: 8/13/15 Reg. No.: 51324

COPYRIGHT 2015 BY LHB, INC. ALL RIGHTS RESERVED.

PROJECT NAME:
RIDGEVIEW ROAD INFRASTRUCTURE

FMKM062039B

DRAWING TITLE:
ELECTRICAL SITE PLAN

FILE: Q:\12Proj\120094\600 Drawings\E\120094 Ridgeview Entry Road E14 Central.rvt
DRAWN BY: AML
CHECKED BY: LRH
PROJ. NO.: 120094
DRAWING NO.:
E1.01

C:\Users\djs\Documents\120094 Ridgeview Entry Road E14 Central_LRHelmb.rvt
8/14/2015 1:56:45 PM

GENERAL SHEET NOTES

A. ALL COMMUNICATIONS CONDUIT AND CABLES SHALL BE INSTALLED 36" (MINIMUM) BELOW FINISHED GRADE.

KEYED SHEET NOTES

1. CORE DRILL EXISTING HAND HOLE FOR (3) 103 (4") PVC CONDUITS PROVIDE BELL BUSHINGS AND SEAL.

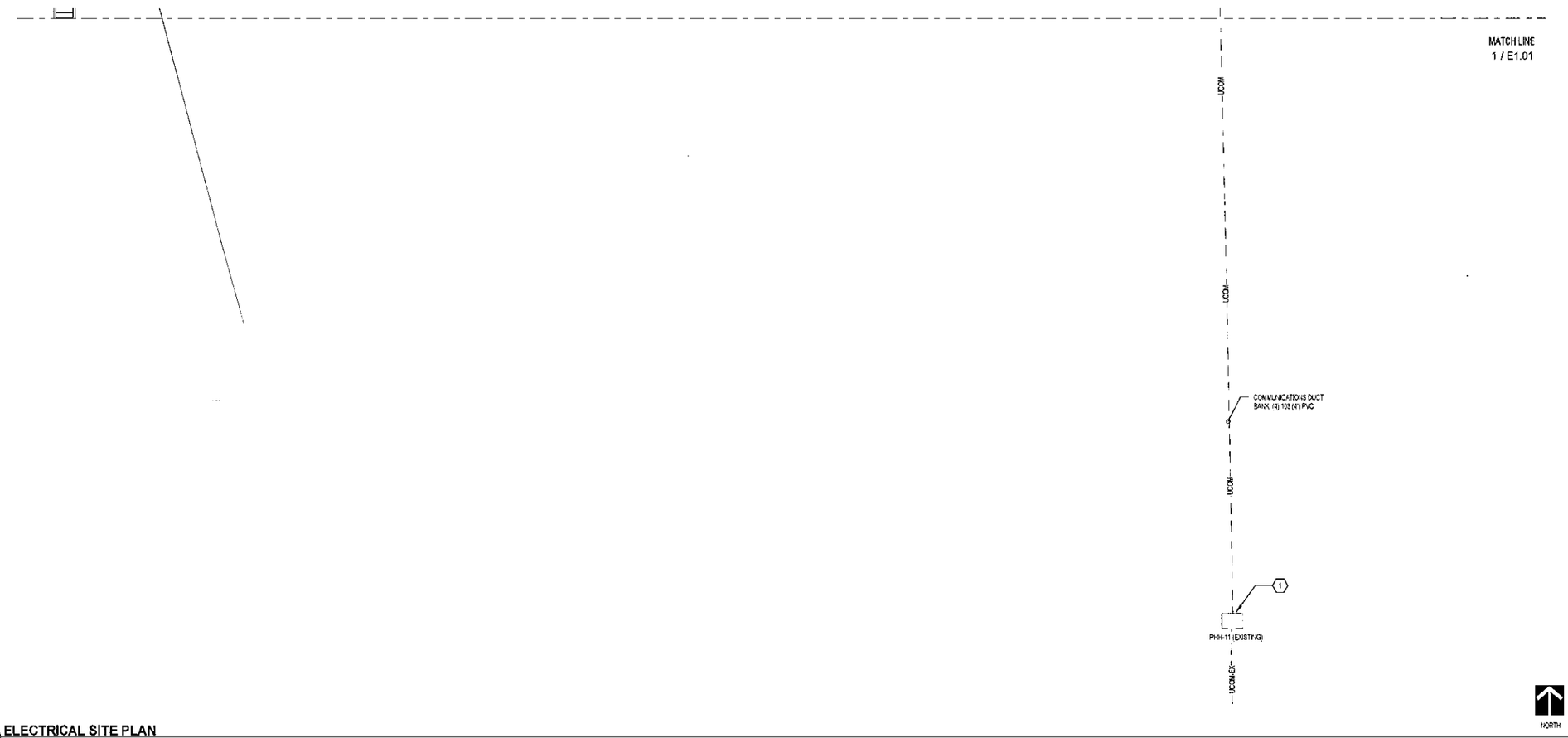

1 ELECTRICAL SITE PLAN
1" = 20'-0"

C:\Users\djs\Documents\120094 Ridgeview Entry Road E14 Central_LRHermb.rvt
8/14/2015 1:56:46 PM

LHB
PERFORMANCE DRIVEN DESIGN.
LHBcorp.com
21 W. Superior St., Ste 500 | Duluth, MN 55802 | 218.727.8446

CLIENT:
148th FIGHTER WING
MINNESOTA AIR
NATIONAL GUARD

DULUTH IAP, MINNESOTA

THIS SQUARE APPEARS 1/2"x1/2" ON FULL SIZE SHEETS

NO	DATE	ISSUED FOR
	8/13/15	BID
	8/13/15	TYPE B3 FINAL SUBMITTAL

NO	DATE	REVISION

I HEREBY CERTIFY that this plan, specification or report was prepared by me or under my direct supervision and that I am a duly Licensed Professional Engineer under the laws of the State of Minnesota.

Signature: Michael Bilben

Typed or Printed Name: MICHAEL STEVEN BILBEN

Date: 8/13/15 Reg. No.: 51324

COPYRIGHT 2015 BY LHB, INC. ALL RIGHTS RESERVED.

PROJECT NAME:
RIDGEVIEW ROAD INFRASTRUCTURE

FMKM062039B

DRAWING TITLE:
ELECTRICAL SITE PLAN

FILE: Q:\12Proj\120094\600 Drawings\E\120094 Ridgeview Entry Road E14 Central.rvt
DRAWN BY: AML
CHECKED BY: LRH
PROJ. NO. 120094
DRAWING NO

E1.02

GENERAL SHEET NOTES

A. ALL LIGHTING AND POWER CONDUCTORS SHALL BE INSTALLED BETWEEN 24" (MINIMUM) AND 36" (MAXIMUM) BELOW FINISHED GRADE.

B. ALL COMMUNICATIONS CONDUIT AND CABLES SHALL BE INSTALLED 36" (MINIMUM) BELOW FINISHED GRADE.

C. ALL CONDUCTORS FOR EXTERIOR LIGHTING AND POWER CIRCUITS SHALL BE #10 AWG MINIMUM.

D. PROVIDE TRANSFORMER BASE AT ALL POLE MOUNT FIXTURES. LOCATE LIGHT POLES 3'-0" FROM EDGE OF ROADWAY SHOULDER.

E. PROVIDE FUSES IN TRANSFORMER BASES AT ALL LIGHT POLES

KEYED SHEET NOTES

1. PROVIDE CONDUIT, BOX, AND WIRE AS NECESSARY FOR BARRIER CONTROL INTERFACE.
2. ROUTE LIGHTING BRANCH CIRCUIT THROUGH CONTACTOR CT1.
3. AT POP-UP BARRIER ACCESS BOX, PROVIDE 208V CONNECTION FOR HEATER AND 120V CONNECTION FOR TRAFFIC SIGNALS.
4. PROVIDE 2"(1") PVC FOR FUTURE LIGHT POLE, STUB OUT AND CAP.
5. PROVIDE VIP PULL BOX FOR IDS WIRING. REFER TO INTRUSION DETECTION SYSTEM AND ACCESS CONTROL WIRING DIAGRAM.
6. PROVIDE 2" (1") PVC FOR FUTURE CCTV CAMERA AT FUTURE LIGHT POLE. STUB OUT AND CAP.
7. LIGHT POLE BASE AT THIS LOCATION TO BE 8'-0" BELOW GRADE TO BOTTOM.

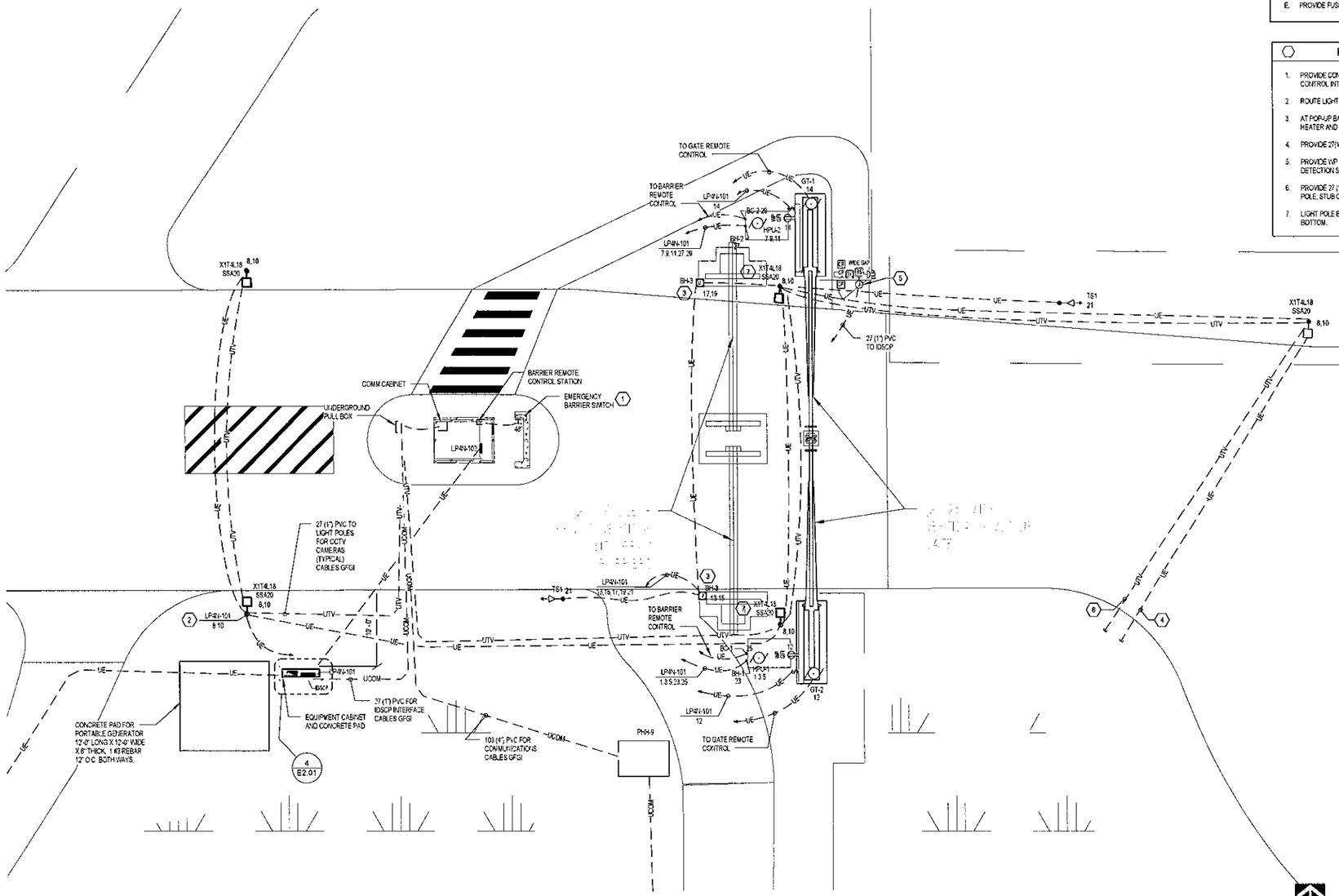

1 TRAFFIC CHECK HOUSE SITE PLAN
1/8" = 1'-0"

LHB
PERFORMANCE DRIVEN DESIGN.
LHBcorp.com
21 W. Superior St., Ste 500 | Duluth, MN 55802 | 218.727.8446

CLIENT:
148th FIGHTER WING
MINNESOTA AIR NATIONAL GUARD

DULUTH IAP, MINNESOTA

THIS SQUARE APPEARS 1/2"x1/2" ON FULL SIZE SHEETS

NO	DATE	ISSUED FOR
	8/13/15	BID
	8/13/15	TYPE B3 FINAL SUBMITTAL

NO	DATE	REVISION

I HEREBY CERTIFY that this plan, specification or report was prepared by me or under my direct supervision and that I am a duly Licensed Professional Engineer under the laws of the State of Minnesota.

Signature: Michael Bilben
Typed or Printed Name: MICHAEL STEVEN BILBEN
Date: 8/13/15 Reg. No.: 51324

COPYRIGHT 2015 BY LHB, INC. ALL RIGHTS RESERVED.

PROJECT NAME:
RIDGEVIEW ROAD INFRASTRUCTURE

FMKM062039B

DRAWING TITLE:
TRAFFIC CHECK HOUSE ELECTRICAL SITE PLAN

FILE: Q:\122Proj\120094\600 Drawings\E\120094 Ridgeview Entry Road E14 Central.rvt
DRAWN BY: AML
CHECKED BY: LRH
PROJ. NO: 120094
DRAWING NO: **E1.03**

C:\Users\kjs\Documents\120094 Ridgeview Entry Road E14 Central_LRHtemb.rvt
8/14/2015 1:55:47 PM

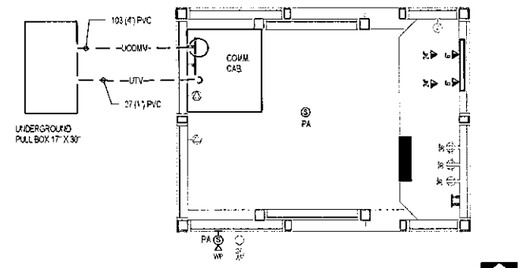

3 ELECTRICAL SYSTEMS PLAN
1/2" = 1'-0"

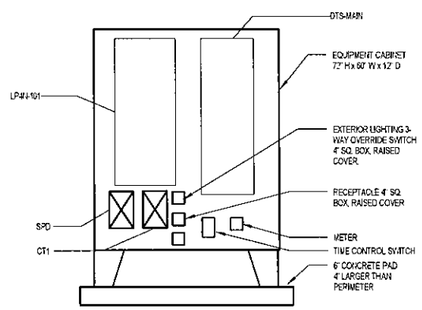

5 ELEVATION - ELECTRICAL EQUIPMENT
1/2" = 1'-0"

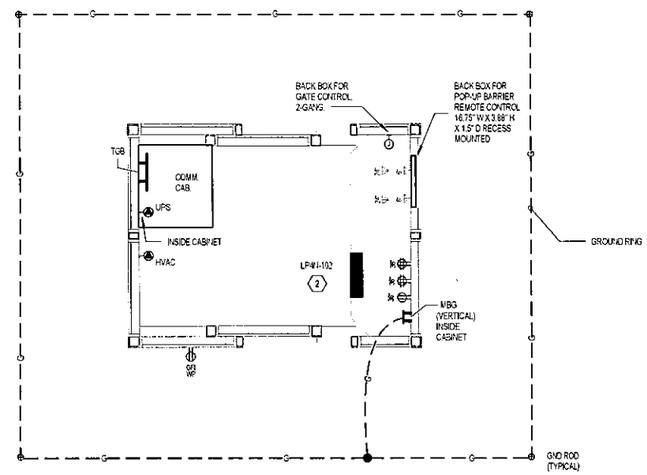

2 ELECTRICAL POWER PLAN
1/2" = 1'-0"

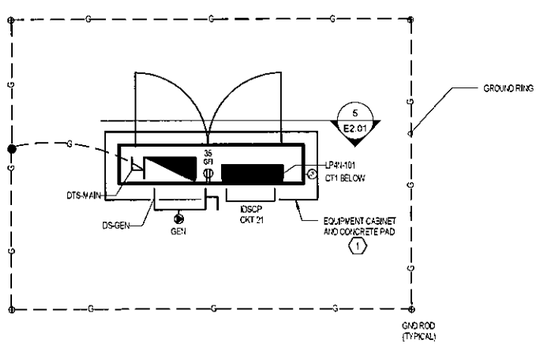

4 ELECTRICAL EQUIPMENT CABINET
1/2" = 1'-0"

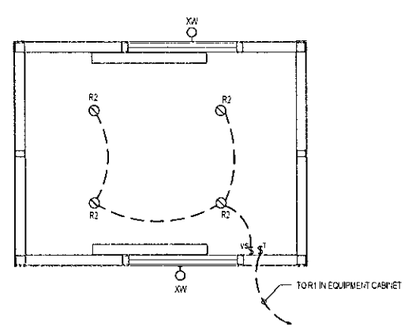

1 ELECTRICAL LIGHTING PLAN
1/2" = 1'-0"

GENERAL SHEET NOTES

A. REFER TO SECTION 13 3419 - PREMANUFACTURED BUILDING STRUCTURE FOR ELECTRICAL COMPONENTS IN TRAFFIC CHECK HOUSE.

B. REFER TO SECTION 26 0500 - BASIC ELECTRICAL REQUIREMENTS FOR COORDINATION BETWEEN CONTRACTOR AND MANUFACTURER OF PREMANUFACTURED BUILDING STRUCTURE.

C. REFER TO GROUNDING RISER DIAGRAM FOR GROUNDING ELECTRODE SYSTEM CONNECTIONS AND WIRE SIZES.

D. LOCATE GROUND RINGS 3'-0" TO 8'-0" FROM STRUCTURE. 30" BELOW GRADE.

KEYED SHEET NOTES

1. ELECTRICAL EQUIPMENT CABINET INCLUDES WEATHERPROOF ENCLOSURE WITH COMPONENTS INDICATED.
   A. 6" THICK CONCRETE PAD. 4" LARGER THAN PERIMETER OF ENCLOSURE. MOUNT IDSCP, DS-GEN AND GENERATOR RECEPTACLE ON EXTERIOR NORTH SIDE OF ENCLOSURE
2. CONTRACTOR TO PROVIDE MBG, TBG, GROUNDING ELECTRODE SYSTEM, AND GROUNDING AND FEEDER CONNECTIONS TO PANEL LP-W-102. DO NOT CONNECT MAIN BONDING JUMPER.

ELECTRICAL SYMBOL LEGEND

SYMBOL	DESCRIPTION
	RECESSED LIGHT FIXTURE (TYPE DENOTED)
	WALL MOUNT LIGHT FIXTURE (TYPE DENOTED)
	WALL SWITCH VACANCY SENSOR
	IN-WALL INTERVAL TIMER SWITCH
	DUPLEX RECEPTACLE
	DOUBLE DUPLEX (FOURPLEX) RECEPT.
	SPECIAL PURPOSE RECEPT.
	JUNCTION BOX
	INFORMATION OUTLET (VOICE/DATA)
	CEILING SPEAKER
	HORN TYPE SPEAKER
WP	WEATHERPROOF
GFI	GROUND FAULT CIRCUIT INTERRUPTER

LHB
PERFORMANCE DRIVEN DESIGN.
LHBcorp.com
21 W. Superior St., Ste 500 | Duluth, MN 55802 | 218.727.8446

CLIENT:
148th FIGHTER WING
MINNESOTA AIR NATIONAL GUARD

DULUTH IAP, MINNESOTA

THIS SQUARE APPEARS 1/2"x1/2" ON FULL SIZE SHEETS

NO	DATE	ISSUED FOR
	8/13/15	BID
	8/13/15	TYPE B3 FINAL SUBMITTAL

NO	DATE	REVISION

I HEREBY CERTIFY that this plan, specification or report was prepared by me or under my direct supervision and that I am a duly Licensed Professional Engineer under the laws of the State of Minnesota.

Signature: Michael Bilben
Typed or Printed Name: MICHAEL STEVEN BILBEN
Date: 8/13/15 Reg. No.: 51324

COPYRIGHT 2015 BY LHB, INC. ALL RIGHTS RESERVED.

PROJECT NAME:
RIDGEVIEW ROAD INFRASTRUCTURE

FMKM062039B

DRAWING TITLE:
ELECTRICAL BUILDING PLANS

FILE: Q:\120Proj\120094\600 Drawings\E\120094 Ridgeview Entry Road E14 Central.rvt
DRAWN BY: AML
CHECKED BY: LRH
PROJ. NO: 120094
DRAWING NO: E2.01

C:\Users\ds\Documents\120094 Ridgeview Entry Road E14 Central_LRHbemb.rvt
8/14/2015 1:56:48 PM

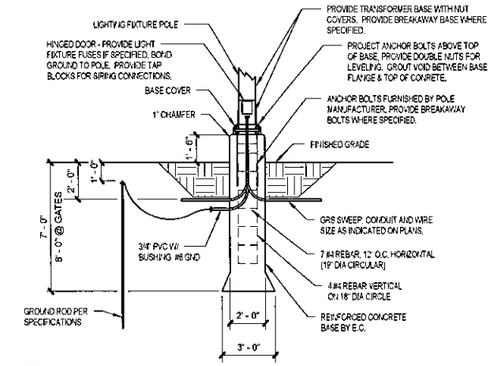

NOTES:

1. CONCRETE, MNDOT MIX No. 3Y43, AIR ENTRAINED 5000 PSI AFTER 28 DAYS. MAX AGGREGATE 3/4".
2. REINFORCEMENT, TYPE A-615 NEW BILLET STOCK A.S.T.M. GRADE 60.
3. IF THE ANTICIPATED FORECAST TEMPERATURE IS 35° OR LESS, THE BASE SHALL BE INSULATED WITH EITHER BLANKETS OR POLY AND STRAW FOR A MINIMUM OF 3 DAYS.

2 LIGHT POLE BASE DETAIL
1/4" = 1'-0"

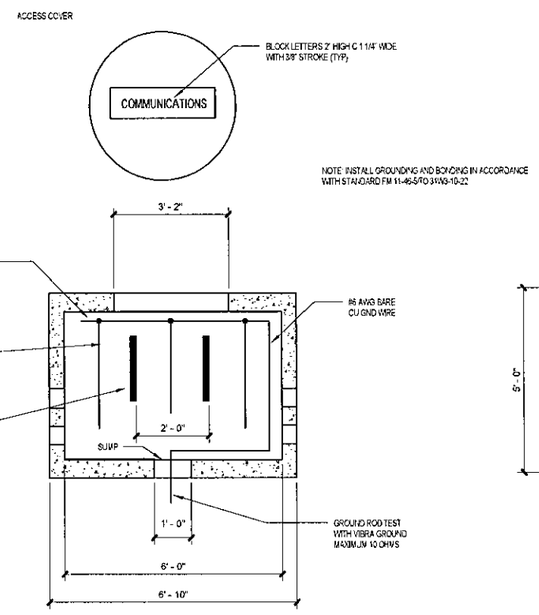

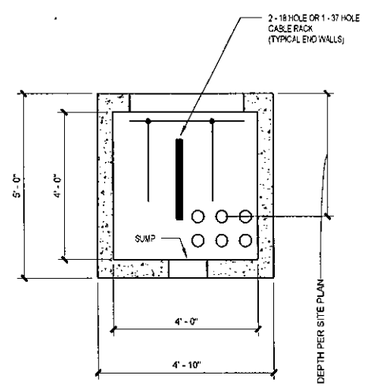

3 PRECAST HAND HOLE DETAIL
1/2" = 1'-0"

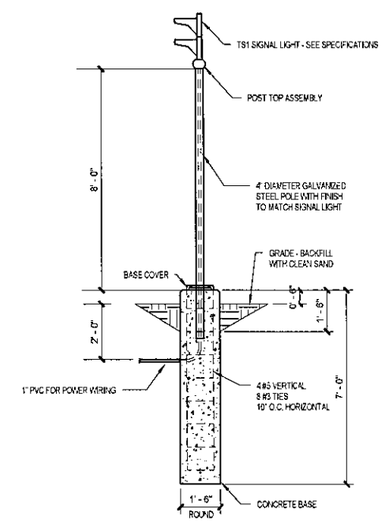

1 SIGNAL LIGHT AND POLE DETAIL
3/8" = 1'-0"

C:\Users\ldgs\Documents\120094 Ridgeview Entry Road E14 Central_LRH.rvt
8/14/2015 1:56:48 PM

LHB
PERFORMANCE DRIVEN DESIGN.
LHBcorp.com
21 W. Superior St., Ste 500 | Duluth, MN 55802 | 218.727.8446

CLIENT:
148th FIGHTER WING
MINNESOTA AIR
NATIONAL GUARD

DULUTH IAP, MINNESOTA

THIS SQUARE APPEARS 1/2"x1/2" ON FULL SIZE SHEETS

NO	DATE	ISSUED FOR
	8/13/15	BID
	8/13/15	TYPE B3 FINAL SUBMITTAL

NO	DATE	REVISION

I HEREBY CERTIFY that this plan, specification or report was prepared by me or under my direct supervision and that I am a duly Licensed Professional Engineer under the laws of the State of Minnesota.

Signature: Michael Bilben
Typed or Printed Name: MICHAEL STEVEN BILBEN
Date: 8/13/15 Reg. No.: 51324

COPYRIGHT 2015 BY LHB, INC. ALL RIGHTS RESERVED.

PROJECT NAME:
RIDGEVIEW ROAD INFRASTRUCTURE

FMKM062039B

DRAWING TITLE:
ELECTRICAL DETAILS

FILE: Q:\120Proj\120094\600 Drawings\E\120094 Ridgeview Entry Road E14 Central.rvt
DRAWN BY: AML
CHECKED BY: LRH
PROJ. NO. 120094
DRAWING NO. E7.01

ELECTRICAL EQUIPMENT SCHEDULE

NO.	DESCRIPTION	ROOM	LOAD HP	LOAD A	LOAD W	VOLT	PHASE	CONDUIT & WIRE SIZE	STARTER COMPONENT	CONTROL DEVICE COMPONENT	DISCONNECT COMPONENT	NOTES
BC-1	BARRIER CONTROLLER	CHECK HOUSE			250 W	120 V	1	41(1-1/4")C-2#10, #10 GND	PACKAGED EQUIPMENT	INTEGRAL	PANEL CB LOCKABLE	1, 4
BC-2	BARRIER CONTROLLER	CHECK HOUSE			250 W	120 V	1	41(1-1/4")C-2#10, #10 GND	PACKAGED EQUIPMENT	INTEGRAL	PANEL CB LOCKABLE	1, 4
BH-1	BARRIER HEATER HYDRAULIC UNIT	SITE			500 W	120 V	1	41(1-1/4")C-2#10, #10 GND	PACKAGED EQUIPMENT	INTEGRAL	PANEL CB LOCKABLE	1
BH-2	BARRIER HEATER HYDRAULIC UNIT	SITE			500 W	120 V	1	41(1-1/4")C-2#10, #10 GND	PACKAGED EQUIPMENT	INTEGRAL	PANEL CB LOCKABLE	1
BH-3	BARRIER HEATER BARRIER VAULT	SITE			1400 W	208 V	1	41(1-1/4")C-2#10, #10 GND	PACKAGED EQUIPMENT	INTEGRAL	PANEL CB LOCKABLE	2, 3
GEN	GENERATOR	SITE			60000 W	208 V	3	53(2")C-4#3/0, #6 gnd	--	INTEGRAL	WP 200A, 4P.	
GT-1	CANTILEVERED GATE	SITE		3 A		120 V	1	21(3/4")C-2#10, #10 GND	PACKAGED EQUIPMENT	GATE CONTROLLER	WITH CONTROLLER	
GT-2	CANTILEVERED GATE	SITE		3 A		120 V	1	21(3/4")C-2#10, #10 GND	PACKAGED EQUIPMENT	GATE CONTROLLER	WITH CONTROLLER	
HPU-1	HYDRAULIC UNIT BARRIER GATE	SITE	3 HP			208 V	3	41(1-1/4")C-3#10, #10 GND	PACKAGED EQUIPMENT	BARRIER CONTROLLER	WITH CONTROLLER	1, 4
HPU-2	HYDRAULIC UNIT BARRIER GATE	SITE	3 HP			208 V	3	41(1-1/4")C-3#10, #10 GND	PACKAGED EQUIPMENT	BARRIER CONTROLLER	WITH CONTROLLER	1, 4
HVAC	TRAFFIC CHECK HOUSE HVAC UNIT	CHECK HOUSE		14.4 A		240 V	1	21(3/4")C-2#12, #12 GND	PACKAGED EQUIPMENT	INTEGRAL	CORD & PLUG NEMA 6-20R	3,5
UPS	UNINTERRUPTIBLE POWER SUPPLY	CHECK HOUSE			2700 W	120 V	1	21(3/4")C-2#10, #10 GND	--	--	CORD & PLUG NEMA L5-30R	5

STARTER TYPES:

FVNR	FULL VOLTAGE NON-REVERSING
FVR	FULL VOLTAGE REVERSING
2-SPD	TWO SPEED
VFD	VARIABLE FREQUENCY DRIVE
RVS	REDUCED VOLTAGE

COMBINATION DISCONNECT TYPES:

FS	FUSED SWITCH
NFS	NON-FUSED SWITCH
MCP	MOTOR CIRCUIT PROTECTOR
CB	CIRCUIT BREAKER

CONTROL DEVICES:

HOA	HAND-OFF-AUTO SWITCH
RP	RED (RUN) PILOT LIGHT
GP	GREEN (POWER) PILOT LIGHT
O/O	ON-OFF SELECTOR SWITCH
S/S	STOP-START PUSHBUTTONS

ABBREVIATIONS:

EC	ELECTRICAL CONTRACTOR
MC	MECHANICAL CONTRACTOR
GC	GENERAL CONTRACTOR
TC	TEMPERATURE CONTROL
OWN	OWNER

NOTES:

1. SHARES HOME RUN CONDUIT HPU-1, BC-1, AND BH-1.
2. SHARES HOME RUN CONDUIT. (2) BH-2 AND TRAFFIC SIGNAL CIRCUIT.
3. 240 VOLT EQUIPMENT OPERATING AT 208 VOLTS.
4. INTERFACE HYDRAULIC UNIT CONTROLLER WITH REMOTE CONTROL STATION IN TRAFFIC CHECK HOUSE.
5. RECEPTACLE PROVIDED WITH PRE-MANUFACTURED TRAFFIC CHECK HOUSE.

CONTACTOR SCHEDULE

CONT NO.	CONT RATING	POLES	COIL VOLT	TYPE	ENCLOSURE	CONTROL TYPE	CONTROL LOCATION	SOURCE	CIRCUIT NO.	LOAD DESCRIPTION	NOTES
CT1	30 A	4	120 V	ELECTRICALLY HELD	NEMA 1 SURFACE	PHOTOCELL	EXTERIOR	LP4N-101	8, 10	LITES - EXTERIOR	1
R1	30 A	1	120 V	ELECTRICALLY HELD	NEMA 1	DIGITAL TIME SWITCH	TRAFFIC CHECK HOUSE	LP4N-101	8	LITES - EXTERIOR BH-LEVEL	

SCHEDULE NOTES:

1. REFER TO EXTERIOR LIGHTING CONTROL DIAGRAM.

SAFETY AND SECURITY DEVICE SCHEDULE

SYMBOL	DESCRIPTION	MANUFACTURER	MODEL NO.	NOTES
HD DUR	DURESS PUSHBUTTON HOLD-UP SWITCH: SELF LOCKING WITH KEY RESET, SILENT OPERATION, AND STAINLESS STEEL HOUSING.	MONACO	519-000-00	1
M	MAGNETIC LOCK: SURFACE - DOUBLE STANDARD MAGNET UNMONITORED HOLDING FORCE 1500 LBS, 12VDC, STAINLESS STEEL, WEATHERPROOF	DURAGATE	SS-1500-G	
HID R	CARD READER: WEATHER RESISTANT PROXIMITY CARD READER WITH INTEGRAL KEYPAD AND OPERATION DISTANCE UP TO 254mm 10 INCHES.	VINDICATOR	574-32742-00	
WIDE GAP DS	BALANCED MAGNETIC SWITCH: HIGH SECURITY BALANCED MAGNETIC SWITCH, SPDT, FACTORY COMPENSATED FOR THE EFFECTS OF STEEL, WIDE GAP	VINDICATOR	192-30884-00	
IDSCP	INTRUSION DETECTION SYSTEM CONTROL PANEL	VINDICATOR	SEE SECTION 28 1600	

SCHEDULE NOTES:

1. PROVIDE LOCK CYLINDER AND KEYS TO MATCH EXISTING DURESS PUSHBUTTONS.

GROUND BAR SCHEDULE

TYPE	DESCRIPTION	NOTES
MEG	MAIN BUILDING GROUND 6.35mm (1/4") THICK x 50.88mm (2") WIDE x 457mm (18") LONG COPPER GROUND BAR.	1
TGB	TELECOMMUNICATIONS GROUND BAR 6.35mm (1/4") THICK x 50.88 (2") WIDE X 305mm (12") LONG COPPER GROUND BAR. DRILLED AND TAPPED PER SPECIFICATIONS.	1

SCHEDULE NOTES:

1. PROVIDE ALL FITTINGS NECESSARY FOR A COMPLETE INSTALLATION.

LIGHTING CONTROL DEVICE SCHEDULE

TYPE	DESCRIPTION	MANUFACTURER	CATALOG No.	VOLTS	NOTES
PC	PHOTOCELL: AUTOMATICALLY TURNS LIGHTS ON AND OFF IN RESPONSE TO NATURAL DAYLIGHT	TORK	2005A	120 V	
T	IN-WALL INTERVAL TIMER: DIGITAL DISPLAY, AUTOMATICALLY TURNS LIGHTS OFF AT PRESET TIME DELAY.	WATTSTOPPER	TS-400-24	24 V	1, 2, 3
VS	WALL SWITCH VACANCY SENSOR: AUTOMATICALLY TURNS LIGHTS OFF AFTER TIME DELAY, MANUAL ON REQUIRED.	WATTSTOPPER	CS-50-W	120 V	1, 3

SCHEDULE NOTES:

1. PROVIDE DEVICE TO MATCH OPERATING VOLTAGE OF LOADS CONTROLLED.
2. PROVIDE 24 VDC POWER PACK WITH INPUT TO MATCH LIGHTING FIXTURE VOLTAGE. SWITCHING CONTACT RATED FOR 20A. BALLAST.
3. PROVIDE STAINLESS STEEL WALL PLATE.

LIGHTING CONTROLS SEQUENCE OF OPERATIONS SCHEDULE

ROOM	OPERATION
BLDG EXTERIOR	LIGHT FIXTURE INTEGRATED PHOTOCELL TURNS LIGHTS ON AND OFF DUSK TO DAWN.
BLDG INTERIOR	VACANCY SENSOR TURNS LIGHTS OFF AFTER SPACE IS UNOCCUPIED FOR ONE HOUR, MANUAL ON REQUIRED.
SITE AREA	PHOTOCELL OR BYPASS SWITCH TURNS LIGHTS ON TO 30%. IN-WALL INTERVAL TIMER OVERRIDES LIGHTS ON TO 100% FOR ONE HOUR. INDIVIDUAL INTEGRATED LIGHT FIXTURE MOTION SENSORS TURN INDIVIDUAL POLE LIGHTS ON TO 100% FOR 30 MINUTES.

LIGHTING FIXTURE SCHEDULE

TYPE	Description	LENS-LOUVER	MOUNTING	LAMP	DRIVER	VOLT	WATT	MFR	CATALOG SERIES	NOTE
R2	PREMANUFACTURED BUILDING: 6" DIAMETER DIMMABLE LED DOWNLIGHT WITH REMOTE PHOSHOR LENS ASSEMBLY.	PHOSPHOR LENS ASSEMBLY AND COMFORT CLEAR DIFFUSE REFLECTOR	RECESSED	LED 2200lm 4100K 60000 HR	0-10 VDC DIMMABLE LED DRIVER	120 V	32 W	GOTHAM	EVO R 4A 22 8AR MVOLT	3
TS1	TRAFFIC SIGNAL FURNISHED WITH GATE EQUIPMENT INSTALLED BY CONTRACTOR	-	POST			120 V	40 W	WITH EQUIPMENT	WITH EQUIPMENT	2
X1T4L18 SSA20	LOW PROFILE LED AREA LIGHT, CAST ALUMINUM HOUSING, TYPE 4 MEDIUM DISTRIBUTION, BRONZE FINISH. (1) FIXTURE ON POLE, TRANSFORMER BASE, WITH INTEGRAL MOTION SENSOR FOR BH-LEVEL 30% - 100% OPERATION.	-	20' SQUARE STRAIGHT ALUMINUM POLE	LED 18,200lm 70+CRI 4000K L70 150,000 HR	LED DRIVER BH-LEVEL	208 V	209 W	LITHONIA	DSX1LED-80C-1000-40 K-T4M-208-SPA-PIRH-D DBXD	1,4
XW	PREMANUFACTURED BUILDING: EXTERIOR LED WALL PACK, CAST ALUMINUM HOUSING, TYPE 3 DISTRIBUTION, BRONZE FINISH, WITH INTEGRAL PHOTOCELL.	CLEAR TEMPERED GLASS	WALL	LED 4200lm 70+ CRI 4000K L90 100,000 HR	LED DRIVER	120 V	55 W	BETA-LED	SEC-EDG-3M-WM-04-D-12-BZ-350-P	3

BALLAST TYPES:

IS-LBF	INSTANT START LOW BALLAST FACTOR	PS-LBF	PROGRAMMED START LOW BALLAST FACTOR	ARD-LBF	ARCHITECTURAL DIMMING 3-WIRE 1-100%
IS-NBF	INSTANT START NORMAL BALLAST FACTOR	PS-LBF	PROGRAMMED START NORMAL BALLAST FACTOR	ESD-NBF	ENERGY SAVING DIMMING 2-WIRE 5-100%
IS-HBF	INSTANT START HIGH BALLAST FACTOR	PS-HBF	PROGRAMMED START HIGH BALLAST FACTOR	DHD-LBF	DAYLIGHT HARVESTING DIMMING 0-10 VDC, 5-100%
RS-NBF	RAPID START NORMAL BALLAST FACTOR	PS-NBF-2	PROGRAMMED START NORMAL BALLAST FACTOR 2-STEP		

GENERAL NOTES:

A. CONTRACTOR SHALL REFER TO SPECIFICATIONS REGARDING PROVIDING ADDITIONAL SPARE LAMPS, LENSES, AND GLOBES.

SCHEDULE NOTES:

1. NO SUBSTITUTIONS PERMITTED.
2. TRAFFIC SIGNAL FURNISHED WITH POP-UP BARRIER EQUIPMENT INSTALLED BY CONTRACTOR.
3. LIGHT FIXTURE PROVIDED WITH TRAFFIC CHECK HOUSE PRE-MANUFACTURED STRUCTURE.
4. PROVIDE TRANSFORMER BASE FOR LIGHT POLE WITH ACCESS FOR CONDUIT, FITTINGS, AND WIRING COMPONENTS. PROVIDE FUSES.

PANELBOARD: LP4N-101

LOCATION:
MOUNTING: SURFACE NEMA1
MAIN DEVICE: 100 A MLO
BUS AMPS: 100 AMPS
VOLTAGE: 208Y/120 V, 3 ø 4 W.
A.I.C. RATING: 10,000 AMPS SYMMETRICAL
SPECIAL:

LOAD DESCRIPTION	BKR	POLES	CKT	PHASE A KVA		PHASE B KVA		PHASE C KVA		CKT	POLES	BKR	LOAD DESCRIPTION
HPU-1	20 A	3	1	0.0	5.7					2	3	20 A	LP4N-102
--	--	--	3			0.0	1.7			4	--	--	--
--	--	--	5					0.0	0.2	6	--	--	--
HPU-2	20 A	3	7	0.0	0.6					8	2	20 A	LITES
--	--	--	9			0.0	0.6			10	--	--	--
--	--	--	11					0.0	0.5	12	1	20 A	GT-2
BH-3	20 A	2	13	1.6	0.6					14	1	20 A	GT-1
--	--	--	15			0.0	0.0			16	1	0 A	SPARE
BH-3	20 A	2	17					1.6	0.0	18	1	0 A	SPARE
--	--	--	19	0.0	0.0					20	1	0 A	SPARE
TRAFFIC SIGNALS	20 A	1	21			0.1	0.0			22	1	0 A	SPARE
BH-1	20 A	1	23					0.6	0.0	24	1	0 A	SPARE
BC-1	20 A	1	25	0.3	0.0					26	--	--	SPACE & PROVISION
BH-2	20 A	1	27			0.6	0.0			28	--	--	SPACE & PROVISION
BC-2	20 A	1	29					0.3	0.0	30	1	30 A	SPD
IDSCP	20 A	1	31	0.2	0.0					32	--	--	SPACE & PROVISION
LIGHTING CONTROL	20 A	1	33			0.0	0.0			34	--	--	SPACE & PROVISION
RCPT EQ CABINET	20 A	1	35					0.2	0.0	36	--	--	SPACE & PROVISION
SPACE & PROVISION	--	--	37	0.0	0.0					38	--	--	SPACE & PROVISION
SPACE & PROVISION	--	--	39			0.0	0.0			40	--	--	SPACE & PROVISION
SPACE & PROVISION	--	--	41					0.0	0.0	42	--	--	SPACE & PROVISION
	TOTAL LOAD:			9 kVA		3 kVA		3 kVA					
	TOTAL AMPS:			75 A		25 A		29 A					

LOAD CLASSIFICATION	CONNECTED	DEMAND	ESTIMATED	PANEL TOTALS	
Other	3120 VA	100.00%	3120 VA		
RCPT	900 VA	100.00%	900 VA	CONNECTED LOAD:	15287 VA
LITES	1453 VA	125.00%	1817 VA	ESTIMATED DEMAND:	15740 VA
COMP	3984 VA	100.00%	3984 VA	CONNECTED CURRENT:	42 A
MTR	720 VA	112.50%	810 VA	EST. DEMAND CURRENT:	44 A
SPEC	5110 VA	100.00%	5110 VA		

NOTES:
1. PROVIDE HANDLE PADLOCK ATTACHMENTS FOR CIRCUITS 7, 9, 11, 13, 17

PANELBOARD: LP4N-102

REFER TO SPECIFICATION
SECTION 13 3419

ENCLOSED SWITCH SCHEDULE

IDENTIFICATION	TYPE	SIZE	POLES	FUSE	KVA	LOAD SERVED	NOTES
DS-GEN	NFS	200	4	--	60.0	DTS-MAIN OPT. STANDBY	1
DTS-MAIN	DT FS	200	3	100	14.4	PANEL LP4N-101	2

SCHEDULE NOTES:

1. NEMA 3R WEATHERPROOF ENCLOSURE. FINISH BASE STANDARD BROWN.
2. DOUBLE THROW SWITCH SUITABLE FOR USE AS SERVICE EQUIPMENT.

LHB
PERFORMANCE DRIVEN DESIGN.
LHBcorp.com
21 W. Superior St., Ste 500 | Duluth, MN 55802 | 218.727.6446

CLIENT:
148th FIGHTER WING
MINNESOTA AIR NATIONAL GUARD

DULUTH IAP, MINNESOTA

THIS SQUARE APPEARS 1/2"x1/2" ON FULL SIZE SHEETS

NO	DATE	ISSUED FOR
	8/13/15	BID
	8/13/15	TYPE B3 FINAL SUBMITTAL

NO	DATE	REVISION

I HEREBY CERTIFY that this plan, specification or report was prepared by me or under my direct supervision and that I am a duly Licensed Professional Engineer under the laws of the State of Minnesota.

Signature: Michael Bilben
Typed or Printed Name: MICHAEL STEVEN BILBEN
Date: 8/13/15 Reg. No.: 51324

COPYRIGHT 2015 BY LHB, INC. ALL RIGHTS RESERVED.

PROJECT NAME:
RIDGEVIEW ROAD INFRASTRUCTURE

FMKM062039B

DRAWING TITLE:
ELECTRICAL SCHEDULES

FILE: Q:\12Proj\120084\600 Drawings\E\120094 Ridgeview Entry Road E14 Central.rvt
DRAWN BY: AVI.
CHECKED BY: LRH
PROJ. NO: 120094
DRAWING NO.
E8.01

C:\Users\dj\Documents\120094 Ridgeview Entry Road E14 Central_LRHsemb.rvt
8/14/2015 1:56:49 PM

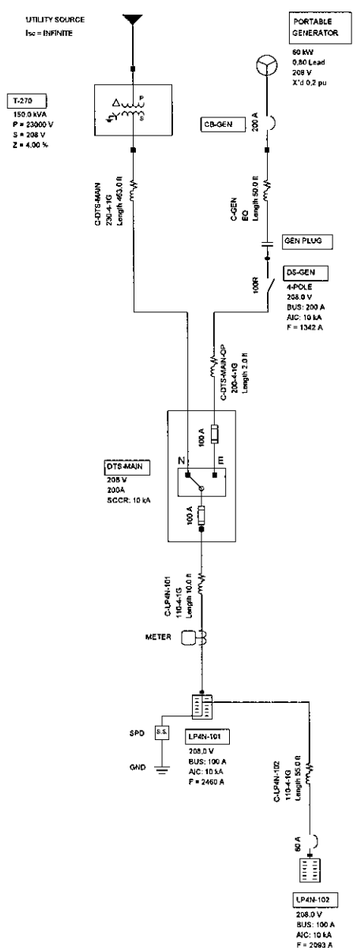

4 SINGLE LINE DIAGRAM
NO SCALE

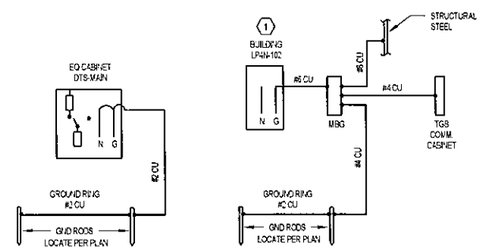

3 GROUNDING RISER DIAGRAM
NO SCALE

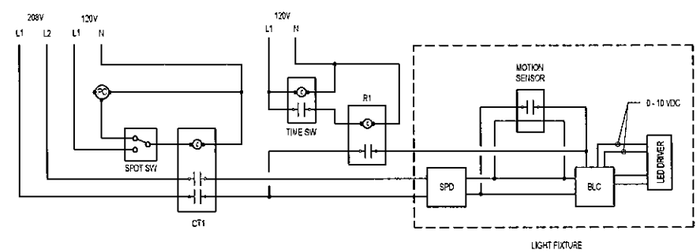

2 EXTERIOR LIGHTING CONTROL DIAGRAM
NO SCALE

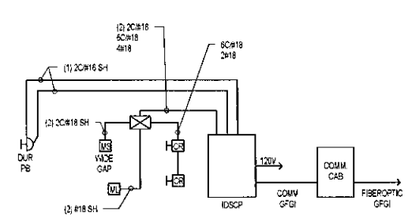

1 INTRUSION DETECTION AND ACCESS CONTROL WIRING DIAGRAM
NO SCALE

CONDUIT AND WIRE SCHEDULE

FEEDER TYPE	COPPER CONDUCTORS		CONDUIT SIZE			
	Ø & N	GND	2Ø+N+GND	3Ø+GND	3Ø+N+GND	3Ø+2N+2GND
110	#1	#6	41 (1 1/2")	41 (1 1/2")	41 (1 1/2")	53 (2")
200	#3/0	#6	53 (2")	53 (2")	53 (2")	63 (2 1/2")
230	#4/0	#4	53 (2")	53 (2")	63 (2 1/2")	63 (2 1/2")
EQ	EQUIPMENT FEEDER - REFER TO ELECTRICAL EQUIPMENT SCHEDULE					

200 - 4 - 1G — FEEDER DESIGNATION

- GROUND CONDUCTORS:
  - (0) - NO GROUND
  - (1G) - EQUIPMENT OR ISOLATED GND
  - (2G) - EQUIPMENT GND AND ISOLATED GND
- SYSTEM DESCRIPTION:
  - (3) - 1Ø 3W OR 3Ø 3W
  - (4) - 3Ø 4W
  - (5) - 3Ø 5W (2 NEUTRALS)
- CONDUCTOR AMPACITY:
  - (SEE FEEDER SCHEDULE)

GENERAL NOTES:

A. THE ABOVE FEEDER SCHEDULE IS A SCHEDULE OF TYPICAL FEEDERS AND SOME SIZES MAY NOT BE UTILIZED.

B. ALL CONDUCTOR AMPACITIES ARE BASED ON TABLE 310-15(b)(16) OF THE NEC FOR COPPER CONDUCTOR TYPE THWN/THHN.

C. FEEDER SIZES SHOWN ON THE RISER DIAGRAM INDICATE FEEDER AMPACITIES AND DO NOT NECESSARILY CORRESPOND TO CIRCUIT BREAKER AMPACITIES. CERTAIN FEEDERS MAY BE SIZED FOR THE DERATION FACTORS REQUIRED BY CODE AND/OR ARE OVERSIZED FOR VOLTAGE DROP.

D. WHERE MULTIPLE CONDUITS AND CONDUCTORS ARE INDICATED FOR A SINGLE FEEDER EACH CONDUIT SHALL CONTAIN 1 PARALLEL PHASE, NEUTRAL AND GROUND CONDUCTORS INDICATED.

E. CONDUIT ABOVE GRADE INDOORS SHALL BE EMT. CONDUIT ABOVE GRADE OUTDOORS SHALL BE GALVANIZED IMC OR RMC. CONDUIT BELOW GRADE SHALL BE PVC WITH GALVANIZED RMC ELBOWS. CONDUIT SIZE INDICATED IS MINIMUM SIZE REGARDLESS OF CONDUIT TYPE.

F. CONDUITS SIZED LARGER THAN INDICATED SHALL BE PERMITTED FOR RUNS WITH UP TO (4) 90° ELBOWS, OR FOR PULLING LONGER RUNS.

GENERAL SHEET NOTES

A. OVERCURRENT DEVICES OF ENTIRE DISTRIBUTION SYSTEM SHALL MEET STATED FAULT CURRENT VALUES WITH FULLY RATED EQUIPMENT.

B. CONDUCTOR LENGTHS INDICATED ON THE SINGLE LINE DIAGRAM ARE FOR FAULT CURRENT CALCULATIONS ONLY. ACTUAL LENGTH SHALL BE DETERMINED BY FIELD CONDITIONS AND ACTUAL ROUTES OF FEEDERS.

C. REFER TO PANELBOARD AND ENCLOSED SWITCH SCHEDULES FOR ADDITIONAL REQUIREMENTS. WHERE A DISCREPANCY EXISTS BETWEEN EQUIPMENT ON THE SINGLE LINE DIAGRAM AND THE DETAILED SCHEDULES, THE ITEM OR ARRANGEMENT WITH BETTER QUALITY, GREATER QUANTITY, OR HIGHER COST SHALL BE USED.

D. ALL DISCREPANCIES SHALL BE BROUGHT TO THE ATTENTION OF THE ENGINEER.

E. REFER TO THE MOTOR AND SPECIAL CONNECTION SCHEDULE FOR ALL FEEDERS DESIGNATED 'EQ'.

F. GROUNDING ELECTRODE CONDUCTORS SIZES ARE NOT INDICATED ON THE SINGLE LINE DIAGRAM. REFER TO THE GROUNDING RISER DIAGRAM FOR CONNECTIONS AND CONDUCTOR SIZES.

KEYED SHEET NOTES

1. MAIN BONDING JUMPER AT LP4N-102 NOT PERMITTED.

LHB
PERFORMANCE DRIVEN DESIGN.
LHBcorp.com
21 W. Superior St., Ste 500 | Duluth, MN 55802 | 218.727.8446

CLIENT:
148th FIGHTER WING
MINNESOTA AIR NATIONAL GUARD

DULUTH IAP, MINNESOTA

THIS SQUARE APPEARS 1/2"x1/2" ON FULL SIZE SHEETS

NO	DATE	ISSUED FOR
	8/13/15	BID
	8/13/15	TYPE B3 FINAL SUBMITTAL

NO	DATE	REVISION

I HEREBY CERTIFY that this plan, specification or report was prepared by me or under my direct supervision and that I am a duly Licensed Professional Engineer under the laws of the State of Minnesota.

Signature: Michael Bilben
Typed or Printed Name: MICHAEL STEVEN BILBEN
Date: 8/13/15 Reg. No. 51324

COPYRIGHT 2015 BY LHB, INC. ALL RIGHTS RESERVED.

PROJECT NAME:
RIDGEVIEW ROAD INFRASTRUCTURE

FMKM062039B

DRAWING TITLE:
ELECTRICAL DIAGRAMS

FILE: Q:\12Proj\120094\600 Drawings\E\120094 Ridgeview Entry Road E14 Central.rvt
DRAWN BY: AWL
CHECKED BY: LRH
PROJ. NO: 120094
DRAWING NO:

E9.01

C:\Users\dfs\Documents\120094 Ridgeview Entry Road E14 Central_LRHtemb.rvt
8/14/2015 1:56:50 PM